SPECTRUM DESIGN
architects | engineers

Plaza Suite 1
10 Church Avenue, SE
Roanoke, VA 24011

540.342.6001
spectrumpc.com

BEDFORD COUNTY SHERIFF'S OFFICE EXPANSION

1345 FALLING CREEK ROAD | BEDFORD, VA 24523

PROJECT PHASE:
BID DOCUMENTS

PROJECT DATE:
05.04.2026

SPECTRUM DESIGN PROJECT NO.:
24112

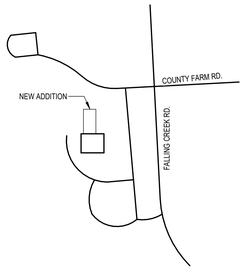

N **PROJECT LOCATION**
SCALE: N.T.S.

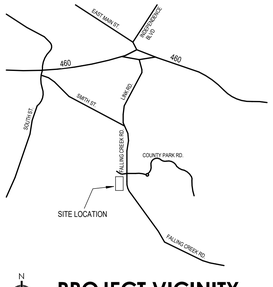

N **PROJECT VICINITY**
SCALE: N.T.S.

INDEX OF DRAWINGS:

GENERAL
------ COVER SHEET

LIFE SAFETY
LS001 BUILDING CODE SUMMARY & LIFE SAFETY PLANS

CIVIL
C001 GENERAL NOTES & LEGEND
C101 EXISTING CONDITIONS & DEMOLITION PLAN
C102 DIMENSIONAL LAYOUT & UTILITY PLAN
C103 GRADING & DRAINAGE PLAN
C104 SIGNAGE & PAVEMENT MARKING PLAN
C201 EROSION & SEDIMENT CONTROL PLAN
C202 EROSION & SEDIMENT CONTROL DETAILS
C203 EROSION & SEDIMENT CONTROL DETAILS
C204 EROSION & SEDIMENT CONTROL NOTES
C301 STORM SEWER PROFILES & STORMWATER MANAGEMENT PLAN
C302 STORM SEWER DETAILS
C501 DETAILS

STRUCTURAL
S001 GENERAL NOTES
S002 TYPICAL DETAILS
S003 TYPICAL DETAILS
S101 FOUNDATION PLAN
S102 FLOOR FRAMING PLAN
S103 ROOF FRAMING PLAN
S501 SECTIONS AND DETAILS
S502 SECTIONS AND DETAILS
S601 SCHEDULES

ARCHITECTURAL
A001 GENERAL ARCHITECTURAL INFORMATION & DEMOLITION PLAN
A002 PARTITION TYPES, EXTERIOR WALL & ROOF ASSEMBLIES
A003 UL ASSEMBLIES & JOINT / PENETRATION DETAILS
A100 ARCHITECTURAL SITE PLAN
A101 MAIN FLOOR PLAN
A102 LOWER FLOOR PLAN
A121 REFLECTED CEILING PLANS
A151 ROOF PLAN
A201 EXTERIOR ELEVATIONS
A301 BUILDING SECTIONS
A311 WALL SECTIONS
A312 WALL SECTIONS
A321 WALL DETAILS
A401 ENLARGED TOILET ROOM PLANS & ELEVATIONS
A411 VERTICAL CIRCULATION PLANS, SECTIONS, & DETAILS
A601 DOOR AND ROOM FINISH SCHEDULE
A602 HEAD, JAMB, & SILL DETAILS
A701 FINISH PLANS
A702 TILE ELEVATIONS, FLOOR TRANSITIONS, & SIGNAGE
A711 CASEWORK ELEVATIONS & DETAILS

PLUMBING
P001 PLUMBING LEGEND, DETAILS AND NOTES
P101 FLOOR PLANS - PLUMBING
P201 ENLARGED FLOOR PLANS - PLUMBING

MECHANICAL
MD101 DEMOLITION FLOOR PLANS - HVAC
M001 HVAC LEGEND, NOTES, AND SCHEDULES
M002 HVAC DETAILS
M101 FLOOR PLANS - HVAC
M201 ROOF PLAN - HVAC

ELECTRICAL
ED101 DEMOLITION FLOOR PLANS - ELECTRICAL
E001 ELECTRICAL LEGEND, ABBREVIATIONS,AND NOTES
E002 ELECTRICAL DETAILS
E003 ELECTRICAL GROUNDING SCHEMATICS
E004 ELECTRIC SITE PLAN
E101 FLOOR PLANS - LIGHTING
E102 LIGHTING CONTROLS - SEQUENCE OF OPERATIONS
E201 FLOOR PLANS - POWER
E202 FLOOR PLANS - MECHANICAL & PLUMBING - POWER
E301 FLOOR PLANS - COMMUNICATIONS
E401 FLOOR PLANS - FIRE ALARM
E501 EXISTING ELECTRICAL RISER DIAGRAM
E502 NEW ELECTRICAL RISER DIAGRAM
E601 EXISTING ELECTRICAL PANELS
E602 EXISTING ELECTRICAL PANELS
E603 NEW ELECTRICAL PANELS
E604 NEW ELECTRICAL PANELS
E605 NEW ELECTRICAL PANELS

BID DOCUMENTS | 05.04.2026

BEDFORD COUNTY
SHERIFF'S OFFICE
EXPANSION

SPECTRUM DESIGN | PROJECT NUMBER : 24112

5/1/2026 3:05:49 AM

GENERAL PROJECT INFORMATION

SITE INFORMATION

TAX MAP NO.: 147-A-40
ZONING: AP: AGRICULTURAL / RURAL PRESERVE DISTRICT
FLOOD ZONE: N/A
PERMIT AUTHORITY: COUNTY OF BEDFORD

OWNER INFORMATION

OWNER/AUTHORIZED AGENT:
DOUGLAS COFFMAN
DIRECTOR OF PUBLIC WORKS
PHONE: (540) 586-7601 x1392
EMAIL:DCOFFMAN@BEDFORDCOUNTYVA.GOV

OWNER'S ADDRESS:
122 E. MAIN STREET, SUITE 202
BEDFORD VA 24523

PROJECT NAME: BEDFORD COUNTY SHERIFF'S OFFICE EXPANSION

PROJECT ADDRESS: 1345 FALLING CREEK ROAD BEDFORD, VA 24523

LEAD DESIGN PROFESSIONALS

DISCIPLINE	FIRM	NAME	LICENSE	TELEPHONE
CIVIL	SPECTRUM DESIGN	MICHAEL RAKES	28199	540.342.6001
STRUCTURAL	SPECTRUM DESIGN	RONALD RODKEY	33689	540.342.6001
ARCHITECTURAL	SPECTRUM DESIGN	TRAVIS ROOKSTOOL	17288	540.342.6001
PLUMBING	LAWRENCE PERRY ASSOCIATES	RICHARD HUGHES	45688	540.342.1816
MECHANICAL	LAWRENCE PERRY ASSOCIATES	RICHARD HUGHES	45688	540.342.1816
ELECTRICAL	LAWRENCE PERRY ASSOCIATES	WINSTON MATTHEWS	44469	540.342.1816

PROJECT CODE SUMMARY

PROJECT DESCRIPTION

THE PROJECT IS GENERALLY DESCRIBED AS A NEW TWO STORY ADDITION TO AN EXISTING SHERIFF'S OFFICE WITH OFFICE SPACES, STORAGE SPACES, BREAK ROOM, AND EMERGENCY OPERATIONS CENTER. RENOVATIONS IN EXISTING BUILDING CONSIST PRIMARILY OF RECONFIGURING EXISTING ROOMS TO CREATE NEW OFFICE SPACES. NO CORRECTIONAL DETAINMENT AREAS OR ANY OTHER INSTITUTIONAL USE ARE PRESENT IN EXISTING BUILDING OR NEW ADDITION.

CHAPTER 1: ADMINISTRATION - APPLICABLE BUILDING CODES

2021 VIRGINIA CONSTRUCTION CODE (VCC)
2021 VIRGINIA PLUMBING CODE (VPC)
2021 VIRGINIA MECHANICAL CODE (VMC)
2021 VIRGINIA ENERGY CONSERVATION CODE (VECC), CLIMATE ZONE 4A
2021 VIRGINIA STATEWIDE FIRE PREVENTION CODE (VSFPC)
2020 NATIONAL ELECTRICAL CODE (NFPA 70)
2019 STANDARD FOR INSTALLATION OF SPRINKLER SYSTEMS (NFPA 13)
2019 NATIONAL FIRE ALARM AND SIGNALING CODE (NFPA 72)
2017 STANDARD FOR ACCESSIBLE AND USABLE BUILDINGS AND FACILITIES (ANSI 117.1)

CHAPTER 3: USE AND OCCUPANCY CLASSIFICATION

USE GROUPS: B - BUSINESS (SECTION 304)

SECONDARY USE GROUP(S): A - ASSEMBLY (SECTION 303) S - STORAGE (SECTION 311)

CHAPTER 4: SPECIAL DETAILED REQUIREMENTS BASED ON OCCUPANCY: N/A

CHAPTER 5: GENERAL BUILDING HEIGHTS & AREAS

MIXED USE AND OCCUPANCY: NONSEPARATED MIXED USE OCCUPANCIES (SECTION 508.3)

BUILDING HEIGHT ALLOWABLE (TABLE 504.3): 60 FT (SM) MOST RESTRICTIVE
BUILDING HEIGHT PROVIDED: 40 FT

NUMBER OF STORIES ALLOWABLE (TABLE 504.4): 2 STORIES (SM) MOST RESTRICTIVE
NUMBER OF STORIES PROVIDED: 2 STORIES

ALLOWABLE AREA FACTOR (TABLE 506.2)
USE GROUP A3: 18,000 SF TABULAR AREA PER STORY (SM)
USE GROUP B,S: 27,000 SF TABULAR AREA PER STORY (SM)

BUILDING AREA ALLOWED PER STORY: 18,000 SF (MOST RESTRICTIVE)
BUILDING AREA PROVIDED PER STORY: 13,706 SF MAIN FLOOR
13,622 SF LOWER FLOOR

TOTAL BUILDING AREA ALLOWED: 45,000 SF
TOTAL BUILDING AREA PROVIDED: 27,328 SF

CHAPTER 6: TYPE OF CONSTRUCTION

CONSTRUCTION TYPE (SECTION 602): VB (UNPROTECTED, NONCOMBUSTIBLE)

FIRE-RESISTANCE RATING REQUIREMENTS FOR BUILDING ELEMENTS (TABLE 601)

PRIMARY STRUCTURAL FRAME: 0 HR

BEARING WALLS
EXTERIOR: 0 HR
INTERIOR: 0 HR

NONBEARING WALLS
EXTERIOR: 0 HR
INTERIOR: 0 HR

FLOOR CONSTRUCTION: 0 HR

ROOF CONSTRUCTION: 0 HR

CHAPTER 7: FIRE & SMOKE PROTECTION FEATURES

FIRE-RESISTANCE RATING REQUIREMENTS FOR EXTERIOR WALLS (TABLE 705.5)
(X = DISTANCE TO PROPERTY LINE)

X ≥ 30 FT: 0 HR

		DOOR RATING (TABLE 716.1.2)
FIRE WALLS (SECTION 706):	N/A	
FIRE BARRIERS (SECTION 707):	N/A	
FIRE SEPARATION ASSEMBLIES		
EXIT STAIR (SECTION 1019, 1023):	1 HR	60 MIN
SHAFTS (SECTION 713.4):	1 HR	
MIXED USE FIRE SEPARATION:	N/A	
FIRE PARTITIONS (SECTION 708)		
EXIT CORRIDOR (SECTION 1020):	0 HR	
TENANT SEPARATIONS:	N/A	
SMOKE BARRIERS (SECTION 709):	N/A	
SMOKE PARTITIONS (SECTION 710):	N/A	
DRAFTSTOPPING (SECTION 718):	N/A	

CHAPTER 8: INTERIOR FINISHES

INTERIOR FINISH REQUIREMENTS (TABLE 803.13) USE GROUP XX
VERTICAL EXITS & PASSAGEWAYS: CLASS B MINIMUM
EXIT ACCESS CORRIDORS: CLASS B MINIMUM
ROOMS / ENCLOSED SPACES: CLASS C MINIMUM

CHAPTER 9: FIRE PROTECTION SYSTEMS

AUTOMATIC SPRINKLER SYSTEM (SECTION 903):
SM - BUILDING IS TWO OR MORE STORIES ABOVE GRADE PLANE EQUIPPED THROUGHOUT WITH AN AUTOMATIC SPRINKLER SYSTEM

PORTABLE FIRE EXTINGUISHERS (SECTION 906.1): PROVIDED PER THIS SECTION

FIRE ALARM AND DETECTION SYSTEM (SECTION 907.2): FIRE ALARM AND DETECTION SYSTEM IS PROVIDED THROUGHOUT BUILDING

CHAPTER 10: MEANS OF EGRESS

DESIGN OCCUPANT LOAD (TABLE 1004.5):
ASSEMBLY - 15 NET SF / OCCUPANT = 179 OCCUPANTS

BUSINESS - 150 GROSS SF / OCCUPANT = 118 OCCUPANTS

TOTAL OCCUPANTS = 297

COMMON PATH OF TRAVEL (SECTION 1006.2.1): WITH SPRINKLER SYSTEM = 100 FT MAX. - USE GROUP B,S
75 FT MAX. - USE GROUP A-3
ACTUAL MAXIMUM COMMON PATH OF EGRESS TRAVEL = 95 FT (B)

REQUIRED NUMBER OF EXITS (TABLE 1006.3.3): EXITS REQUIRED = 2 ; EXITS PROVIDED = 6

AREAS OF REFUGE (SECTION 1009.3.3): EXCEPTION #2 - NOT REQUIRED IN BUILDINGS EQUIPPED THROUGHOUT WITH AN AUTOMATIC SPRINKLER SYSTEM

EXIT ACCESS TRAVEL DISTANCE (TABLE 1017.2): WITH SPRINKLER SYSTEM = 250 FT MAX. - USE GROUP A3
ACTUAL MAXIMUM EXIT ACCESS TRAVEL DISTANCE = 145 FT

CORRIDOR FIRE RESISTANCE RATING (TABLE 1020.2): 0 HR WITH AUTOMATIC SPRINKLER SYSTEM.

REQUIRED CORRIDOR WIDTHS (SECTION 1020.3): 44" MIN.; ACTUAL CORRIDOR WIDTHS = 44" MIN.

CHAPTER 11: ACCESSIBILITY

ACCESSIBLE ROUTE (SECTION 1104.1): AT LEAST ONE ACCESSIBLE ROUTE IS REQUIRED

ACCESSIBLE ENTRANCES (SECTION 1105): 60% OF REQUIRED PUBLIC ENTRANCES MUST BE ACCESSIBLE. ALL ENTRANCES IN NEW ADDITION ARE ACCESSIBLE

AUTOMATIC DOORS (SECTION 1105.1.1) NOT REQUIRED; 2 PROVIDED

PARKING AND PASSENGER LOADING FACILITIES (SECTION 1106): ACCESSIBLE PARKING SPACES ARE PROVIDED IN PARKING LOT - SEE CIVIL DRAWINGS

CHAPTER 29: PLUMBING SYSTEMS:

MINIMUM PLUMBING FACILITIES (VCC SECTION 2902/ VPC SECTION 403): SEE CHART - PLUMBING FIXTURE CALCULATIONS

ORIGINAL SIZE : ARCH E1 (30X42) | 5/5/2026 3:05:59 AM
C:\Users\trookstool.SPECTRUM\OneDrive - Spectrum Design PC\Documents\24112 Arch Sheriff R26 Central_trookstool@spectrumpc.com.rvt

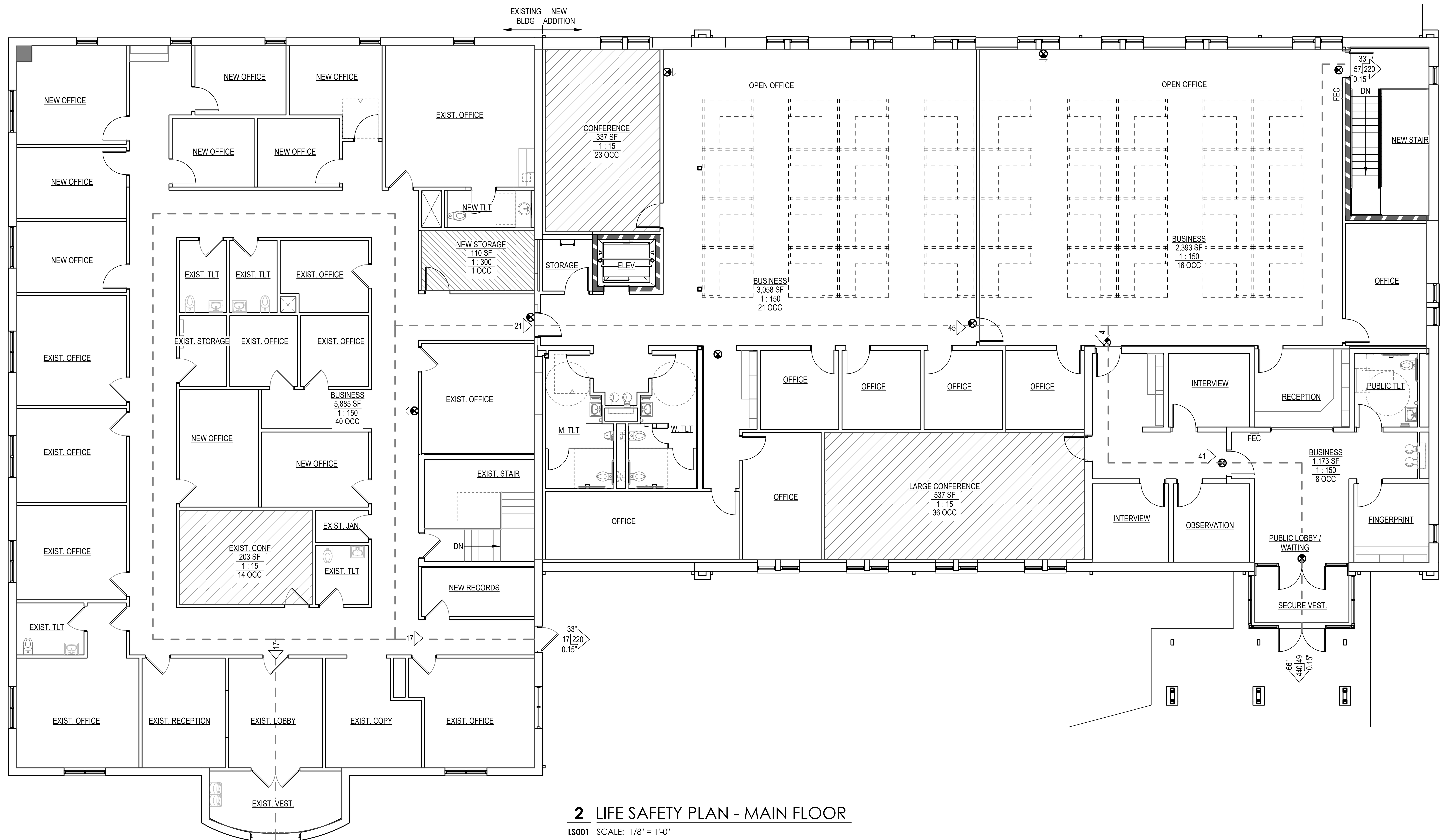

2 LIFE SAFETY PLAN - MAIN FLOOR
LS001 SCALE: 1/8" = 1'-0"

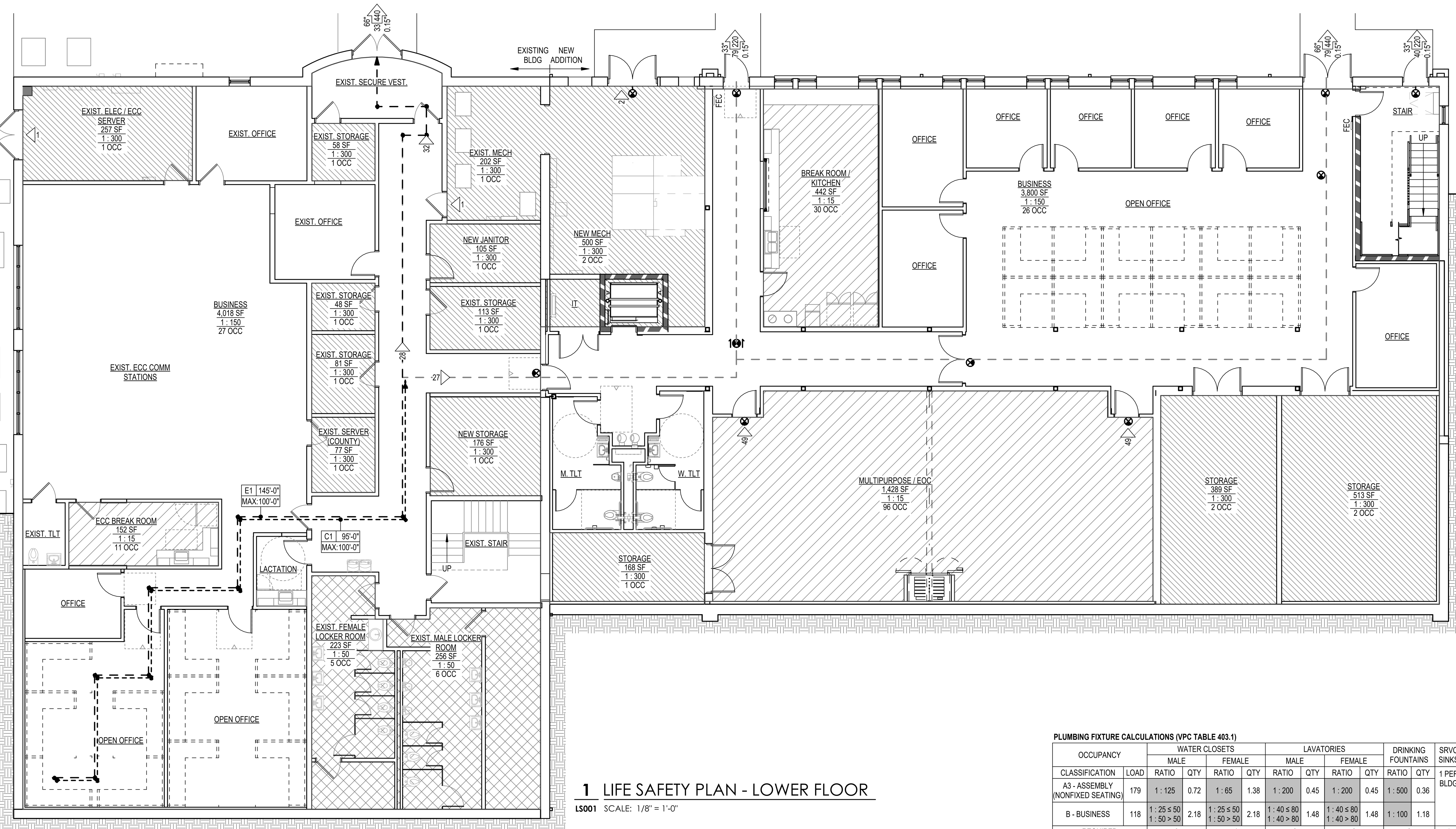

1 LIFE SAFETY PLAN - LOWER FLOOR
LS001 SCALE: 1/8" = 1'-0"

PLUMBING FIXTURE CALCULATIONS (VPC TABLE 403.1)

OCCUPANCY		WATER CLOSETS				LAVATORIES				DRINKING FOUNTAINS		SRVC SINKS
		MALE		FEMALE		MALE		FEMALE				
CLASSIFICATION	LOAD	RATIO	QTY	RATIO	QTY	RATIO	QTY	RATIO	QTY	RATIO	QTY	1 PER BLDG
A3 - ASSEMBLY (NONFIXED SEATING)	179	1 : 125	0.72	1 : 65	1.38	1 : 200	0.45	1 : 200	0.45	1 : 500	0.36	
B - BUSINESS	118	1 : 25 ≤ 50 1 : 50 > 50	2.18	1 : 25 ≤ 50 1 : 50 > 50	2.18	1 : 40 ≤ 80 1 : 40 > 80	1.48	1 : 40 ≤ 80 1 : 40 > 80	1.48	1 : 100	1.18	
REQUIRED		3		4		2		2		2		1
PROVIDED		12		9		9		9		6		2

NOTE: TWO ADDITIONAL TOILET ROOMS ACCESSIBLE ONLY THROUGH PRIVATE OFFICES ARE PROVIDED IN EXCESS OF REQUIRED FIXTURE QUANTITY

LIFE SAFETY LEGEND

SPACE IDENTIFIER

SPACE NAME / 1200 SF / 1 : 200 / 200 | 200
- AREA OF SPACE
- SF PER OCCUPANT
- ACTUAL SEATS (IF APPLICABLE)
- CALCULATED OCCUPANCY

EGRESS ELEMENTS

66" / 440 | 200 / 0.15"
- ALLOWABLE EGRESS CAPACITY OF OPENING
- CLEAR WIDTH OF OPENING
- ACTUAL EGRESS LOAD OF OPENING
- EGRESS CAPACITY FACTOR

100 — CUMULATIVE EGRESS LOAD ALONG PATH

STAIR / 100" CLR / 1 : 0.3" / 1,000 CAP.
- CLEAR WIDTH OF STAIRWAY
- EGRESS CAPACITY FACTOR
- OCCUPANT CAPACITY OF STAIRWAY

TRAVEL DISTANCE

- PATHS OF TRAVEL
- Cx 100'-0" MAX:200'-0" — COMMON PATH OF TRAVEL (Cx) DISTANCE AND DIRECTION
- Ex 100'-0" MAX:200'-0" — EXIT ACCESS TRAVEL (Ex) DISTANCE AND DIRECTION
- Dx 100'-0" MAX:200'-0" — DEAD END CORRIDOR (Dx) DISTANCE AND DIRECTION

RATED ASSEMBLIES

1 HOUR FIRE RATING

FIRE EXTINGUISHER & MOUNTING TYPE

FEC FIRE EXTINGUISHER & SEMI-RECESSED CABINET

OTHER LIFE SAFETY DEVICES

AED AUTOMATED EXTERNAL DEFIBRILLATOR

OCCUPANCY LEGEND

- *ACCESSORY STORAGE AREAS / MECH. EQUIPT. ROOMS*
- *ASSEMBLY - UNCONCENTRATED (TABLE AND CHAIRS)*
- *BUSINESS AREAS*
- *LOCKER ROOMS*

XX **SHEET KEYNOTES**

0 4' 8' 16'
SCALE: 1/8" = 1' - 0"

SPECTRUM DESIGN
architects | engineers

Plaza Suite 1
10 Church Avenue, SE
Roanoke, VA 24011

540.342.6001
spectrumpc.com

BEDFORD COUNTY SHERIFF'S OFFICE EXPANSION

SPECTRUM DESIGN PROJECT NO.: **24112**

COMMONWEALTH OF VIRGINIA
TRAVIS ROOKSTOOL
Lic. No. 17288
05.04.2026
ARCHITECT

PROJ. MGR.:	CHECKED BY:	DRAWN BY:
JM	GEG	TLR, MIG

SHEET ISSUE DATE:
05.04.2026

PROJECT PHASE:
BID DOCUMENTS

SHEET REVISIONS:

PLAN NORTH | SITE NORTH

SHEET NAME:
BUILDING CODE SUMMARY & LIFE SAFETY PLANS

SHEET NUMBER:
LS001

ENGINEERS NOTES

SPECTRUM DESIGN, PC ASSUMES NO RESPONSIBILITY FOR INFORMATION ON OR ADEQUACY OF THE PLANS UNTIL THEY HAVE BEEN APPROVED BY REQUIRED PUBLIC AUTHORITIES.

COMMENCEMENT OF ANY WORK ON THE PROJECT IS AT THE SOLE RISK OF THE OWNER/DEVELOPER.

GENERAL NOTES

STANDARDS: ALL MATERIALS AND METHODS SHALL COMPLY WITH THE APPLICABLE STANDARDS OF THE AMERICAN SOCIETY OF TESTING AND MATERIALS (ASTM), AMERICAN NATIONAL STANDARDS INSTITUTE (ANSI), VIRGINIA DEPARTMENT OF TRANSPORTATION (VDOT), VIRGINIA STORMWATER MANAGEMENT HANDBOOK (VSMH), COMMONWEALTH OF VIRGINIA DEPARTMENT OF HEALTH (VDH) AND/OR THE COUNTY OF BEDFORD, LATEST EDITIONS. RECOMMENDATIONS OF APPLICABLE MATERIALS MANUFACTURERS SHALL ALSO BE FOLLOWED AS PART OF THIS CONTRACT.

DEBRIS: CONSTRUCTION DEBRIS SHALL BE CONTAINERIZED IN ACCORDANCE WITH THE VIRGINIA LITTER CONTROL ACT. NO LESS THAN ONE LITTER RECEPTACLE SHALL BE PROVIDED ON SITE. ALL DAMAGED MATERIAL OR SURPLUS EXCAVATED MATERIAL NOT SUITABLE FOR USE AS FILL, BACKFILL OR TOPSOIL SHALL BECOME THE PROPERTY OF THE CONTRACTOR TO DISPOSE OF OFFSITE AS HE WISHES, WITHOUT INJURY TO THE OWNER OR ANY INDIVIDUAL.

ALL WORK WITHIN PUBLIC R/W SHALL ADHERE TO THE BEDFORD COUNTY EXCAVATION AND RESTORATION STANDARDS.

OBTAIN AND PAY FOR ALL REQUIRED PERMITS AND FEES TO PERFORM WORK WITHIN ALLEY AND PUBLIC RIGHT-OF-WAY.

OBTAIN AND PAY FOR ALL UTILITY AND STREET OPENING PERMITS REQUIRED BY THE COUNTY FOR UTILITY.

UTILITIES SHOWN WERE OBTAINED FROM BEST AVAILABLE SOURCES. CONTRACTOR SHALL ASSUME MINOR DISCREPANCIES AND ASSUME COSTS ASSOCIATED TO CONNECT OR PROVIDE MINOR ADJUSTMENTS.

ALL NEW AND/OR RELOCATED UTILITIES, INCLUDING UTILITY LATERALS AND SERVICE LINES, AND ELECTRICAL FEEDS SHALL BE UNDERGROUND. CONTRACTOR SHALL PROVIDE 2 WEEKS NOTICE TO COUNTY PROJECT MANAGER PRIOR TO ANY UTILITY DISRUPTION.

CONTRACTOR SHALL UTILIZE A/E CAD BASE DRAWING FOR STAKEOUT BY A VIRGINIA LICENSED SURVEYOR IN THE COMMONWEALTH OF VIRGINIA.

CONTRACTOR SHALL COORDINATE WITH OWNER FOR PROJECT PHASING.

DEMOLITION NOTES

1. THE FOLLOWING GENERAL NOTES APPLY FOR DEMOLITION SHEET C101. REFER TO PROPOSED CONDITION SHEETS FOR MORE INFORMATION.
2. WHERE INDICATED OR WHERE IN CONFLICT WITH NEW CONSTRUCTION, EXISTING TOPOGRAPHICAL AND PLANIMETRIC FEATURES (BUILDING STRUCTURE AND FOUNDATION, SIGN AND FOUNDATION, ASPHALT PAVEMENT, CURB, UTILITY POLES, OVERHEAD UTILITIES, UNDERGROUND INFRASTRUCTURE, ROCKS, AND LANDSCAPING FEATURES) WITHIN LIMITS OF CLEARING AND GRADING (LIMITS OF DISTURBANCE) ARE TO BE REMOVED.
   2.1. EXCAVATION REQUIREMENTS: EXISTING ASPHALT GRADES ARE INTENDED TO BE USED AS THE TEMPORARY SURFACE INSOFAR AS OBSTRUCTIONS ARE REMOVED AND PROPOSED GRADES AS SHOWN HAVE BEEN ADJUSTED.
3. THE LOCATION OF EXISTING UTILITIES, INCLUDING UNDERGROUND UTILITIES, IS INDICATED ON THE DRAWINGS INSOFAR AS THEIR EXISTENCE AND LOCATION WERE KNOWN AT THE TIME OF THE PREPARATION OF THE DRAWINGS. HOWEVER, NOTHING IN THESE CONTRACT DOCUMENTS SHALL BE CONSTRUED AS A GUARANTEE THAT SUCH UTILITIES ARE IN THE LOCATION INDICATED OR THAT THEY ACTUALLY EXIST, OR THAT OTHER UTILITIES ARE NOT WITHIN THE AREA OF OPERATIONS. THE CONTRACTOR SHALL MAKE ALL NECESSARY INVESTIGATIONS TO DETERMINE THE EXISTENCE, LOCATIONS, AND DIMENSIONS OF SUCH UTILITIES. THE CONTRACTOR SHALL PAY FOR ANY DAMAGE TO AND FOR ANY MAINTENANCE AND PROTECTION OF EXISTING UTILITIES AND STRUCTURES.
4. ALL EXISTING UTILITIES TO REMAIN IN PLACE UNLESS OTHERWISE NOTED. COORDINATE WITH UTILITY SERVICE COMPANY PRIOR TO PERFORMING DEMOLITION WORK.
5. ALL DEMOLISHED UTILITIES SHALL BE REMOVED AND TRENCHES BACKFILLED PER SPECIFICATIONS.
6. THE CONTRACTOR SHALL CONTACT "VIRGINIA 811" (1-800-552-7001 OR 811) 48 HOURS PRIOR TO WORKING IN THE VICINITY OF THE EXISTING UTILITIES.
7. FLOODNOTE: CAPTION PROPERTY DOES NOT LIE WITHIN THE LIMITS OF A FLOOD BOUNDARY AND IS DESIGNATED BY FEMA BOUNDARY "X" (UNSHADED) AS DETERMINED BY HURT & PROFFITT, INC., SURVEYOR.
8. CONTRACTOR IS RESPONSIBLE FOR PROPER DISPOSAL OF ALL DEMO MATERIALS.
9. OWNER TO COORDINATE REMOVAL OF CONTENTS OF ANY STRUCTURE TO BE DEMOLISHED OR RELOCATED PRIOR TO WORK. CONTRACTOR TO PROVIDE MINIMUM 2 WEEKS' NOTICE TO OWNER PRIOR TO DEMOLITION.
10. TREE DEMOLITION SHALL INCLUDE COMPLETE STUMP AND ROOT SYSTEM DEMOLITION, AS WELL AS ANY GRADING, BACKFILL, AND SEEDING NECESSARY.
11. CONTRACTOR SHALL BE RESPONSIBLE FOR ALL TRAFFIC CONTROL MEASURES NECESSARY TO DIRECT VEHICLE AND PEDESTRIAN TRAFFIC SAFELY AND EFFICIENTLY AROUND THE CONSTRUCTION AREA. CONTRACTOR IS RESPONSIBLE FOR PROVIDING ANY ROAD/LANE CLOSURES OR SAFETY PLANS REQUIRED.

PARKING CALCULATIONS

EXISTING PARKING: 55 SPACES
EXISTING H/C PARKING: 3 SPACES (3 REQUIRED)
EXISTING ON-SITE LOADING SPACES: 0 SPACES

TOTAL PARKING PROPOSED: 73 SPACES
TOTAL H/C PARKING PROPOSED: 4 SPACES (3 REQUIRED)
TOTAL ON-SITE LOADING SPACES PROPOSED: 0 SPACES

PARKING AREA LANDSCAPING CALCULATIONS

NEW PARKING SPACES: 37
LANDSCAPING REQUIREMENT (18 SF PER SPACE): 666 SF
LANDSCAPING AREA PROVIDED: 795 SF

LEGEND

- BENCHMARK
- GUY WIRE
- TREE
- SHRUB
- MB MAILBOX
- DS DOWNSPOUT
- SANITARY STRUCTURE
- CO CLEANOUT
- D STORM SEWER MANHOLE
- UTILITY POLE
- LIGHT POLE
- XFMR ELECTRICAL TRANSFORMER
- XX.XX SPOT ELEVATION
- E ELECTRICAL BOX
- EH ELECTRICAL HANDHOLE
- EM ELECTRICAL METER
- EV ELECTRICAL VAULT
- W WATER MANHOLE
- WM WATER METER
- WV WATER VAULT
- FIRE HYDRANT
- VALVE
- SPIGOT
- T TELE/COMM BOX
- TH TELE/COMM HANDHOLE
- T TELE/COMM MANHOLE
- TV TELE/COMM VAULT
- TP TELE/COMM PEDESTAL
- GM GAS METER
- POST/BOLLARD
- SIGN
- FLAGPOLE
- HP HEAT PUMP

ABBREVIATIONS:
FF = FINISH FLOOR
CONC. = CONCRETE
C&G = CURB & GUTTER
GEN = GENERATOR
SDMH = STORM DRAIN MANHOLE
SSMH = SANITARY SEWER MANHOLE
INV. = INVERT
RCP = REINFORCED CONCRETE PIPE
CMP = CORRUGATED METAL PIPE
PVC = POLYVINYL CHLORIDE PIPE
COBED = COUNTY OF BEDFORD ELECTRIC
RTE. = ROUTE
HWY = HIGHWAY
DR = DRIVE
IRF = IRON ROD FOUND
SQ.FT. = SQUARE FEET
R/W = RIGHT OF WAY
EOI = END OF INFORMATION
FDC = FIRE DEPARTMENT CONNECTION
HCR = HANDICAP RAMP
ELEV = ELEVATION
FES = FLARED END SECTION
TNS = TRAVERSE NAIL SET

EXISTING STORM SEWER TABLE:

D1 TOP: 967.26' INVO: 964.23'	D8 TOP: 957.28' INVIN: 953.83' INVO: 953.81'	D15 TOP: 961.25' INVO: 958.12'
D2 TOP: 968.82' INVIN: 964.18' INVO: 964.07'	D9 TOP: 958.29' INVIN: 953.65' INVO: 953.46'	D16 TOP: 967.27' INVO: 964.26'
D3 TOP: 968.91' INVIN E: 963.47' INVIN NW: 964.31' INVO: 963.40'	D10 TOP: 958.29' INVIN: 952.91' INVO: 952.80'	D17 TOP: 964.19' INVIN: 961.39' INVO: 961.37'
D4 TOP: 970.37' INVO: 965.90'	D11 TOP: 959.04 INVIN: 952.28' INVO: 952.17'	
D5 TOP: 968.65' INVIN: 961.23' INVO: 961.01'	D12 TOP: 958.86' INVIN 12": 951.90' INVIN 18": 951.45' INVO: 951.40'	
D6 TOP: 957.24' INVIN 10": 952.43' INVIN 15": 954.36' INVO: 952.43'	D13 TOP: 957.20' INVO: 952.74'	
D17 TOP: 957.22' INVO: 954.42'	D14 TOP: 959.96' INVIN 12": 957.61' INVIN 24": 950.49' INVO: 950.32'	

SPECTRUM DESIGN
architects | engineers

Plaza Suite 1
10 Church Avenue, SE
Roanoke, VA 24011

540.342.6001
spectrumpc.com

BEDFORD COUNTY SHERIFF'S OFFICE EXPANSION

SPECTRUM DESIGN PROJECT NO.: **24112**

COMMONWEALTH OF VIRGINIA
MICHAEL A. RAKES
Lic. No. 28199
05.04.2026
PROFESSIONAL ENGINEER

PROJ. MGR.: **JM** CHECKED BY: **MAR** DRAWN BY: **GAG**

SHEET ISSUE DATE:
05.04.2026

PROJECT PHASE:
BID DOCUMENTS

SHEET REVISIONS:

KEY PLAN:

SHEET NAME:

GENERAL NOTES & LEGEND

SHEET NUMBER:

C001

J:\24112\2.2 CAD\dwg\Sheriff\24112 Sheriff Base.dwg, Plotted By: ggasso, Plotted: Mon 04, 2026 - 8:23am

SURVEY NOTES:

1. THIS TOPOGRAPHIC SURVEY WAS COMPLETED UNDER THE DIRECT AND RESPONSIBLE CHARGE OF, CHRIS KAKNIS OF HURT & PROFFITT, INC. FROM AN ACTUAL GROUND/ DRONE LIDAR SURVEY MADE UNDER MY SUPERVISION; THAT THE IMAGERY AND/OR ORIGINAL DATA WAS OBTAINED IN JUNE/JULY 2025; AND THAT THIS PLAT, MAP, OR DIGITAL GEOSPATIAL DATA INCLUDING METADATA MEETS MINIMUM ACCURACY STANDARDS UNLESS OTHERWISE NOTED.
2. THIS TOPOGRAPHIC SURVEY IS ON HORIZONTAL DATUM: NAD83; VERTICAL DATUM: NAVD88.
3. BOUNDARY INFORMATION SHOWN HEREON WAS COMPILED FROM DEEDS AND PLATS OF RECORD AND FIELD INFORMATION. THIS DOES NOT REPRESENT A BOUNDARY SURVEY.
4. UNDERGROUND UTILITIES SHOWN HEREON ARE COMPILED FROM ABOVE GROUND UTILITY EVIDENCE, VIRGINIA 811 DESIGNATIONS ONLY PER TICKETS #B515400639–00B, B515400727–00B, B515400746–00B, B516000664–00A AND SAVE UTILITY LINES PRIVATE LOCATIONS. HOWEVER, LACKING EXCAVATION, THE EXACT LOCATION OF UNDERGROUND FEATURES CANNOT BE ACCURATELY, COMPLETELY, AND RELIABLY DEPICTED. IN ADDITION, IN SOME JURISDICTIONS, 811 OR OTHER SIMILAR UTILITY LOCATE REQUESTS FROM SURVEYORS MAY BE IGNORED OR RESULT IN AN INCOMPLETE RESPONSE. CONTRACTOR IS RESPONSIBLE FOR UTILITY LOCATION IN THE FIELD AND MUST CONTACT VIRGINIA 811 BEFORE CONSTRUCTION.
5. THIS PROPERTY DOES NOT LIE WITHIN A H.U.D. 100 YEAR FLOOD HAZARD ZONE AS SHOWN ON FLOOD INSURANCE MAP NUMBERS 51019C0309D AND 51019C0320D, BEARING AN EFFECTIVE DATE OF SEPTEMBER 29, 2010.
6. FINISH FLOOR ELEVATIONS SHOWN HEREON ARE TAKEN ON LOWEST FLOOR OF DWELLING, UNLESS NOTED HEREON.
7. CONTOUR INTERVAL = 5'
8. THIS TOPOGRAPHIC SURVEY WAS COMPLETED FOR SPECTRUM DESIGN.

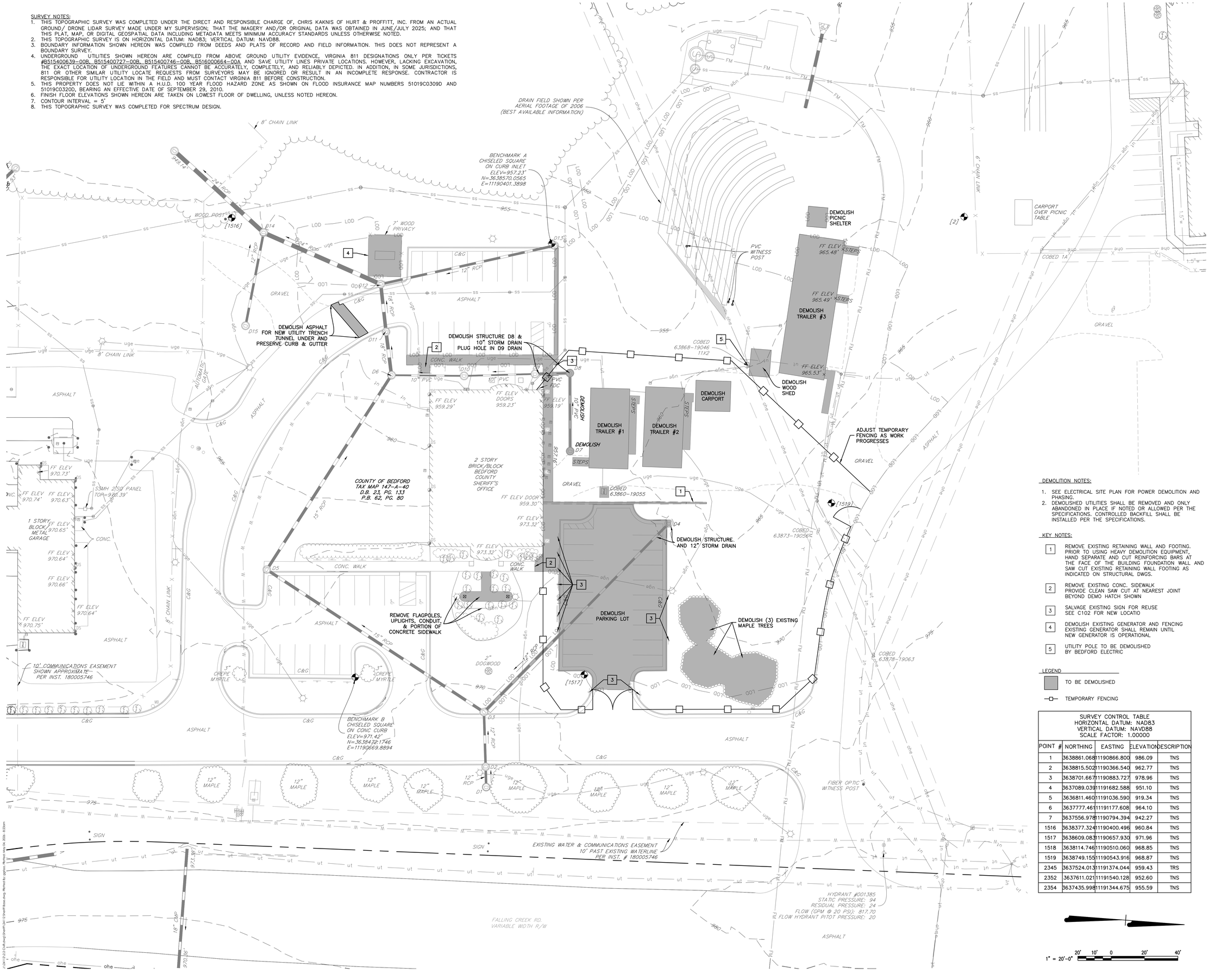

SPECTRUM DESIGN
architects | engineers

Plaza Suite 1
10 Church Avenue, SE
Roanoke, VA 24011

540.342.6001
spectrumpc.com

BEDFORD COUNTY SHERIFF'S OFFICE EXPANSION

SPECTRUM DESIGN PROJECT NO.: **24112**

COMMONWEALTH OF VIRGINIA
MICHAEL A. RAKES
Lic. No. 28199
05.04.2026
PROFESSIONAL ENGINEER

DEMOLITION NOTES:

1. SEE ELECTRICAL SITE PLAN FOR POWER DEMOLITION AND PHASING.
2. DEMOLISHED UTILITIES SHALL BE REMOVED AND ONLY ABANDONED IN PLACE IF NOTED OR ALLOWED PER THE SPECIFICATIONS. CONTROLLED BACKFILL SHALL BE INSTALLED PER THE SPECIFICATIONS.

KEY NOTES:

1. REMOVE EXISTING RETAINING WALL AND FOOTING. PRIOR TO USING HEAVY DEMOLITION EQUIPMENT, HAND SEPARATE AND CUT REINFORCING BARS AT THE FACE OF THE BUILDING FOUNDATION WALL AND SAW CUT EXISTING RETAINING WALL FOOTING AS INDICATED ON STRUCTURAL DWGS.
2. REMOVE EXISTING CONC. SIDEWALK PROVIDE CLEAN SAW CUT AT NEAREST JOINT BEYOND DEMO HATCH SHOWN
3. SALVAGE EXISTING SIGN FOR REUSE SEE C102 FOR NEW LOCATIO
4. DEMOLISH EXISTING GENERATOR AND FENCING EXISTING GENERATOR SHALL REMAIN UNTIL NEW GENERATOR IS OPERATIONAL
5. UTILITY POLE TO BE DEMOLISHED BY BEDFORD ELECTRIC

LEGEND

TO BE DEMOLISHED

TEMPORARY FENCING

SURVEY CONTROL TABLE
HORIZONTAL DATUM: NAD83
VERTICAL DATUM: NAVD88
SCALE FACTOR: 1.00000

POINT #	NORTHING	EASTING	ELEVATION	DESCRIPTION
1	3638861.068	11190866.800	986.09	TNS
2	3638815.502	11190366.540	962.77	TNS
3	3638701.667	11190883.727	978.96	TNS
4	3637089.039	11191682.588	951.10	TNS
5	3636811.460	11191036.590	919.34	TNS
6	3637777.461	11191177.608	964.10	TNS
7	3637556.978	11190794.394	942.27	TNS
1516	3638377.324	11190400.496	960.84	TNS
1517	3638609.083	11190657.930	971.96	TNS
1518	3638114.746	11190510.060	968.85	TNS
1519	3638749.155	11190543.916	968.87	TNS
2345	3637524.013	11191374.044	959.43	TRS
2352	3637611.021	11191540.128	952.60	TNS
2354	3637435.998	11191344.675	955.59	TNS

PROJ. MGR.: **JM**
CHECKED BY: **MAR**
DRAWN BY: **GAG**

SHEET ISSUE DATE:
05.04.2026

PROJECT PHASE:
BID DOCUMENTS

SHEET REVISIONS:

KEY PLAN:

SHEET NAME:

EXISTING CONDITIONS & DEMOLITION PLAN

SHEET NUMBER:

C101

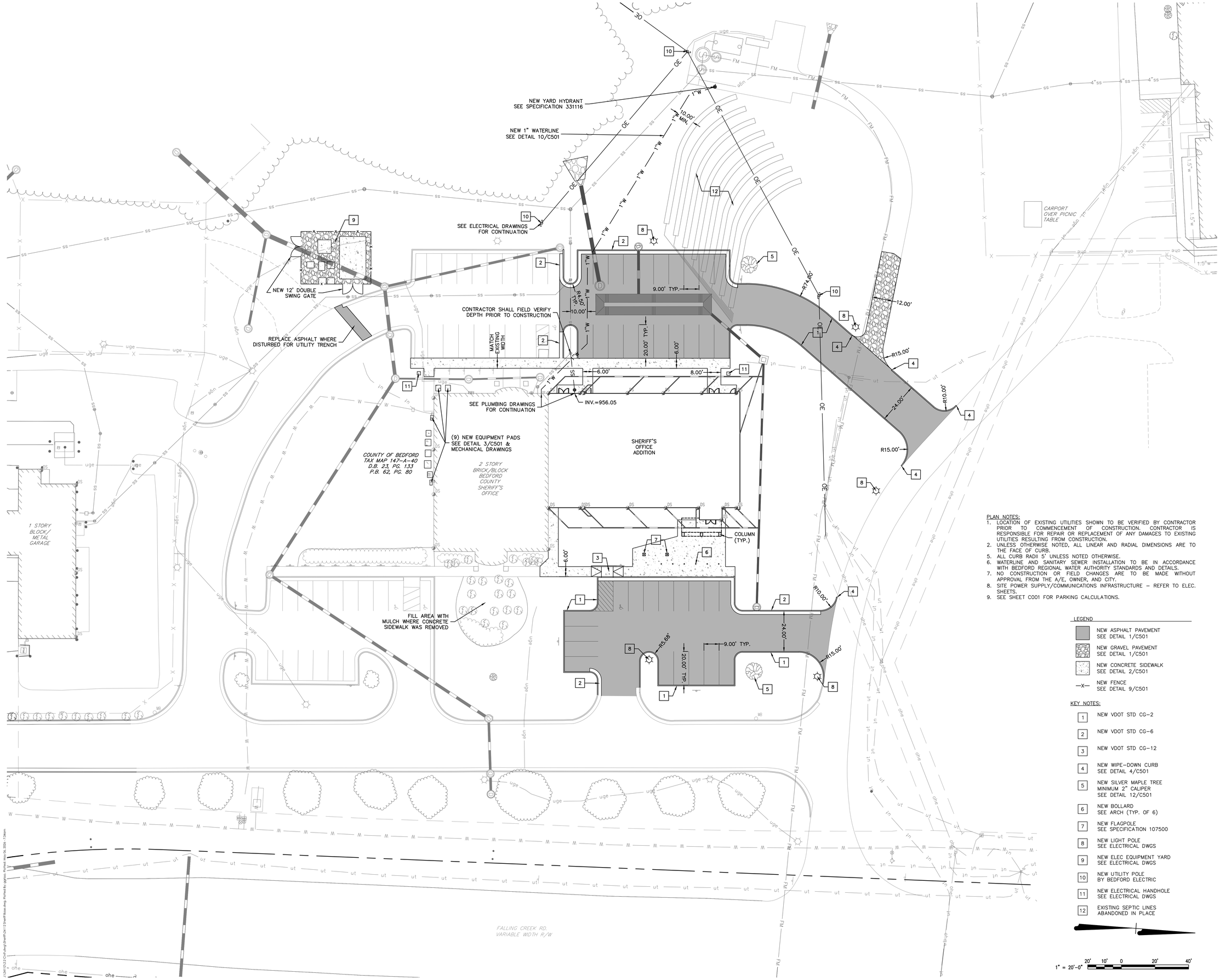

PLAN NOTES:

1. LOCATION OF EXISTING UTILITIES SHOWN TO BE VERIFIED BY CONTRACTOR PRIOR TO COMMENCEMENT OF CONSTRUCTION. CONTRACTOR IS RESPONSIBLE FOR REPAIR OR REPLACEMENT OF ANY DAMAGES TO EXISTING UTILITIES RESULTING FROM CONSTRUCTION.
2. UNLESS OTHERWISE NOTED, ALL LINEAR AND RADIAL DIMENSIONS ARE TO THE FACE OF CURB.
5. ALL CURB RADII 5' UNLESS NOTED OTHERWISE.
6. WATERLINE AND SANITARY SEWER INSTALLATION TO BE IN ACCORDANCE WITH BEDFORD REGIONAL WATER AUTHORITY STANDARDS AND DETAILS.
7. NO CONSTRUCTION OR FIELD CHANGES ARE TO BE MADE WITHOUT APPROVAL FROM THE A/E, OWNER, AND CITY.
8. SITE POWER SUPPLY/COMMUNICATIONS INFRASTRUCTURE – REFER TO ELEC. SHEETS.
9. SEE SHEET C001 FOR PARKING CALCULATIONS.

LEGEND

- NEW ASPHALT PAVEMENT SEE DETAIL 1/C501
- NEW GRAVEL PAVEMENT SEE DETAIL 1/C501
- NEW CONCRETE SIDEWALK SEE DETAIL 2/C501
- —X— NEW FENCE SEE DETAIL 9/C501

KEY NOTES:

1. NEW VDOT STD CG-2
2. NEW VDOT STD CG-6
3. NEW VDOT STD CG-12
4. NEW WIPE-DOWN CURB SEE DETAIL 4/C501
5. NEW SILVER MAPLE TREE MINIMUM 2" CALIPER SEE DETAIL 12/C501
6. NEW BOLLARD SEE ARCH (TYP. OF 6)
7. NEW FLAGPOLE SEE SPECIFICATION 107500
8. NEW LIGHT POLE SEE ELECTRICAL DWGS
9. NEW ELEC EQUIPMENT YARD SEE ELECTRICAL DWGS
10. NEW UTILITY POLE BY BEDFORD ELECTRIC
11. NEW ELECTRICAL HANDHOLE SEE ELECTRICAL DWGS
12. EXISTING SEPTIC LINES ABANDONED IN PLACE

1" = 20'-0" 20' 10' 0 20' 40'

SPECTRUM DESIGN
architects | engineers

Plaza Suite 1
10 Church Avenue, SE
Roanoke, VA 24011

540.342.6001
spectrumpc.com

BEDFORD COUNTY SHERIFF'S OFFICE EXPANSION

SPECTRUM DESIGN PROJECT NO.: **24112**

COMMONWEALTH OF VIRGINIA
MICHAEL A. RAKES
Lic. No. 28199
05.04.2026
PROFESSIONAL ENGINEER

PROJ. MGR.:	CHECKED BY:	DRAWN BY:
JM	MAR	GAG

SHEET ISSUE DATE:
05.04.2026

PROJECT PHASE:
BID DOCUMENTS

SHEET REVISIONS:

KEY PLAN:

SHEET NAME:

DIMENSIONAL LAYOUT & UTILITY PLAN

SHEET NUMBER:

C102

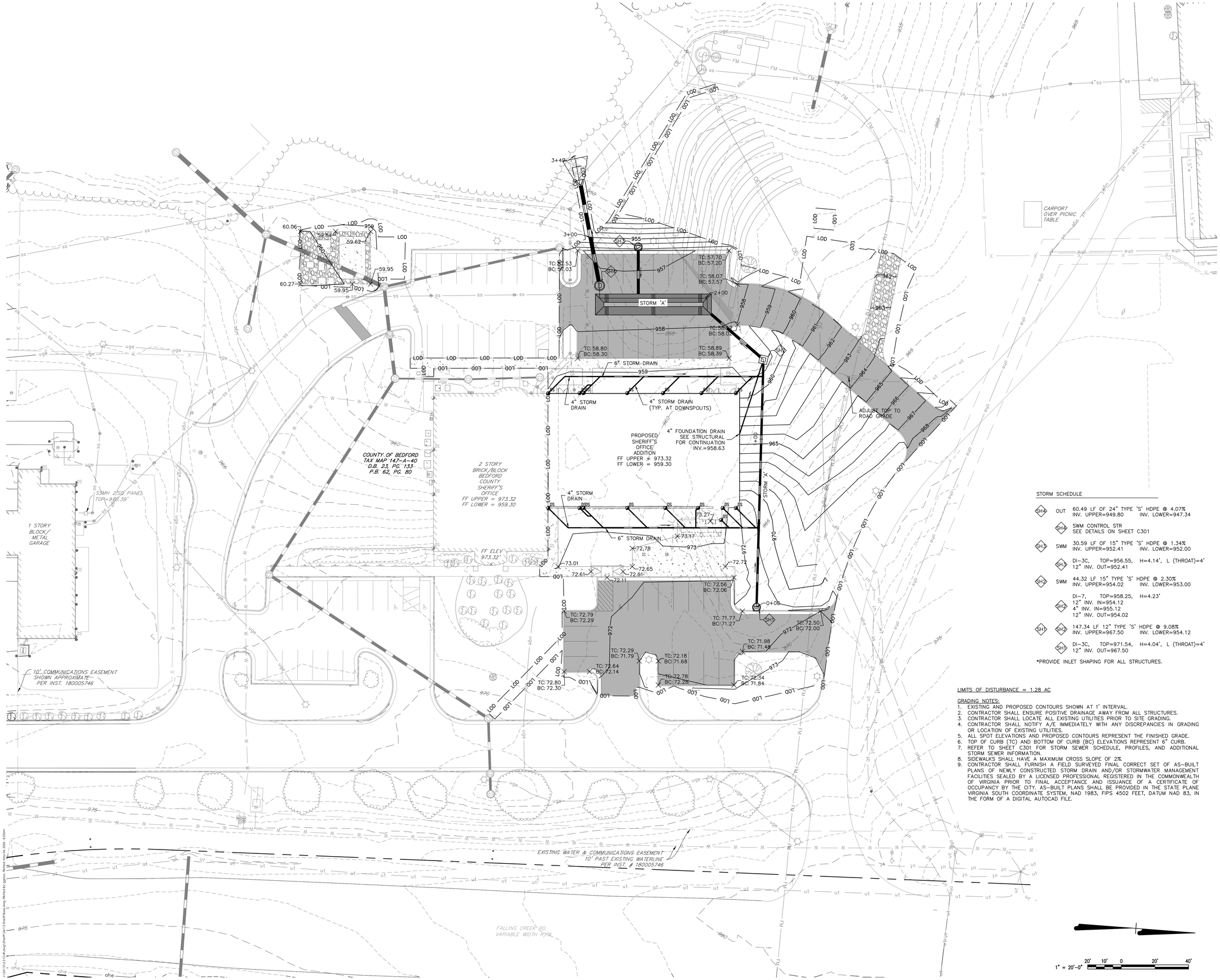

SPECTRUM DESIGN
architects | engineers

Plaza Suite 1
10 Church Avenue, SE
Roanoke, VA 24011
540.342.6001
spectrumpc.com

BEDFORD COUNTY SHERIFF'S OFFICE EXPANSION

SPECTRUM DESIGN PROJECT NO.: **24112**

COMMONWEALTH OF VIRGINIA
MICHAEL A. RAKES
Lic. No. 28199
05.04.2026
PROFESSIONAL ENGINEER

PROJ. MGR.:	CHECKED BY:	DRAWN BY:
JM	MAR	GAG

SHEET ISSUE DATE:
05.04.2026

PROJECT PHASE:
BID DOCUMENTS

SHEET REVISIONS:

KEY PLAN:

SHEET NAME:

GRADING & DRAINAGE PLAN

SHEET NUMBER:

C103

STORM SCHEDULE

SH4	OUT	60.49 LF OF 24" TYPE 'S' HDPE @ 4.07% INV. UPPER=949.80 INV. LOWER=947.34
SH4		SWM CONTROL STR SEE DETAILS ON SHEET C301
SH3	SWM	30.59 LF OF 15" TYPE 'S' HDPE @ 1.34% INV. UPPER=952.41 INV. LOWER=952.00
SH3		DI-3C, TOP=956.55, H=4.14', L (THROAT)=4' 12" INV. OUT=952.41
SH2	SWM	44.32 LF 15" TYPE 'S' HDPE @ 2.30% INV. UPPER=954.02 INV. LOWER=953.00
SH2		DI-7, TOP=958.25, H=4.23' 12" INV. IN=954.12 4" INV. IN=955.12 12" INV. OUT=954.02
SH1	SH2	147.34 LF 12" TYPE 'S' HDPE @ 9.08% INV. UPPER=967.50 INV. LOWER=954.12
	SH1	DI-3C, TOP=971.54, H=4.04', L (THROAT)=4' 12" INV. OUT=967.50

*PROVIDE INLET SHAPING FOR ALL STRUCTURES.

LIMITS OF DISTURBANCE = 1.28 AC

GRADING NOTES:

1. EXISTING AND PROPOSED CONTOURS SHOWN AT 1' INTERVAL.
2. CONTRACTOR SHALL ENSURE POSITIVE DRAINAGE AWAY FROM ALL STRUCTURES.
3. CONTRACTOR SHALL LOCATE ALL EXISTING UTILITIES PRIOR TO SITE GRADING.
4. CONTRACTOR SHALL NOTIFY A/E IMMEDIATELY WITH ANY DISCREPANCIES IN GRADING OR LOCATION OF EXISTING UTILITIES.
5. ALL SPOT ELEVATIONS AND PROPOSED CONTOURS REPRESENT THE FINISHED GRADE.
6. TOP OF CURB (TC) AND BOTTOM OF CURB (BC) ELEVATIONS REPRESENT 6" CURB.
7. REFER TO SHEET C301 FOR STORM SEWER SCHEDULE, PROFILES, AND ADDITIONAL STORM SEWER INFORMATION.
8. SIDEWALKS SHALL HAVE A MAXIMUM CROSS SLOPE OF 2%.
9. CONTRACTOR SHALL FURNISH A FIELD SURVEYED FINAL CORRECT SET OF AS-BUILT PLANS OF NEWLY CONSTRUCTED STORM DRAIN AND/OR STORMWATER MANAGEMENT FACILITIES SEALED BY A LICENSED PROFESSIONAL REGISTERED IN THE COMMONWEALTH OF VIRGINIA PRIOR TO FINAL ACCEPTANCE AND ISSUANCE OF A CERTIFICATE OF OCCUPANCY BY THE CITY. AS-BUILT PLANS SHALL BE PROVIDED IN THE STATE PLANE VIRGINIA SOUTH COORDINATE SYSTEM, NAD 1983, FIPS 4502 FEET, DATUM NAD 83, IN THE FORM OF A DIGITAL AUTOCAD FILE.

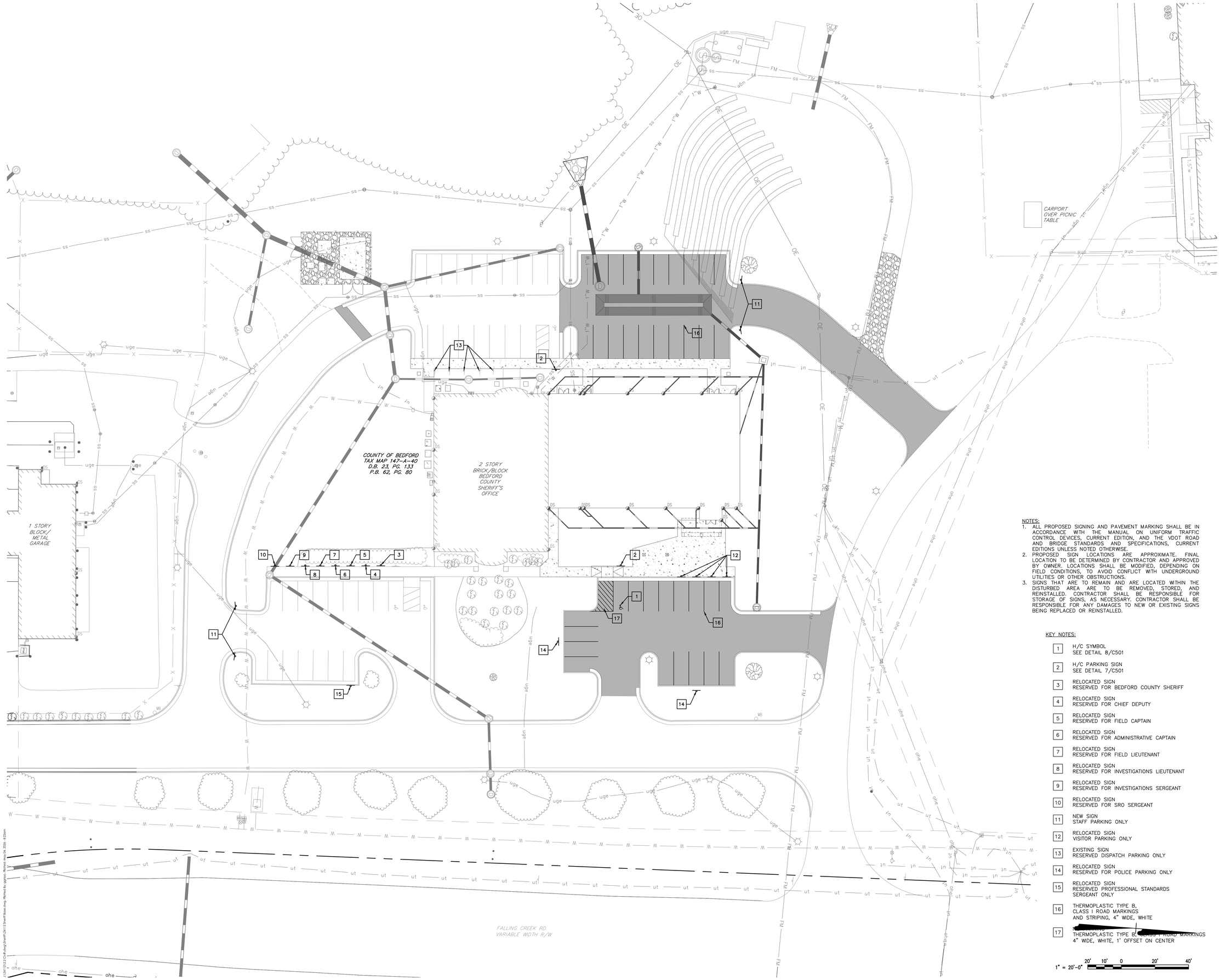

NOTES:

1. ALL PROPOSED SIGNING AND PAVEMENT MARKING SHALL BE IN ACCORDANCE WITH THE MANUAL ON UNIFORM TRAFFIC CONTROL DEVICES, CURRENT EDITION, AND THE VDOT ROAD AND BRIDGE STANDARDS AND SPECIFICATIONS, CURRENT EDITIONS UNLESS NOTED OTHERWISE.
2. PROPOSED SIGN LOCATIONS ARE APPROXIMATE. FINAL LOCATION TO BE DETERMINED BY CONTRACTOR AND APPROVED BY OWNER. LOCATIONS SHALL BE MODIFIED, DEPENDING ON FIELD CONDITIONS, TO AVOID CONFLICT WITH UNDERGROUND UTILITIES OR OTHER OBSTRUCTIONS.
3. SIGNS THAT ARE TO REMAIN AND ARE LOCATED WITHIN THE DISTURBED AREA ARE TO BE REMOVED, STORED, AND REINSTALLED. CONTRACTOR SHALL BE RESPONSIBLE FOR STORAGE OF SIGNS, AS NECESSARY. CONTRACTOR SHALL BE RESPONSIBLE FOR ANY DAMAGES TO NEW OR EXISTING SIGNS BEING REPLACED OR REINSTALLED.

KEY NOTES:

1	H/C SYMBOL SEE DETAIL 8/C501
2	H/C PARKING SIGN SEE DETAIL 7/C501
3	RELOCATED SIGN RESERVED FOR BEDFORD COUNTY SHERIFF
4	RELOCATED SIGN RESERVED FOR CHIEF DEPUTY
5	RELOCATED SIGN RESERVED FOR FIELD CAPTAIN
6	RELOCATED SIGN RESERVED FOR ADMINISTRATIVE CAPTAIN
7	RELOCATED SIGN RESERVED FOR FIELD LIEUTENANT
8	RELOCATED SIGN RESERVED FOR INVESTIGATIONS LIEUTENANT
9	RELOCATED SIGN RESERVED FOR INVESTIGATIONS SERGEANT
10	RELOCATED SIGN RESERVED FOR SRO SERGEANT
11	NEW SIGN STAFF PARKING ONLY
12	RELOCATED SIGN VISITOR PARKING ONLY
13	EXISTING SIGN RESERVED DISPATCH PARKING ONLY
14	RELOCATED SIGN RESERVED FOR POLICE PARKING ONLY
15	RELOCATED SIGN RESERVED PROFESSIONAL STANDARDS SERGEANT ONLY
16	THERMOPLASTIC TYPE B, CLASS I ROAD MARKINGS AND STRIPING, 4" WIDE, WHITE
17	[redacted] THERMOPLASTIC TYPE B, CLASS I ROAD MARKINGS 4" WIDE, WHITE, 1' OFFSET ON CENTER

1" = 20'-0" 20' 10' 0 20' 40'

SPECTRUM DESIGN
architects | engineers

Plaza Suite 1
10 Church Avenue, SE
Roanoke, VA 24011

540.342.6001
spectrumpc.com

BEDFORD COUNTY SHERIFF'S OFFICE EXPANSION

SPECTRUM DESIGN PROJECT NO.: **24112**

COMMONWEALTH OF VIRGINIA
MICHAEL A. RAKES
Lic. No. 28199
05.04.2026
PROFESSIONAL ENGINEER

PROJ. MGR.:	CHECKED BY:	DRAWN BY:
JM	MAR	GAG

SHEET ISSUE DATE:
05.04.2026

PROJECT PHASE:
BID DOCUMENTS

SHEET REVISIONS:

KEY PLAN:

SHEET NAME:

SIGNAGE & PAVEMENT MARKING PLAN

SHEET NUMBER:

C104

EROSION AND SEDIMENT CONTROL SEQUENCE OF CONSTRUCTION

1. A PRECONSTRUCTION MEETING IS TO OCCUR PRIOR TO ANY LAND DISTURBING ACTIVITIES. OWNER, A/E, AND CONTRACTOR MUST BE IN ATTENDANCE. NOTICE IS TO BE GIVEN A MINIMUM OF ONE WEEK PRIOR TO SCHEDULING. ANY FEES WILL BE REQUIRED TO BE PAID PRIOR TO THE PRECONSTRUCTION MEETING.
2. INSTALL CONSTRUCTION ENTRANCE. ALL CONSTRUCTION TRAFFIC IS TO ENTER AND EXIT THROUGH THE CONSTRUCTION ENTRANCE. DURING WET WEATHER, WHEELS ARE TO BE WASHED BEFORE ENTERING PUBLIC ROADWAYS.
3. INSTALL INLET PROTECTION AS SHOWN ON THE PLANS. INSTALL OTHER REMAINING PERIMETER CONTROLS (I.E. SILT FENCE & TREE PROTECTION).
4. COMMENCE DEMOLITION OPERATIONS. UTILITY DEMOLITION TO BE COORDINATED WITH OTHER DEPARTMENTS AS NECESSARY. TEMPORARY OR PERMANENT SEEDING IS TO BE APPLIED WITHIN 7 DAYS TO DENUDED AREAS THAT MAY NOT BE AT FINAL GRADE BUT WILL BE DORMANT FOR MORE THAN 14 DAYS.
5. BEGIN TRENCH EXCAVATION FOR UNDERGROUND UTILITIES AND BEGIN INSTALLATION OF STORM SEWER AND UNDERGROUND STORAGE FACILITY.
6. COMMENCE GRADING OPERATIONS.
7. BASE STONE TO BE INSTALLED OVER PROPOSED ASPHALT AREAS.
8. INSTALL REMAINING STORM SEWER WITH INLET PROTECTION AS SHOWN ON THE PLAN.
9. COMPLETE REMAINING EARTHWORK OPERATIONS.
10. CONTRACTOR TO ENSURE SOIL STABILIZATION MATTING IS INSTALLED PROPERTY AND FINAL CHECKS ARE MADE FOLLOWING THE REQUIREMENTS SET IN C-SSM-05 OF THE VSMH, CURRENT VERSION. CONTRACTOR TO ENSURE MATTING REMAINS IN CONTACT WITH SOIL AND VEGETATION BECOMES ESTABLISHED ABOVE THE MATTING. DISLOCATIONS, FAILURES, BREAKAGE OR WASHOUTS ARE TO BE REPAIRED OR REPLACED IMMEDIATELY BY THE CONTRACTOR AND COORDINATED WITH THE OWNER.
11. INSTALL CURB AND GUTTER. BACKFILL AND SEED AREAS BEHIND CURB IMMEDIATELY AFTER INSTALLATION.
12. INSTALL ASPHALT PAVEMENT. TOPSOIL AND PERMANENT SEEDING TO BE APPLIED TO ALL NON-PAVED AREAS.
13. COMPLETE REMAINING FINE GRADING.
14. UPON PROJECT COMPLETION, ALL NON-PAVED AREAS WITHIN THE LIMITS OF DISTURBANCE ARE TO BE PERMANENTLY SEEDED.

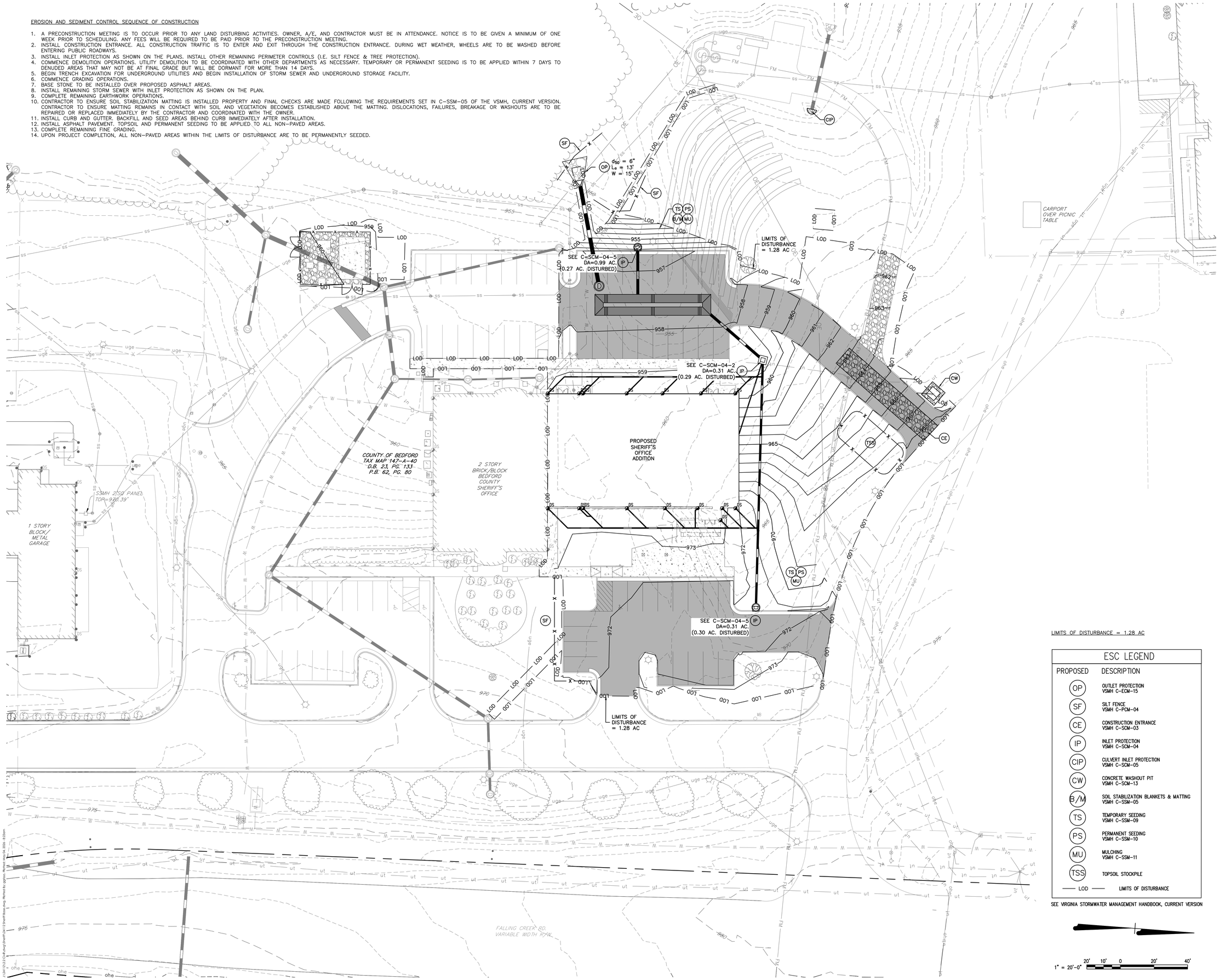

LIMITS OF DISTURBANCE = 1.28 AC

ESC LEGEND	
PROPOSED	DESCRIPTION
OP	OUTLET PROTECTION VSMH C-ECM-15
SF	SILT FENCE VSMH C-PCM-04
CE	CONSTRUCTION ENTRANCE VSMH C-SCM-03
IP	INLET PROTECTION VSMH C-SCM-04
CIP	CULVERT INLET PROTECTION VSMH C-SCM-05
CW	CONCRETE WASHOUT PIT VSMH C-SCM-13
B/M	SOIL STABILIZATION BLANKETS & MATTING VSMH C-SSM-05
TS	TEMPORARY SEEDING VSMH C-SSM-09
PS	PERMANENT SEEDING VSMH C-SSM-10
MU	MULCHING VSMH C-SSM-11
TSS	TOPSOIL STOCKPILE
—— LOD ——	LIMITS OF DISTURBANCE

SEE VIRGINIA STORMWATER MANAGEMENT HANDBOOK, CURRENT VERSION

1" = 20'-0" 20' 10' 0 20' 40'

SPECTRUM DESIGN
architects | engineers

Plaza Suite 1
10 Church Avenue, SE
Roanoke, VA 24011

540.342.6001
spectrumpc.com

BEDFORD COUNTY SHERIFF'S OFFICE EXPANSION

SPECTRUM DESIGN PROJECT NO.: **24112**

COMMONWEALTH OF VIRGINIA
MICHAEL A. RAKES
Lic. No. 28199
05.04.2026
PROFESSIONAL ENGINEER

PROJ. MGR.:	CHECKED BY:	DRAWN BY:
JM	MAR	GAG

SHEET ISSUE DATE:
05.04.2026

PROJECT PHASE:
BID DOCUMENTS

SHEET REVISIONS:

KEY PLAN:

SHEET NAME:

EROSION & SEDIMENT CONTROL PLAN

SHEET NUMBER:

C201

STONE CONSTRUCTION ENTRANCE

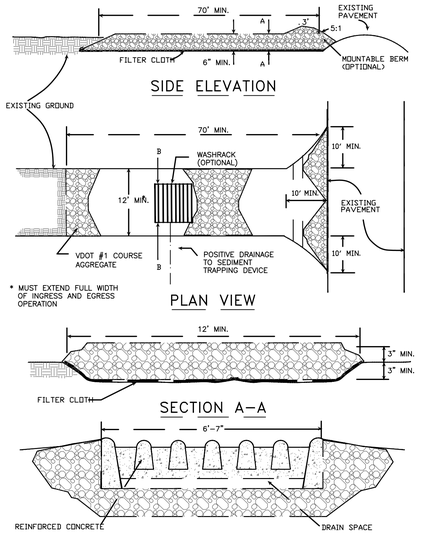

SOURCE: ADAPTED FROM 1983 MARYLAND STANDARDS FOR SOIL EROSION AND SEDIMENT CONTROL, AND VA. DSWC

PLATE. 3.02-1

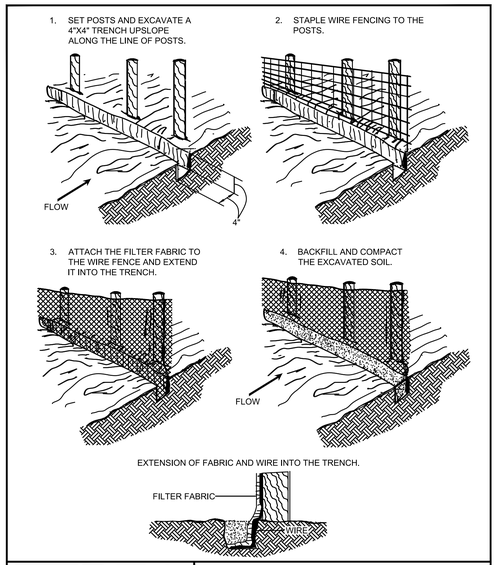

DEQ VIRGINIA DEPARTMENT OF ENVIRONMENTAL QUALITY

CONSTRUCTION OF SILT FENCE WITH WIRE SUPPORT INSTALLATION

v1.1 SOURCE: ADAPTED FROM STRAW & FAB. BARRIERS, SHERWOOD & WYANT

C-PCM-04-2

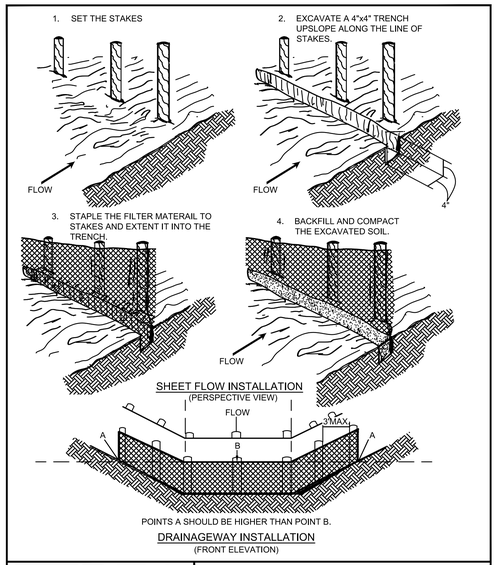

DEQ VIRGINIA DEPARTMENT OF ENVIRONMENTAL QUALITY

CONSTRUCTION OF SILT FENCE WITHOUT WIRE SUPPORT

v1.1 SOURCE: ADAPTED FROM STRAW & FAB. BARRIERS, SHERWOOD & WYANT

C-PCM-04-2B

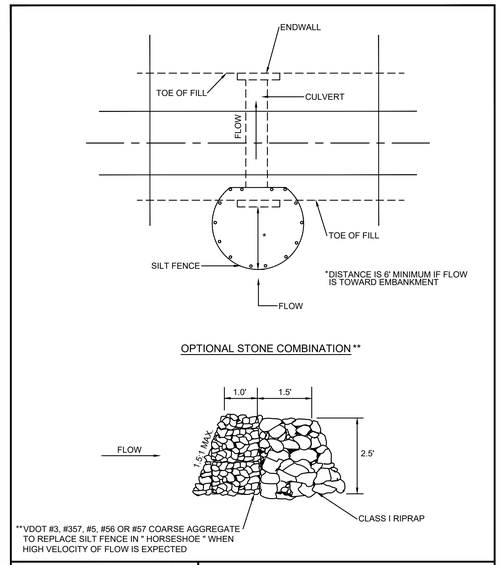

DEQ VIRGINIA DEPARTMENT OF ENVIRONMENTAL QUALITY

SILT FENCE CULVERT INLET PROTECTION

v1.1 SOURCE: VA. DSWC, VDOT

C-SCM-05-1

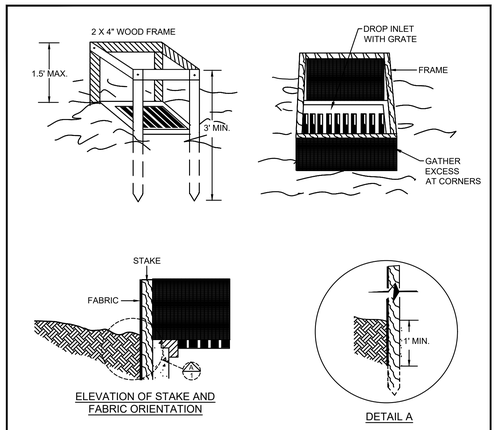

SPECIFIC APPLICATION

THIS METHOD OF INLET PROTECTION IS APPLICABLE WHERE THE INLET DRAINS A RELATIVELY FLAT AREA (SLOPE NO GREATER THAN 5%) WHERE THE INLET SHEET OR OVERLAND FLOWS (NOT EXCEEDING 1 C.F.S.) ARE TYPICAL. THE METHOD SHALL NOT APPLY TO INLETS RECEIVING CONCENTRATED FLOWS, SUCH AS APPLY TO INLETS RECEIVING CONCENTRATED FLOWS, SUCH AS IN STREET OR HIGHWAY MEDIANS.

DEQ VIRGINIA DEPARTMENT OF ENVIRONMENTAL QUALITY

SILT FENCE DROP INLET PROTECTION

v1.1 SOURCE: NC ESC DESIGN MAN.

C-SCM-04-1

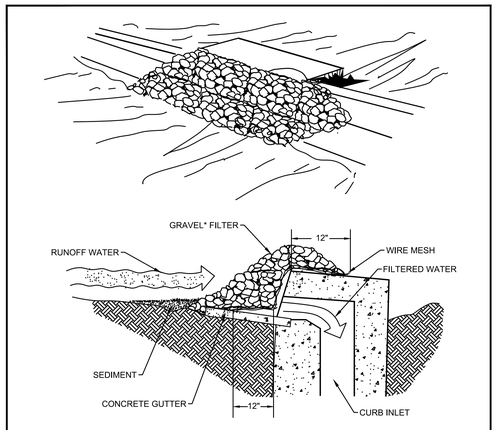

SPECIFIC APPLICATION

THIS METHOD OF INLET PROTECTION IS APPLICABLE AT CURB INLETS WHERE PONDING IN FRONT OF THE STRUCTURE IS NOT LIKELY TO CAUSE INCONVENIENCE OR DAMAGE TO ADJACENT STRUCTURES AND UNPROTECTED AREAS.

* GRAVEL SHALL BE VDOT #3, #357 OR 5 COARSE AGGREGATE.

DEQ VIRGINIA DEPARTMENT OF ENVIRONMENTAL QUALITY

GRAVEL CURB INLET SEDIMENT FILTER

v1.1 SOURCE: VA. DSWC

C-SCM-04-5

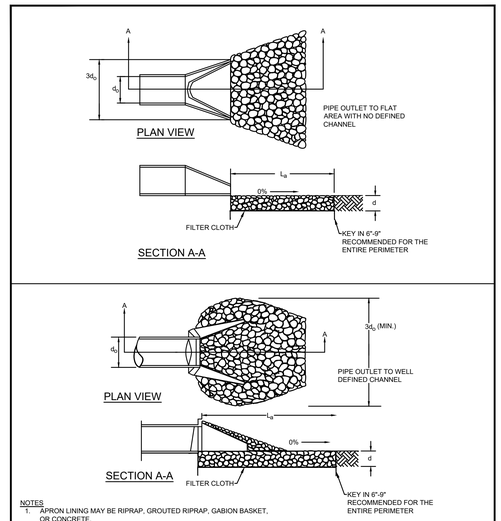

NOTES
1. APRON LINING MAY BE RIPRAP, GROUTED RIPRAP, GABION BASKET, OR CONCRETE.
2. La IS THE LENGTH OF THE RIPRAP APRON AS CALCULATED USING FIGURE C-ECM-15-3 AND FIGURE C-ECM-15-4.
3. d = 1.5 TIMES THE MAXIMUM STONE DIAMETER, BUT NO LESS THAN 6 INCHES.

DEQ VIRGINIA DEPARTMENT OF ENVIRONMENTAL QUALITY

PIPE OUTLET CONDITIONS

v1.1 SOURCE: VA DSWC

C-ECM-15-1

SPECTRUM DESIGN
architects | engineers

Plaza Suite 1
10 Church Avenue, SE
Roanoke, VA 24011

540.342.6001
spectrumpc.com

BEDFORD COUNTY SHERIFF'S OFFICE EXPANSION

SPECTRUM DESIGN PROJECT NO.: **24112**

COMMONWEALTH OF VIRGINIA
MICHAEL A. RAKES
Lic. No. 28199
05.04.2026
PROFESSIONAL ENGINEER

PROJ. MGR.: **JM**
CHECKED BY: **MAR**
DRAWN BY: **GAG**

SHEET ISSUE DATE:
05.04.2026

PROJECT PHASE:
BID DOCUMENTS

SHEET REVISIONS:

KEY PLAN:

SHEET NAME:

EROSION & SEDIMENT CONTROL DETAILS

SHEET NUMBER:

C202

J:\24125\2-2 Cad\dwg\Sheet\24112 Sheet Base.dwg, Plotted By: ggraso, Plotted Area (A: 22D) - 8:23am

TYPICAL TREATMENT–2 SOIL STABILIZATION MATTING INSTALLATION

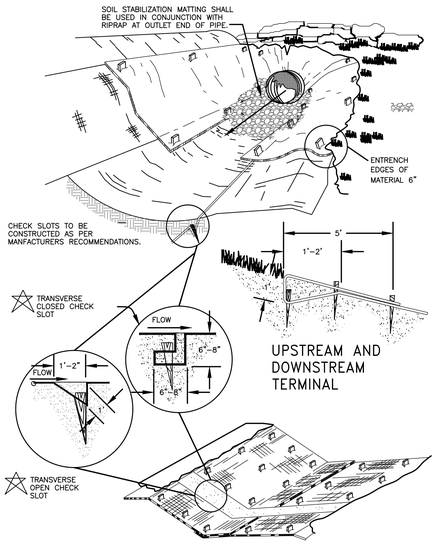

SOURCE: VDOT ROAD AND BRIDGE STANDARDS PLATE: 3.36–4

TYPICAL TREATMENT – 2 SOIL STABILIZATION MATTING SLOPE INSTALLATION

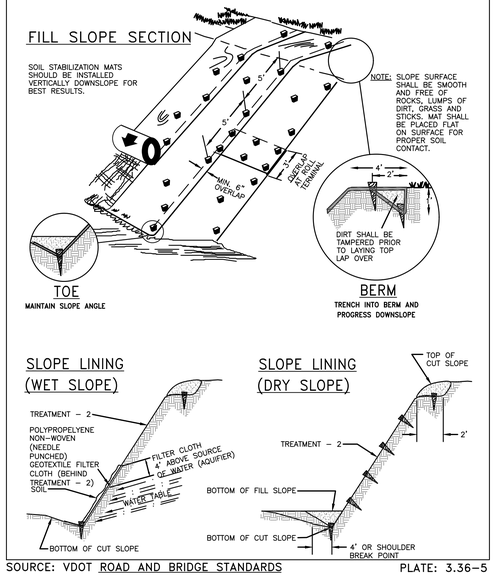

SOURCE: VDOT ROAD AND BRIDGE STANDARDS PLATE: 3.36–5

TYPICAL ORIENTATION OF TREATMENT – 1 (SOIL STABILIZATION BLANKET)

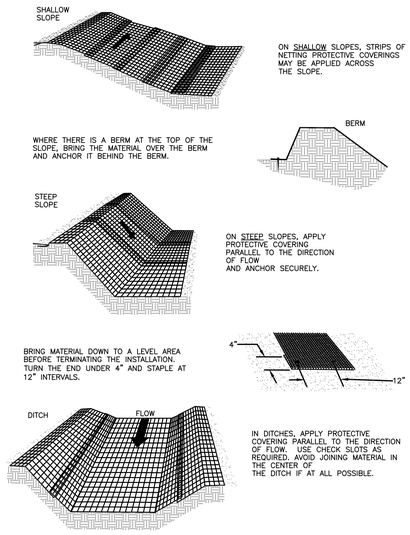

SOURCE: ADAPTED FROM LUDLOW PRODUCTS BROCHURE PLATE: 3.36–1

GENERAL STAPLE PATTERN GUIDE AND RECOMMENDATIONS FOR TREATMENT – 2 (SOIL STABILIZATION MATTING)

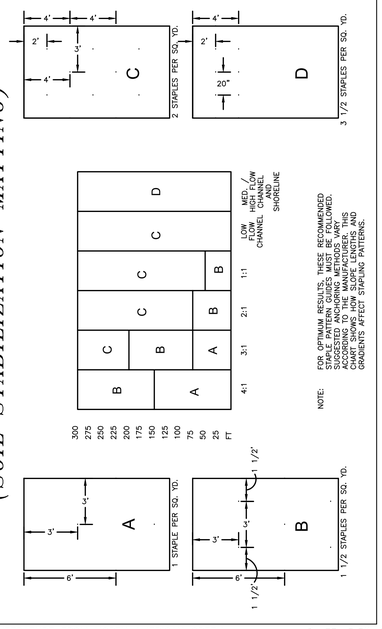

SOURCE: PRODUCT LITERATURE FROM NORTH AMERICAN GREEN PLATE: 3.36–6

STAKES, STAPLES, & PINS FOR INSTALLATION OF TREATMENT – 2 SOIL STABILIZATION MATTING

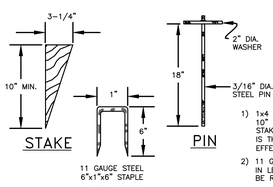

1) 1x4 TRIANGULAR SURVEY STAKE – MINIMUM 10" IN LENGTH. PLACEMENT OF THE STAKE ACROSS THE FLOW OF THE WATER IS THOUGHT TO PROVIDE A "PINBALL EFFECT" TO HELP SLOW THE VELOCITY.
2) 11 GAUGE STEEL – MINIMUM 1" WIDE BY 6" IN LENGTH STEEL STAPLE – 2"x8" STAPLE MAY BE REQUIRED IN CERTAIN SOIL CONDITIONS.
3) STEEL PINS – 3/16 DIAMETER STEEL PIN BY 18" IN LENGTH WITH A 2" DIAMETER WASHER ON TOP. (SEE ILLUSTRATION)

SOURCE: PRODUCT LITERATURE FROM GREENSTREAK, INC. PLATE: 3.36–3

TYPICAL TREATMENT – 1 (SOIL STABILIZATION BLANKET) INSTALLATION CRITERIA

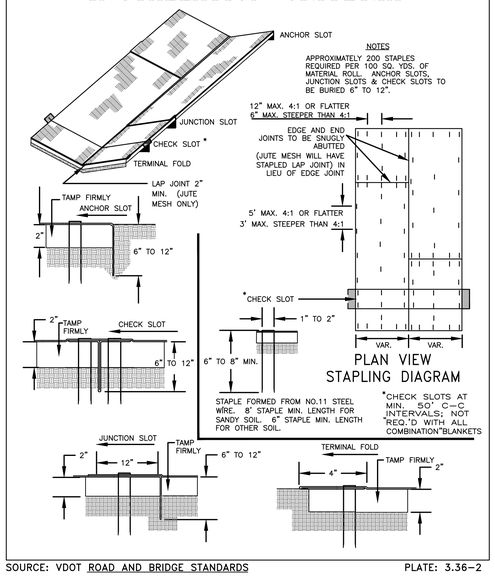

SOURCE: VDOT ROAD AND BRIDGE STANDARDS PLATE: 3.36–2

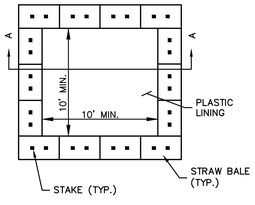

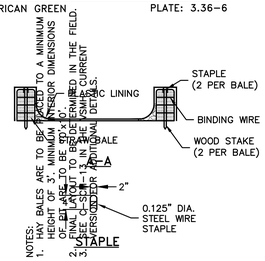

NOTES:
1. HAY BALES ARE TO BE PLACED TO A MINIMUM HEIGHT OF 3' WITH ANCHOR DIMENSIONS OF 6" x 6" ARE TO BE 3'x 3'.
2. FINAL LAYOUT TO BE DETERMINED IN THE FIELD.
3. SEE C-SERIES FOR IN THE CURRENT EROSION & SEDIMENT CONTROL DETAILS.

CONCRETE WASHOUT AREA WITH STRAW BALES

NTS SCALE

SPECTRUM DESIGN
architects | engineers

Plaza Suite 1
10 Church Avenue, SE
Roanoke, VA 24011

540.342.6001
spectrumpc.com

BEDFORD COUNTY SHERIFF'S OFFICE EXPANSION

SPECTRUM DESIGN PROJECT NO.: **24112**

COMMONWEALTH OF VIRGINIA
MICHAEL A. RAKES
Lic. No. 28199
05.04.2026
PROFESSIONAL ENGINEER

PROJ. MGR.: **JM** CHECKED BY: **MAR** DRAWN BY: **GAG**

SHEET ISSUE DATE:
05.04.2026

PROJECT PHASE:
BID DOCUMENTS

SHEET REVISIONS:

KEY PLAN:

SHEET NAME:

EROSION & SEDIMENT CONTROL DETAILS

SHEET NUMBER:

C203

J:\24112\3-2-2 Civil\dwg\Sheet\C24112 Sheet Base.dwg, Plotted By: ggraves, Plotted Area: 24, 2026 - 8:22am

EROSION AND SEDIMENT CONTROL NARRATIVE

RESPONSIBLE LAND DISTURBER

Upon award of the Construction Contract, the Contractor shall employ a Responsible Land Disturber, who is certified by the Department of Environmental Quality (DEQ), to assume this responsibility for the project. The name of this person is to be designated in writing by the Contractor to the State ESC plan approving authority, the A/E, and the Owner along with copies of their certification prior to any land disturbance. The Responsible Land Disturber for this project shall be in charge of and is responsible for carrying out the land–disturbing activities on this project. Should the certified Land Disturber change at any time during the life of this project then the Land Disturbing Permit will become void, and a new Permit must be obtained. Hereinafter RLD shall be interpreted as the Responsible Land Disturber. Relative to the SWPP Plan the RLD shall be the "Operator".

STORM WATER POLLUTION PREVENTION PLAN & REGISTRATION STATEMENT

A Virginia Pollutant Discharge Elimination System (VPDES) Permit for the Discharge of Stormwater from Construction Activities is required for projects disturbing one (1) acre or greater. Disturbance for this project is greater than 1 acre (1.28 acres) and is to conform to the requirements of the VPDES Permit.

PROJECT DESCRIPTION

The purpose of this project is for the building addition and associated site improvements to the Bedford County Sheriff's Office. The site is located at 1345 Falling Creek Rd in Bedford County, adjacent to the limits of the Town of Bedford. Infrastructure extensions and improvements are necessary for the new building additions. Total disturbance for this project is 1.28 acres, 0.71 acres of which are impervious in the post developed condition. The resulting construction will increase the net impervious cover of the site by 0.13 acres. Construction is anticipated to be 8 months, July 2026 through February 2027. For the purposes of this narrative, the "Site" shall be defined as the areas within these subject properties to be disturbed.

EXISTING SITE CONDITIONS

The existing site houses the Bedford County Sheriff's Office main building, several work/storage trailers, and employee parking lots. Disturbed areas surrounding the building are anticipated to improve drainage. Current site runoff is collected and conveyed through underground storm pipes and ultimately conveyed to Skinnels Creek. The existing Sheriff's Office building is to remain with no reduction to the existing footprint. There are no known wetlands or jurisdictional waters on site.

ADJACENT PROPERTY

Generally, the site is surrounded by agricultural and rural properties with large wooded and open spaces within the Bedford County Center Magisterial District. The area to be disturbed is directly bound by Falling Creek Road to the East, the Bedford County Animal Shelter to the North, densely wooded areas to the West, and the maintenance facility to the South.

OFF–SITE AREAS

No off–site disturbance is anticipated by these plans.

Should land disturbance at any off–site area be needed, the Contractor shall submit to Bedford County Department of Planning and Zoning a copy of plans, land disturbing permit, and/or agreement in lieu of approved by the appropriate Federal, State, or local authorities.

Should some material be wasted off–site to a site owned by others or the Contractor, it is the Contractor's responsibility to assure that said source has a current approved Erosion Control Plan in accordance with the Virginia Stormwater Management Handbook, Current Version.

Should borrow, excavation waste or spoil areas proposed not have a current approved ESC Plan, an ESC Plan shall be submitted and approved by the Department of Environmental Quality and local authorities prior to any land disturbance in accordance with the Erosion Control notes in these plans and Virginia State Laws.

SOILS

A geotechnical subsurface investigation has been performed for this project. See report prepared by Hurt & Proffitt, Inc. dated April 16, 2026 in Appendix F of the Narrative.

NRCS Soil Survey information of the existing soils is found in Section 1.0 of the Erosion & Sediment Control and Stormwater Management Plan. Soil boundaries are shown on the Drainage Maps found in Appendix B of the Narrative.

CRITICAL EROSION AREAS

The existing site consists of gravel and paved areas and stabilized grass that may become disturbed during construction activities. Site runoff is to be controlled with erosion, perimeter, sediment, and surface stabilization measures in accordance with local standards and the DEQ Virginia Stormwater Management Handbook, Current Version.

EROSION AND SEDIMENT CONTROL MEASURES

Unless otherwise indicated, all vegetative and structural erosion and sediment control practices will be constructed and maintained in accordance with the minimum standards and specifications to the Virginia Stormwater Managment Handbook, current version. References to VDOT refer to the Virginia Department of Transportation "Road and Bridge Standards and Specifications," latest edition. A copy of the approved ESC Plan and Narrative and the Virginia Stormwater Management Handbook, Current Version, shall be maintained at the jobsite at all times.

EROSION CONTROL MEASURES

1. Outlet Protection (C–ECM–15): Structurally lined aprons or other forms of energy–dissipating devices placed at the outlets of pipes, curb openings, ditch turnouts, or paved channel sections to slow discharge velocity from the outlet to prevent an erosive condition.
   Sequence of Installation: Installed prior to conveyance accepting flow.
   Removal Event: Permanent practice and shall not to be removed.

PERIMETER CONTROL MEASURES

1. Silt Fence (C–PCM–04) & Super Silt Fence (C–PCM–04–3): Temporary sediment barrier consisting of a synthetic filter fabric entrenched and stretched across and attached to supporting posts.
   Sequence of Installation: Prior to any land disturbance.
   Removal Event: Following permanent stabilization of the contributing drainage area.

SEDIMENT CONTROL MEASURES

1. Temporary Stone Construction Entrance (C–SCM–03): A pad with a fabric filter liner underneath the stone located at points of vehicular ingress and egress on a construction site to minimize the amount of sediment, such as dirt or mud, leaving or being tracked from outside the construction site attached to vehicles.
   Sequence of Installation: Prior to any land disturbance.
   Removal Event: Immediately prior to paving.
2. Inlet Protection (C–SCM–04): Sediment filter or an excavated impoundment around a storm drain inlet or curb inlet. Protects inlets of storm sewers from erosion and sedimentation during construction. All storm sewer inlets that are made operable during construction shall be protected so that sediment–laden water cannot enter the conveyance system without first being filtered or otherwise treated to remove sediment.
   Sequence of Installation: Immediately following structure installation or before land disturbance of a contributing drainage are to an existing structure.
   Removal Event: Following permanent stabilization of the contributing drainage area.
3. Culvert Inlet Protection (C–SCM–05): A sediment filter located at the inlets of culverts.
   Sequence of Installation: Immediately following structure installation or before land disturbance of a contributing drainage area to an existing structure.
   Removal Event: Following permanent stabilization of the contributing drainage area.
4. Concrete Washout Pit (C–SCM–13): A temporary excavated or above–ground lined constructed pit or prefabricated container in which truck mixers and equipment can be washed.
   Sequence of Installation: First step prior to construction of any poured concrete.
   Removal Event: Following installation of all concrete site elements.

SURFACE STABILIZATION MEASURES

1. Soil Stabilization Blankets & Matting (C–SSM–05): Protective blankets on a prepared planting area of a steep slope, channel, or shoreline.
   Sequence of Installation: Following establishment of final grade and placement of lime, fertilizer, and seed.
   Removal Event: Not Applicable.
2. Temporary Seeding (C–SSM–09): Establishment of a temporary vegetative cover on disturbved areas by seeding with appropriate rapidly growing annual plants.
   Sequence of Installation: Within 7 days of land disturbing activity when cleared areas will not be brought to final grade within 14 days.
   Maintenance: Areas which fail to establish vegetative cover adequate to prevent rill erosion are to be reseeded.
   Removal Event: As needed for final grading.
3. Permanent Seeding (C–SSM–10): Establishment of a perennial vegetative cover on disturbed areas by planting seed.
   Sequence of Installation: Within 7 days of achieving final grade or as noted above.
   Maintenance: Areas which fail to establish vegetative cover adequate to prevent rill erosion are to be reseeded, following identification of the cause of poor germination. Contractor is responsible for establishment of permanent seed.
   Removal Event: Not Applicable.
4. Mulching (C–SSM–11): Application of a protective blanket of straw or other plan residues/materials to the soil surface during the establishment of temporary and permanent seeding.
   Sequence of Installation: Following establishment of final grade and placement of lime, fertilizer, and seed or in areas which cannot be seeded because of the season.
   Removal Event: Not Applicable, unless used for temporary cover in areas which cannot be seeded because of the season.

MANAGEMENT STRATEGIES

1. The RLD shall amend the SWPP Plan whenever there is a change in design, construction, operation, or maintenance, which has a significant effect on the potential for the discharge of pollutants to surface waters and which has not otherwise been addressed in the plan or if the plan proves to be ineffective in eliminating or significantly minimizing pollutants from sources identified in the permit, or in otherwise achieving the general objectives of controlling pollutants in storm water discharges from construction activities. Also amend to identify any new contractor that will implement a measure of the plan.
2. The RLD shall be responsible for the installation and maintenance of all erosion and sediment control practices maintaining them in good and effective operating condition.
3. The RLD shall notify the Architect/Engineer when the local governing official has inspected and approved all in–place erosion and sediment control devices, required by local ordinances to be in place prior to land disturbance.
4. Construction shall be sequenced so that the duration of grading operations is as brief as possible.
5. Maintenance of inlet and outlet protection shall be given high priority.
6. Temporary seeding or other stabilization shall follow within 7 days after grading, or installation if a temporary measure.
7. Areas which are not to be disturbed shall be clearly marked by flags, signs, etc.
8. No solid materials, including building materials, garbage, and debris shall be discharged to surface waters of the State, except as authorized by a Section 404 permit.
9. Where construction vehicle access routes intersect paved or public roads, provisions shall be made to minimize the transport of sediment by vehicular tracking onto the paved surface. Where sediment is transported onto a paved or public road surface, the road surface shall be cleaned thoroughly at the end of each day. Sediment shall be removed from the roads by shoveling or sweeping and transported to a sediment control disposal area. Street washing shall be allowed only after sediment is removed in this manner. This provision shall apply to individual development lots as well as to larger land–disturbing activities. The generation of dust shall be minimized.
10. Ensure and demonstrate compliance with applicable State and/or local waster disposal, sanitary sewer or septic system regulations.
11. All sediment removed from sediment trapping measures or cleaning operations shall be appropriately wasted so as not to become a dust or sediment problem elsewhere.
12. After achieving adequate stabilization, the temporary E&S controls will be cleaned up and removed.

MAINTENANCE

The contractor shall inspect all erosion control measures immediately after each run–off producing rainfall event, at least daily during prolonged rainfall, at least weekly when no rainfall occurs, and in accordance with any permit regulations. Generally, the following items shall be checked in particular:

1. Inlet protection and sediment traps shall be checked regularly for sediment cleanout. Remove sediment prior to it reaching ½ the design depth of the trap.
2. Silt fences shall be checked regularly for structural/functional integrity. Remove any sediment deposits – do not allow buildup.
3. All seeded areas shall be checked regularly to see that a good stand is maintained. Areas should be fertilized and reseeded as needed.

POTENTIAL POLLUTION SOURCES & STORED MATERIALS

The RLD shall prepare a list of all potential sources of pollution and all construction and waste materials expected to be stored on–site and update as appropriate. Examples would be vehicle fueling area, fuel delivery vehicle, fertilizer, chemicals, temp. sanitary waste facilities, concrete washouts, etc. For each listed item list its location and describe necessary controls to reduce pollutants from these materials including storage practices to minimize exposure to storm water as well as spill prevention and response, schedule of implementation and maintenance necessary for effectiveness.

INSPECTIONS

The RLD shall inspect disturbed areas of the construction site and areas used for storage of materials that are exposed to precipitation, structural control measures, and locations where vehicles enter or exit the site. The inspections shall be conducted at least once every four (4) days and within forty–eight (48) hours after a rain event greater than 0.25" inches.

Disturbed areas and areas used for storage of materials that are exposed to precipitation shall be inspected for evidence of, or the potential for, pollutants entering the drainage system. ESC measures identified in the plan shall be observed to ensure that they are operating correctly. Where discharge locations or points are accessible, they shall be inspected to ascertain whether erosion control measures are effective in preventing significant impacts to receiving waters. Locations where vehicles enter or exit the site shall be inspected for evidence of off–site sediment tracking.

Based on the results of the inspection, the site description identified in the plan and pollution prevention measures shall be revised as appropriate, within seven (7) calendar days following the inspection. Such modifications shall provide for timely implementation of any changes to the plan within seven (7) calendar days following the inspection and before next anticipated storm event, if practical.

REPORTING

A report summarizing the scope of the inspection, names and qualifications of personnel making the inspection, the date of the inspection, major observations, and actions taken as a result of the inspection shall be made and retained by the Contractor. Where no incidents of noncompliance are reported, report shall certify that facility is in compliance plans and any permits; keep reports with this narrative. The report shall be certified in accordance with the permit.

STORM WATER MANAGEMENT

All runoff from the site will be collected, contained, and released to meet current Commonwealth of Virginia Standards and Regulations for Stormwater Quantity as set forth in 9VAC25–850–600 and the Virginia Stormwater Management Handbook, Current Version. The Water Quality requirements will be achieved through the purchase of offsite nutrient credits per 9VAC25–875–590.

UNDERGROUND UTILITY INSTALLATION

Underground utilities are to be installed in accordance with MS–16 criteria and any additional state or local requirements.

PROHIBITION OF NON–STORM WATER DISCHARGES

1. The following non–storm water discharges are allowed: discharges from fire fighting activities; fire hydrant flushing; waters used to wash vehicles where detergents are not used; water used to control dust; potable water sources including waterline flushing; hydrostatic testing; routine external building washdown which does not use detergents; pavement washwaters where spills or leaks of toxic or hazardous materials have not occurred (unless all spill material has been removed) and where detergents are not used; air conditioning condensate; uncontaminated compressor condensate; uncontaminated ground water or spring water; and foundation or footing drains where flows are not contaminated with process materials such as solvents.
2. Except for allowed discharges listed above, sources of non–storm water that are combined with storm water discharges from the construction site must be identified on the plan. The plan shall identify and ensure the implementation of appropriate pollution prevention measures for the non–storm water components.

CONTRACTORS

Identify for each measure identified in the plan, the Contractor/subcontractor that will implement the measure. All contractors identified above must sign the following certification statement. All certifications must be included in the SWPP Plan.

"I certify under penalty of law that I understand the terms and conditions of this Virginia Pollutant Discharge Elimination System (VPDES) general permit that authorizes the storm water discharges from the construction activity identified as part of this certification."

Name & title of signatory (Responsible Corporate Official, General Partner, or Sole Proprietor)
Name, address & phone of contracting firm
Address of other identifying description of the site
Date certification made

DISPLAY & STATUS OF PLAN

Plan with a copy of the permit must be maintained on–site and kept available for County inspectors at all times from the date of commencement of construction to the date of final stabilization. Note that this narrative and RLD's log of inspection reports and all certifications are part of the plan (keep with this narrative).

The Plan with all attachments, reports, etc. shall be retained by the contractor for at least three (3) years from the date that the site is finally stabilized.

SCHEDULE

Record of the dates when major grading activities occur, when construction activities temporarily or permanently cease on a portion of the site, and when stabilization measures are initiated.

Perimeter controls shall be installed after clearing and grubbing necessary for installation of the measure, but before the clearing and grubbing for the remaining portions of the site. The perimeter controls shall be actively maintained until final stabilization of those portions of the site upward of the perimeter control. Temporary perimeter controls may be removed after final stabilization.

Stabilization measures shall be initiated as soon as practicable in portions of the site where construction activities have temporarily or permanently ceased, but in no case more than seven (7) days after the construction activities have temporarily or permanently ceased, unless construction activity will resume within twenty–one (21) days after ceasing. Permanent seeding shall be done within 30 days if construction has permanently ceased.

Whenever water seeps from a slope face, adequate subsurface interception (french drain) shall be provided discharging to the nearest suitable stabilized channel.

All temporary ESC measures shall be removed within 30 days after final site stabilization or after the temporary measures are no longer needed, unless otherwise authorized by the local program administrator. Trapped sediment and other disturbed soil areas resulting from the disposition of temporary measures shall be permanently stabilized to prevent further erosion and sedimentation.

NOTICE OF TERMINATION

When the site has been finally stabilized and all the storm water discharges from construction activities that are authorized by the permit are eliminated, the permit holder must submit a Notice of Termination that is certified in accordance with permit. The terms and conditions of the permit shall remain in effect until a completed Notice of Termination is submitted to the County. Also, coordinate project close out with Bedford County and utilize the VSMP Project Completion Form.

Erosion and Sediment Control Criteria, Techniques, and Methods: Minimum Standards

NOTE:
✓• CHECKMARK INDICATES ITEM IS APPLICABLE TO PROJECT.
N/A• N/A – NOT APPLICABLE.

MS–1 STABILIZATION
✓ Permanent or temporary soil stabilization shall be applied to denuded areas (bare soil) within 7 days after final grade is reached on any portion of the site. Temporary soil stabilization will be applied within 7 days to denuded areas that may not be at final grade but will remain dormant for longer than 14 days. Permanent stabilization will be applied to areas that are to be left dormant for more than 1 year.

MS–2 STOCKPILES, WASTE, AND BORROW AREAS
✓ During construction of the project, soil stockpiles and borrow areas shall be stabilized or protected with sediment trapping measures. The applicant is responsible for the temporary protection and permanent stabilization of all soil stockpiles on site as well as borrow areas and soil intentionally transported from the project site. Locations of stockpiles and borrow pits should be identified on the site plans, and stockpiles should have perimeter erosion and sediment control measures installed as well as located with enough setback distance from streams, waterways, and entrances/line of sight. Soil stockpiles should not exceed 2H:1V.

MS–3 PERMANENT VEGETATION
✓ A permanent vegetative cover will be established on denuded areas not otherwise permanently stabilized. Permanent vegetation will not be considered established until a ground cover is achieved that, is uniform, mature enough to survive and will inhibit erosion.

MS–4 FIRST–STEP MEASURES
N/A Sediment basins and traps, perimeter dikes, sediment barriers and other measures intended to trap sediment shall be constructed as a first step in any land–disturbing activity and will be made functional before upslope land disturbance takes place.

MS–5 EARTHEN STRUCTURE STABILIZATION
N/A Stabilization measures will be applied to earthen structures, such as dams, dikes, channels, and diversions immediately after installation.

MS–6 TRAPS AND BASINS
N/A Sediment traps and sediment basins will be designed and constructed based upon the total drainage area to be served by the trap or basin. Sediment traps should not be used for more than 18 months unless they are designed as a permanent impoundment.

A. The minimum storage capacity of a sediment trap shall be 134 cubic yards per acre of drainage area, and the trap will only control drainage areas less than 3 acres.

B. Surface runoff from disturbed areas that is comprised of flow from drainage areas greater than or equal to three acres shall be controlled by a sediment basin. The minimum storage capacity of a sediment basin shall be 134 cubic yards per acre of drainage area. The outfall system shall, at a minimum, maintain the structural integrity of the basin during a twenty–five year storm of 24–hour duration. Runoff coefficients used in runoff calculations shall correspond to a bare earth condition or those conditions expected to exist while the sediment basin is utilized.

MS–7 CUT AND FILL SLOPES
✓ Cut and fill slopes will be designed and constructed in a manner that will minimize erosion. Slopes that are found to be eroding excessively within 1 year of permanent stabilization will be provided with additional slope stabilizing measures until the problem is corrected.

MS–8 CONCENTRATED RUNOFF
✓ Concentrated runoff will not flow down cut or fill slopes unless contained within an adequate temporary or permanent channel, flume, or slope drain structure.

MS–9 WATER SEEPS
✓ When water seeps from a slope face, adequate drainage or other protection will be provided.

MS–10 INLET PROTECTION
✓ All storm sewer inlets that are made operable during construction will be protected so that sediment–laden water cannot enter the conveyance system without first being filtered or otherwise treated to remove sediment.

MS–11 OUTLET PROTECTION
✓ Before newly constructed stormwater conveyance channels or pipes are made operational, adequate outlet protection and any required temporary or permanent channel lining will be installed in both the conveyance channel and receiving channel.

MS–12 WATERCOURSE CONSTRUCTION
N/A When work in a live watercourse is performed, precautions will be taken to minimize encroachment, control sediment transport, and stabilize the work area to the greatest extent possible during construction. Non–erodible material will be used for the construction of causeways and cofferdams. Earthen fill may be used for these structures if armored by non–erodible cover materials. Check dams, silt fence, and other perimeter controls should not be placed across a live watercourse.

MS–13 TEMPORARY VEHICULAR STREAM CROSSING
N/A When a live watercourse must be crossed by construction vehicles more than twice in any 6–month period, a temporary vehicular stream crossing constructed of non–erodible material will be provided.

MS–14 OTHER WATERCOURSE REGULATIONS
N/A All applicable federal, state, and local regulations pertaining to working in or crossing live watercourses will be met.

MS–15 BED AND BANK STABILIZATION
N/A The bed and banks of a watercourse will be stabilized immediately after work in the watercourse is completed.

MS–16 UTILITY CONSTRUCTION
✓ Underground utility lines will be installed in accordance with the following standards in addition to other applicable criteria:
a. No more than 500 linear feet of trench may be opened at one time.
b. Excavated material will be placed on the uphill side of trenches.
c. Effluent from dewatering operations will be filtered or passed through an approved sediment trapping device, or both, and discharged in a manner that does not adversely affect flowing streams or offsite property.
d. Material used for backfilling trenches will be properly compacted in order to minimize erosion and promote stabilization.
e. Re–stabilization will be accomplished in accordance with Part V or teh Regulation, 9VAC25–875–470 et. seq.
f. Applicable safety requirements will be met.

MS–17 VEHICULAR TRACKING AND CONSTRUCTION ENTRANCES
✓ Where construction vehicle access routes intersect paved or public roads, provisions will be made to minimize the transport of sediment by vehicular tracking onto the paved surface. Where sediment is transported onto a paved or public road surface, the road surface will be cleaned thoroughly at the end of each day. Sediment will be removed from the roads by shoveling or sweeping and transported to a sediment control disposal area. Street washing will be allowed only after sediment is removed in this manner. This provision will apply to individual development lots as well as to larger land–disturbing activities.

MS–18 TEMPORARY CONTROL REMOVAL
✓ All temporary erosion and sediment control measures will be removed within 30 days after final site stabilization or after the temporary measures are no longer needed, unless otherwise authorized by the VESMP or VESCP authority. Trapped sediment and the disturbed soil areas resulting from the disposition of temporary measures will be permanently stabilized to prevent further erosion and sedimentation.

MS–19 ADEQUATE STORMWATER CONVEYANCE TO ADEQUATE STORMWATER OUTFALL
Properties and waterways downstream from development sites will be protected from sediment deposition, erosion, and damage due to increases in volume, velocity, and peak flow rate of stormwater runoff for the stated frequency storm of 24–hour duration. Stream restoration and relocation projects that incorporate natural channel design concepts are not manmade channels and shall be exempt from any flow rate capacity and velocity requirements for natural or manmade channels:

a. ✓ Concentrated stormwater runoff leaving a development site shall be discharged directly into an adequate natural or manmade receiving channel, pipe or storm sewer system. For those sites where runoff is discharged into a pipe or pipe system, downstream stability analyses at the outfall of the pipe or pipe system shall be performed.
b. ✓ Adequacy of all channels and pipes shall be verified in the following manner:
   1. The applicant shall demonstrate that the total drainage area to the point of analysis within the channel is 100 times greater than the contributing drainage area of the project in question; or
   2.
   (a) Natural channels shall be analyzed by the use of a two–year storm to verify that stormwater will not overtop channel banks nor cause erosion of channel bed or banks.
   (b) All previously constructed manmade channels shall be analyzed by the use of a 10–year storm to verify that stormwater will not overtop the stormwater's banks and by the use of a two–year storm to demonstrate that stormwater will not cause erosion of channel bed or banks; and
   (c) Pipes and storm sewer systems shall be analyzed by the use of a 10–year storm to verify that stormwater will be contained within the pipe or system.
c. ✓ If existing natural receiving channels or previously constructed man–made channels or pipes are not adequate, the applicant shall:
   1. Improve the channels to a condition where a 10–year storm will not overtop the banks and a two–year storm will not cause erosion to the channel, the bed, or the banks;
   2. Improve the pipe or pipe system to a condition where the 10–year storm is contained within the appurtenances;
   3. Develop a site design that will not cause the predevelopment peak runoff rate from a two–year storm to increase when runoff outfalls into a natural channel or will not cause the predevelopment peak runoff rate from a 10–year storm to increase when runoff outfalls into a manmade channel; or
   4. Provide a combination of channel improvement, stormwater detention, or other measures which is satisfactory to the VESCP or VESMP authority to prevent downstream erosion.
d. ✓ The applicant shall provide evidence of permission to make the improvements.
e. ✓ All hydrologic analyses shall be based on the existing watershed characteristics and the ultimate development condition of the subject project.
f. ✓ If the applicant chooses an option that includes stormwater detention, the applicant shall obtain approval from the VESCP or VESMP authority the VESCP for maintenance of the detention facilities. The plan shall set forth the maintenance requirements of the facility and the person responsible for performing the maintenance.
g. ✓ Outfall from a detention facility shall be discharged to a receiving channel, and energy dissipators shall be placed at the outfall of all detention facilities as necessary to provide a stabilized transition from the facility to the receiving channel.
h. ✓ All on–site channels must be verified to be adequate.
i. ✓ Increased volumes of sheet flows that may cause erosion or sedimentation on adjacent property shall be diverted to a stable outlet, adequate channel, pipe, or pipe system or to a detention facility.
j. N/A In applying these stormwater management criteria, individual lots or parcels in a residential, commercial, or industrial development shall not be considered to be separate development projects. Instead, the development, as a whole, shall be considered to be a single development project. Hydrologic parameters that reflect the ultimate development condition shall be used in all engineering calculations.
k. ✓ All measures used to protect properties and waterways shall be employed in a manner that minimizes impacts on the physical, chemical and biological integrity of rivers, streams, and other waters of the state.
l. N/A Any plan approved prior to July 1, 2014, that provides for stormwater management that addresses any flow rate capacity and velocity requirements for natural or manmade channels shall satisfy the flow rate capacity and velocity requirements for natural or manmade channels if the practices are designed to (i) detain the water quality volume and to release it over 48 hours; (ii) detain and release over a 24–hour period the expected rainfall resulting from the one year, 24–hour storm; and (iii) reduce the allowable peak flow rate resulting from the 1.5–year, two–year, and 10–year 24–hour storms to a level that is less than or equal to the peak flow rate from the site assuming it was in a good forested condition, achieved through multiplication of the forested peak flow rate by a reduction factor that is equal to the runoff volume from the site when it was in a good forested condition divided by the runoff volume from the site in its proposed condition, and shall be exempt from any flow rate capacity and velocity requirements for natural or manmade channels as defined in any regulations promulgated pursuant to § 62.1–44.15:54 or 62.1–44.15:65 of the Code of Virginia (ESCL).
m. ✓ For plans approved on and after July 1, 2014, the flow rate capacity and velocity requirements of § 62.1–44.15:52 A of the Code of Virginia (ESCL) and this subdivision 19 shall be satisfied by compliance with water quantity requirements in the VESMA and attendant regulations, unless such land–disturbing activities (i) are in accordance with provisions for time limits on applicability of approved design criteria in 9VAC25–875–480 or grandfathering in 9VAC25–875–490, in which case the flow rate capacity and velocity requirements of § 62.1–44.15:52 A of the Code of Virginia (ESCL) shall apply; or (ii) are exempt pursuant to § 62.1–44.15:34 G of the Code of Virginia (VESMA).
n. ✓ Compliance with the water quantity minimum standards set out in 9VAC25–875–600 shall be deemed to satisfy the requirements of this subdivision 19.

GENERAL EROSION & SEDIMENT CONTROL NOTES

1. Unless otherwise indicated, all vegetative and structural erosion and sediment control practices will be constructed and maintained according to minimum standards and specifications of the Virginia Stormwater Management Handbook, Current Version, and Virginia Regulations (9VAC25-875) *Virginia Erosion and Stormwater Management Regulations*.
2. The plan approving authority must be notified one week prior to the pre-construction conference, one week prior to the commencement of land disturbing activities, and one week prior to final inspection.
3. All erosion and sediment control measures are to be placed prior to or as the first step in clearing.
4. A copy of the approved erosion and sediment control plan shall be maintained on the site at all times.
5. Prior to commencing land disturbing activities in areas other than indicated on these plans (including, but not limited to, off-site borrow or waste areas), the contractor shall submit a supplementary erosion control plan to the owner for review and approval by the plan approving authority.
6. The contractor is responsible for installation of any additional erosion control measures necessary to prevent erosion and sedimentation as determined by the plan approving authority.
7. All disturbed areas are to drain to approved sediment control measures at all times during land disturbing activities and during site development until final stabilization is achieved.
8. During dewatering operations, water will be pumped into an approved filtering device.
9. The contractor shall inspect all erosion control measures periodically and after each runoff-producing rainfall event. Any necessary repairs or cleanup to maintain the effectiveness of the erosion control devices shall be made immediately.

MULCHING TABLE

SEEDING AREA REQUIREMENTS (UNLESS OTHERWISE DIRECTED BY LANDSCAPE PLANS)

MULCHES	RATE (LBS/1000 SF)	NOTES
STRAW OR HAY	70 – 90	FREE FROM WEEDS AND COARSE MATTER. MUST BE ANCHORED. SPREAD BY MULCH BLOWER OR BY HAND. USE MIN. 2 TONS PER ACRE FOR WINTER COVER
FIBER MULCH	35 (MIN.)	DO NOT USE FIBER MULCH FOR WINTER COVER OR DURING HOT, DRY, PERIODS. APPLY AS SLURRY. WHEN FIBER MULCH IS THE ONLY AVAILABLE MULCH DURING PERIODS WHEN STRAW SHOULD BE USED, APPLY AT A MIN. RATE OF 2000 LBS/ACRE OR 45 LBS/1,000 SF

HARDWOOD MULCH REQUIREMENTS (UNLESS OTHERWISE DIRECTED BY LANDSCAPE PLANS)

MULCHES	RATE (CY/1000 SF)	NOTES
SHREDDED HARDWOOD BARK	1 – 2	MUST BE FREE OF WEEDS, DEBRIS, AND COARSE MATTER. AIR–DRIED. DO NOT USE IN FINE TURF AREAS. APPLY WITH MULCH BLOWER, CHIP HANDLER, OR BY HAND.

SEEDING TABLE

PLANT MATERIAL FOR TEMPORARY SEEDING REQUIREMENTS*

PLANTING DATES	ACCEPTABLE PLANT SPECIES	SCIENTIFIC NAME	SEEDING RATE (LBS/ACRE)
SEPT 1 – FEB 15	50/50 MIX OF ANNUAL RYEGRASS AND WINTER RYE	LOLIUM MULTIFLORUM AND SECALE CEREALE	50–100
FEB 16– APR 30**	ANNUAL RYEGRASS	LOLIUM MULTIFLORUM	60–100
MAY 1** – AUG 31	GERMAN MILLET	SETARIA ITALICA	50

SOIL pH	LIMING RATE (TON/ACRE)
BELOW 4.2	3
4.2 TO 5.2	2
5.2 TO 6	1

*MULCH IMMEDIATELY IN ACCORDANCE WITH MULCHING TABLE ON THIS SHEET AND VA STORMWATER MANAGEMENT HANDBOOK, CURRENT VERSION.
**THE SHIFT DATE FOR ANNUAL RYE TO GERMAN MILLET SHOULD BE APRIL 15 FOR THE PIEDMONT AND COASTAL PLAIN, RATHER THAN MAY 1.

PERMANENT SEEDING MIXTURE REQUIREMENTS*

SEED SPECIES	PERCENT OF TOTAL	SEEDING RATE (LBS/ACRE)
TURF–TYPE TALL FESCUE	95–100%	150–200
KENTUCKY BLUEGRASS	0–5%	
IMPROVED PERENNIAL RYEGRASS	0–5%	

*MULCH IMMEDIATELY IN ACCORDANCE WITH MULCHING TABLE ON THIS SHEET AND VA STORMWATER MANAGEMENT HANDBOOK, CURRENT VERSION.

SEED MIXES ARE SUGGESTIONS FOUND IN THE VA STORMWATER MANAGEMENT HANDBOOK AND ARE SUBJECT TO MODIFICATION BASED ON SITE–SPECIFIC CONDITIONS BY AN AGRONOMIST OR OTHER QUALIFIED REVEGETATION PROFESSIONALS. ALL SEED RATES ARE EXPRESSED AS PURE LIVE SEED (PLS) AS SHOWN IN TABLE C–SSM–10–9 OF THE VA STORMWATER MANAGEMENT HANDBOOK, CURRENT VERSION.

SPECTRUM DESIGN
architects | engineers
Plaza Suite 1
10 Church Avenue, SE
Roanoke, VA 24011
540.342.6001
spectrumpc.com

BEDFORD COUNTY SHERIFF'S OFFICE EXPANSION

SPECTRUM DESIGN PROJECT NO.: 24112

COMMONWEALTH OF VIRGINIA
MICHAEL A. RAKES
Lic. No. 28199
05.04.2026
PROFESSIONAL ENGINEER

PROJ. MGR.:	CHECKED BY:	DRAWN BY:
JM	MAR	GAG

SHEET ISSUE DATE:
05.04.2026

PROJECT PHASE:
BID DOCUMENTS

SHEET REVISIONS:

KEY PLAN:

SHEET NAME:
EROSION & SEDIMENT CONTROL NOTES

SHEET NUMBER:
C204

J:\24112\23-Civil\dwg\Sheet\24112 Sheet Base.dwg Plotted By: jgallas, Plotted: Mon, 04, 2026 - 8:20am

STORM 'A' PROFILE

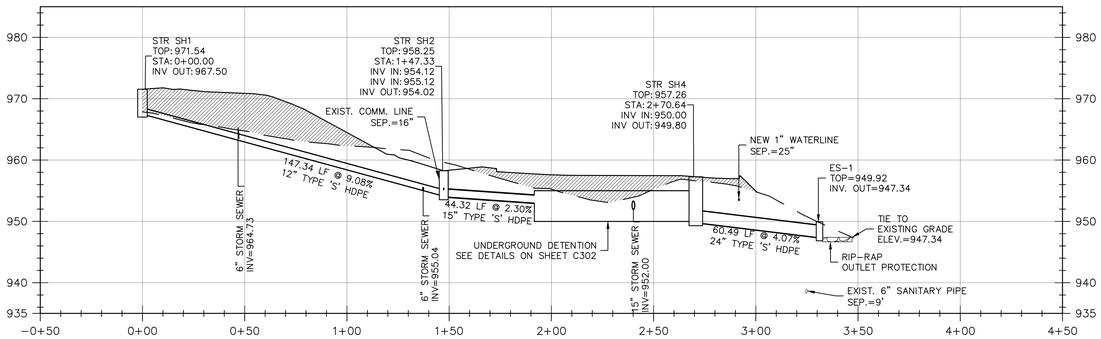

LEGEND

EXISTING SURFACE PROFILE

PROPOSED SURFACE PROFILE

AREA OF FILL

VERTICAL: 1" = 10'-0" (10' 5' 0 10' 20')

HORIZONTAL: 1" = 30'-0" (30' 20' 10' 0 30' 60')

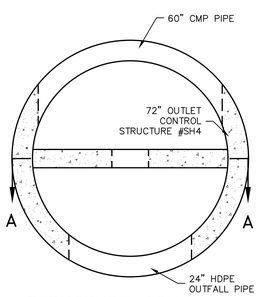

STRUCTURE #SH4

NO SCALE

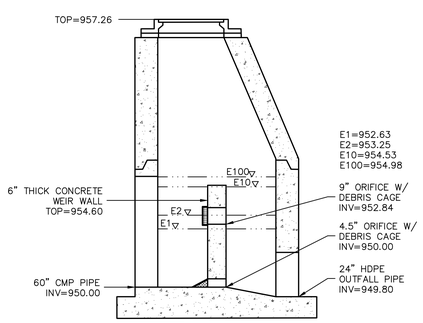

STRUCTURE #SH4 SECTION A-A

NO SCALE

STORMWATER MANAGEMENT MAINTENANCE PLAN

GENERALLY, THE OWNER IS RESPONSIBLE FOR PROVIDING OR COORDINATING ALL FACILITY INSPECTIONS AND ANY REQUIRED MAINTENANCE. REQUIREMENTS LISTED ARE TO BE TAKEN AS A MINIMUM AND DO NOT REPRESENT THE FULL LIMIT OF RESPONSIBILITY. ANY STANDING WATER THAT IS TO BE REMOVED FROM THE SITE DURING MAINTENANCE OPERATIONS MUST BE DISPOSED OF PER THE VIRGINIA EROSION AND SEDIMENT CONTROL HANDBOOK, CURRENT EDITION, AND ANY LOCAL REQUIREMENTS.

INSPECTION OF THE SWM FACILITY SHOULD BE PERFORMED AT A MINIMUM OF ONCE PER YEAR. CLEANING SHOULD BE DONE AT THE DISCRETION OF THE INDIVIDUALS RESPONSIBLE TO MAINTAIN PROPER STORAGE AND FLOW. WHILE MAINTENANCE CAN GENERALLY BE PERFORMED YEAR ROUND, IT SHOULD BE SCHEDULED DURING A RELATIVELY DRY SEASON. THE FOLLOWING IS THE RECOMMENDED PROCEDURE TO INSPECT THE SYSTEM IN SERVICE:

1. UTILIZE THE ACCESS MANHOLE TO MEASURE THE SEDIMENT BUILDUP.
2. INSPECT EACH HEADER, ALL LATERALS, AND OUTLET PIPES FOR SEDIMENT BUILD UP, OBSTRUCTIONS, OR OTHER PROBLEMS. OBSTRUCTIONS SHOULD BE REMOVED AT THIS TIME.
3. IF REQUIRED, CLEANING SHALL BE PERFORMED IDEALLY BY THE JETVAC PROCESS, ELIMINATING THE NEED FOR CONFINED ENTRY.
   - 3.1. A FIXED FLOOR CLEANING NOZZLE WITH REAR FACING NOZZLE SPREAD OF 45 INCHES OR MORE IS PREFERABLE.
   - 3.2. APPLY MULTIPLE PASSES OF JETVAC UNTIL BACKFLUSH WATER IS CLEAN.
   - 3.3. VACUUM MANHOLE SUMP AS REQUIRED.
4. ONCE CLEANING IS COMPLETED, OR IF NO CLEANING IS REQUIRED, ALL CAPS, LIDS, COVERS, ETC. ARE TO BE REPLACED. RECORD OBSERVATIONS AND ANY ACTIONS TAKEN.
5. INSPECT AND CLEAN UPSTREAM MANHOLES AS NECESSARY.

SPECTRUM DESIGN
architects | engineers

Plaza Suite 1
10 Church Avenue, SE
Roanoke, VA 24011

540.342.6001
spectrumpc.com

BEDFORD COUNTY SHERIFF'S OFFICE EXPANSION

SPECTRUM DESIGN PROJECT NO.: **24112**

COMMONWEALTH OF VIRGINIA
MICHAEL A. RAKES
Lic. No. 28199
05.04.2026
PROFESSIONAL ENGINEER

PROJ. MGR.: **JM**
CHECKED BY: **MAR**
DRAWN BY: **GAG**

SHEET ISSUE DATE:
05.04.2026

PROJECT PHASE:
BID DOCUMENTS

SHEET REVISIONS:

KEY PLAN:

SHEET NAME:
STORM SEWER PROFILES & STORMWATER MANAGEMENT PLAN

SHEET NUMBER:
C301

J:\24112\2-Civil\dwg\24112 Plan Inlet.dwg, Plotted By: ggarcia, Plotted: May 04, 2026 - 8:23am

PROJECT SUMMARY

CALCULATION DETAILS
- LOADING = HS20/HS25
- APPROX. LINEAR FOOTAGE = 148 LF

STORAGE SUMMARY
- STORAGE VOLUME REQUIRED = 2,790 CF
- PIPE STORAGE VOLUME = 2,904 CF
- BACKFILL STORAGE VOLUME = 0 CF
- TOTAL STORAGE PROVIDED = 2,904 CF

PIPE DETAILS
- DIAMETER = 60"
- CORRUGATION = 5x1
- GAGE = 16
- COATING = ALT2
- WALL TYPE = SOLID
- BARREL SPACING = 30"

BACKFILL DETAILS
- WIDTH AT ENDS = 12"
- ABOVE PIPE = 0"
- WIDTH AT SIDES = 12"
- BELOW PIPE = 0"

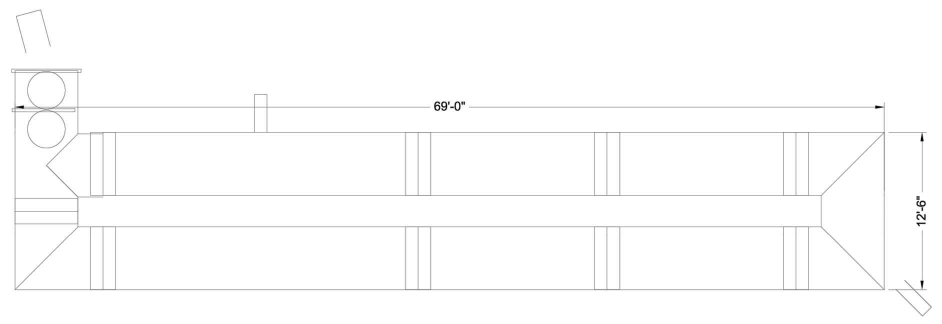

ASSEMBLY
SCALE: 1" = 10'

NOTES
- ALL RISER AND STUB DIMENSIONS ARE TO CENTERLINE. ALL ELEVATIONS, DIMENSIONS, AND LOCATIONS OF RISERS AND INLETS, SHALL BE VERIFIED BY THE ENGINEER OF RECORD PRIOR TO RELEASING FOR FABRICATION.
- ALL FITTINGS AND REINFORCEMENT COMPLY WITH ASTM A998.
- ALL RISERS AND STUBS ARE $2\frac{2}{3}$" x $\frac{1}{2}$" CORRUGATION AND 16 GAGE UNLESS OTHERWISE NOTED.
- RISERS TO BE FIELD TRIMMED TO GRADE.
- QUANTITY OF PIPE SHOWN DOES NOT PROVIDE EXTRA PIPE FOR CONNECTING THE SYSTEM TO EXISTING PIPE OR DRAINAGE STRUCTURES. OUR SYSTEM AS DETAILED PROVIDES NOMINAL INLET AND/OR OUTLET PIPE STUB FOR CONNECTION TO EXISTING DRAINAGE FACILITIES. IF ADDITIONAL PIPE IS NEEDED IT IS THE RESPONSIBILITY OF THE CONTRACTOR.
- BAND TYPE TO BE DETERMINED UPON FINAL DESIGN.
- THE PROJECT SUMMARY IS REFLECTIVE OF THE DYODS DESIGN, QUANTITIES ARE APPROX. AND SHOULD BE VERIFIED UPON FINAL DESIGN AND APPROVAL. FOR EXAMPLE, TOTAL EXCAVATION DOES NOT CONSIDER ALL VARIABLES SUCH AS SHORING AND ONLY ACCOUNTS FOR MATERIAL WITHIN THE ESTIMATED EXCAVATION FOOTPRINT.
- THESE DRAWINGS ARE FOR CONCEPTUAL PURPOSES AND DO NOT REFLECT ANY LOCAL PREFERENCES OR REGULATIONS. PLEASE CONTACT YOUR LOCAL CONTECH REP FOR MODIFICATIONS.

C:\EXPORTS\TEMPLATES\CMP_V10.DWG 10/18/2019 10:02 AM

The design and information shown on this drawing is provided as a service to the project owner, engineer and contractor by Contech Engineered Solutions LLC ("Contech"). Neither this drawing, nor any part thereof, may be used, reproduced or modified in any manner without the prior written consent of Contech. Failure to comply is done at the user's own risk and Contech expressly disclaims any liability or responsibility for such use.

If discrepancies between the supplied information upon which the drawing is based and actual field conditions are encountered as site work progresses, these discrepancies must be reported to Contech immediately for re-evaluation of the design. Contech accepts no liability for designs based on missing, incomplete or inaccurate information supplied by others.

DATE	REVISION DESCRIPTION	BY

CONTECH ENGINEERED SOLUTIONS LLC
www.ContechES.com
9025 Centre Pointe Dr., Suite 400, West Chester, OH 45069
800-338-1122 513-645-7000 513-645-7993 FAX

CONTECH CMP DETENTION SYSTEMS
CONTECH DYODS DRAWING

DYO622826 Bedford County Sheriff's Office
60" Rev
Bedford, VA
DETENTION SYSTEM

PROJECT No.: 74728	SEQ. No.: 622826	DATE: 4/2/2026
DESIGNED: DYO	DRAWN: DYO	
CHECKED: DYO	APPROVED: DYO	
SHEET NO.: 1		

TABLE 1:

DIAMETER, D	MIN. COVER	CORR. PROFILE
6"-10"	12"	1 1/2" x 1/4"
12"-48"	12"	2 2/3" x 1/2"
>48"-96"	12"	3" x 1", 5" x 1"
>96"	D/8	3" x 1", 5" x 1"

- STRUCTURAL BACKFILL MUST EXTEND TO LIMITS OF THE TABLE
- TOTAL HEIGHT OF COMPACTED COVER FOR CONVENTIONAL HIGHWAY LOADS IS MEASURED FROM TOP OF PIPE TO BOTTOM OF FLEXIBLE PAVEMENT OR TOP OF RIGID PAVEMENT
- ULTRAFLO ALSO AVAILABLE FOR SIZES 18" - 120" WITH 3/4"x 3/4"x 7 1/2" CORRUGATION

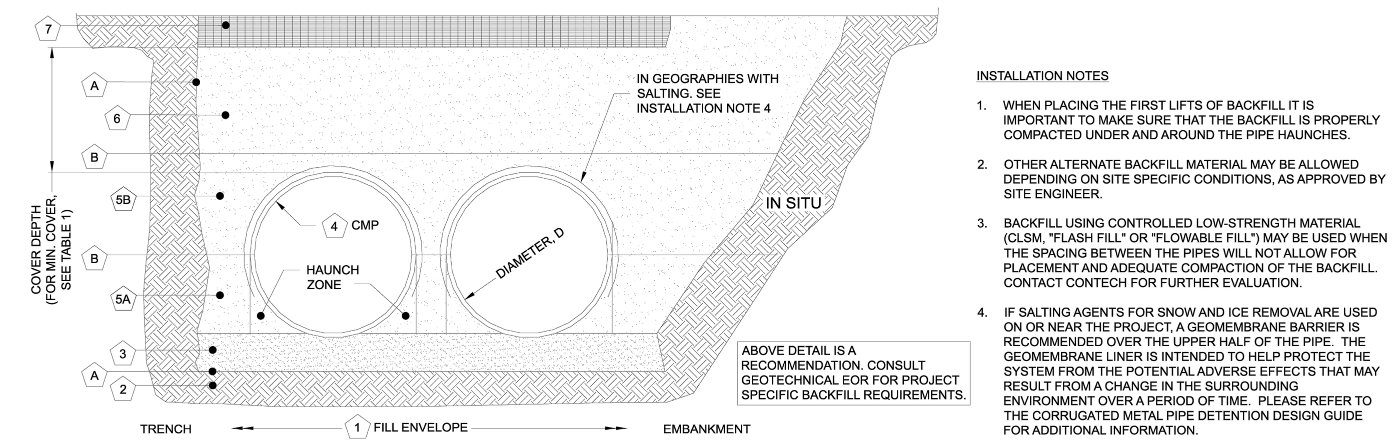

INSTALLATION NOTES

1. WHEN PLACING THE FIRST LIFTS OF BACKFILL IT IS IMPORTANT TO MAKE SURE THAT THE BACKFILL IS PROPERLY COMPACTED UNDER AND AROUND THE PIPE HAUNCHES.
2. OTHER ALTERNATE BACKFILL MATERIAL MAY BE ALLOWED DEPENDING ON SITE SPECIFIC CONDITIONS, AS APPROVED BY SITE ENGINEER.
3. BACKFILL USING CONTROLLED LOW-STRENGTH MATERIAL (CLSM, "FLASH FILL" OR "FLOWABLE FILL") MAY BE USED WHEN THE SPACING BETWEEN THE PIPES WILL NOT ALLOW FOR PLACEMENT AND ADEQUATE COMPACTION OF THE BACKFILL. CONTACT CONTECH FOR FURTHER EVALUATION.
4. IF SALTING AGENTS FOR SNOW AND ICE REMOVAL ARE USED ON OR NEAR THE PROJECT, A GEOMEMBRANE BARRIER IS RECOMMENDED OVER THE UPPER HALF OF THE PIPE. THE GEOMEMBRANE LINER IS INTENDED TO HELP PROTECT THE SYSTEM FROM THE POTENTIAL ADVERSE EFFECTS THAT MAY RESULT FROM A CHANGE IN THE SURROUNDING ENVIRONMENT OVER A PERIOD OF TIME. PLEASE REFER TO THE CORRUGATED METAL PIPE DETENTION DESIGN GUIDE FOR ADDITIONAL INFORMATION.

TABLE 2: SOLID STANDARD

CMP DETENTION AND CMP DRAINAGE STANDARD BACKFILL SPECIFICATIONS

	MATERIAL LOCATION	MATERIAL SPECIFICATION	DESCRIPTION	
1	FILL ENVELOPE WIDTH	PER ENGINEER OF RECORD	MINIMUM TRENCH WIDTH MUST ALLOW ROOM FOR PROPER COMPACTION OF HAUNCH MATERIALS UNDER THE PIPE. THE SUGGESTED MINIMUM TRENCH WIDTH, OR EOR RECOMMENDATION: PIPE ≤ 12": D + 16" PIPE > 12": 1.5D + 12"	MINIMUM EMBANKMENT WIDTH (IN FEET) FOR INITIAL FILL ENVELOPE: PIPE < 24": 3.0D PIPE 24" - 144": D + 4'0" PIPE > 144": D + 10'0"
2	FOUNDATION	**AASHTO 26.5.2** OR PER ENGINEER OF RECORD	PRIOR TO PLACING THE BEDDING, THE FOUNDATION MUST BE CONSTRUCTED TO A UNIFORM AND STABLE GRADE. IN THE EVENT THAT UNSUITABLE FOUNDATION MATERIALS ARE ENCOUNTERED DURING EXCAVATION, THEY SHALL BE REMOVED AND FOUNDATION BROUGHT BACK TO GRADE WITH A FILL MATERIAL APPROVED BY THE ENGINEER OF RECORD.	
3	BEDDING	**AASHTO M 43: 3, 357, 4, 467, 5, 56, 57** (APPROVED REGIONAL EQUIVALENTS INCLUDE CA-7)	ENGINEER OF RECORD TO DETERMINE IF BEDDING IS REQUIRED. PIPE MAY BE PLACED ON THE TRENCH BOTTOM OF A RELATIVELY LOOSE, NATIVE SUITABLE WELL GRADED GRANULAR MATERIAL THAT IS ROUGHLY SHAPED TO FIT THE BOTTOM OF THE PIPE, 2" MIN DEPTH. THE BEDDING MATERIAL MAY BE SUITABLE FOUNDATION SOILS CONFORMING TO AASHTO SOIL CLASSIFICATIONS A1, A2, OR A3 WITH MAXIMUM PARTICLE SIZE OF 3" PER AASHTO 26.3.8.1	
4			CORRUGATED METAL PIPE	
5A	CRITICAL BACKFILL	**AASHTO M 145: A-1, A-2, A-3 ***	HAUNCH ZONE MATERIAL SHALL BE HAND SHOVELED OR SHOVEL SLICED INTO PLACE TO ALLOW FOR PROPER COMPACTION WITHOUT SOFT SPOTS. BACKFILL SHALL BE PLACED IN 8" +/- LOOSE LIFTS AND COMPACTED TO 90% STANDARD PROCTOR PER AASHTO T 99. BACKFILL SHALL BE PLACED SUCH THAT THERE IS NO MORE THAN A THREE LIFT (24") DIFFERENTIAL BETWEEN ANY OF THE PIPES AT ANY TIME DURING THE BACKFILL PROCESS. THE BACKFILL SHOULD BE ADVANCED ALONG THE LENGTH OF THE SYSTEM TO AVOID DIFFERENTIAL LOADING. WELL GRADED GRANULAR MATERIAL WHICH MAY CONTAIN SMALL AMOUNTS OF SILT OR CLAY AND MAXIMUM PARTICLE SIZE OF 3" (PER AASHTO 26.3.8.1 AND 12.4-1.3).	
5B	BACKFILL	**AASHTO M 145: A-1, A-2, A-3**		
6	COVER MATERIAL	UP TO MIN. COVER - SEE 5A AND 5B ABOVE ABOVE MIN. COVER - PER ENGINEER OF RECORD	COVER MATERIAL MAY INCLUDE NON-BITUMINOUS, GRANULAR ROAD BASE MATERIAL WITHIN MIN COVER LIMITS	
7	RIGID OR FLEXIBLE PAVEMENT (IF APPLICABLE)	PER ENGINEER OF RECORD	FLEXIBLE PAVEMENT SHOULD NOT BE COUNTED AS PART OF THE FILL HEIGHT OVER THE CMP. FINAL BACKFILL MATERIAL SELECTION AND COMPACTION REQUIREMENTS SHALL FOLLOW THE PROJECT PLANS AND SPECIFICATIONS PER THE ENGINEER OF RECORD.	
A	OPTIONAL SIDE GEOTEXTILE	NONE	GEOTEXTILE LAYER IS RECOMMENDED ON SIDES OF EXCAVATION TO PREVENT SOIL MIGRATION.	
B	OPTIONAL GEOTEXTILE BETWEEN LAYERS	NONE	IF SOIL TYPES DIFFER AT ANY POINT ABOVE PIPE INVERT, A GEOTEXTILE LAYER IS RECOMMENDED TO BE PLACED BETWEEN THE LAYERS TO PREVENT SOIL MIGRATION.	

NOTES:
- FOR MULTIPLE BARREL INSTALLATIONS, THE RECOMMENDED STANDARD SPACING BETWEEN PARALLEL PIPE RUNS SHALL BE THE PIPE DIAMETER /2 BUT NO LESS THAN 12" FOR DIAMETERS <72". FOR 72" AND LARGER DIAMETERS, THE MINIMUM SPACING IS 36". CONTACT YOUR CONTECH REPRESENTATIVE FOR NONSTANDARD SPACING.
- * APPROVED REGIONAL EQUIVALENTS FOR SECTION 5A INCLUDE CA-7, CODOT #67, MIDOT 2G, 34G, OR 21AA STONE OR GRAVEL; #8; #57; MIDOT 6A, 2G, 3G, 34G.

MANUFACTURER RECOMMENDED BACKFILL

NOT TO SCALE

C:\EXPORTS\TEMPLATES\CMP_V10.DWG 10/18/2019 10:02 AM
CONTECH ENGINEERED SOLUTIONS LLC www.ContechES.com 9025 Centre Pointe Dr., Suite 400, West Chester, OH 45069 800-338-1122 513-645-7000 513-645-7993 FAX
CONTECH CMP DETENTION SYSTEMS CONTECH DYODS DRAWING
DYO622826 Bedford County Sheriff's Office 60" Rev Bedford, VA DETENTION SYSTEM
PROJECT No.: 74728 SEQ. No.: 622826 DATE: 4/2/2026 DESIGNED: DYO DRAWN: DYO CHECKED: DYO APPROVED: DYO SHEET NO.: 1

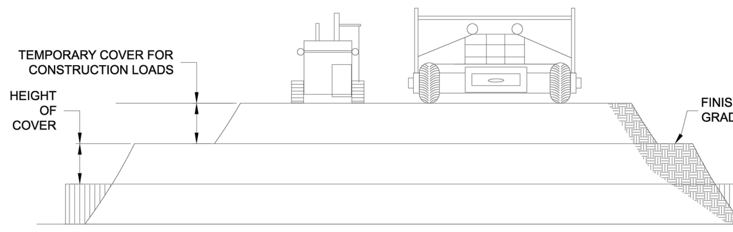

CONSTRUCTION LOADS

FOR TEMPORARY CONSTRUCTION VEHICLE LOADS, AN EXTRA AMOUNT OF COMPACTED COVER MAY BE REQUIRED OVER THE TOP OF THE PIPE. THE HEIGHT-OF-COVER SHALL MEET THE MINIMUM REQUIREMENTS SHOWN IN THE TABLE BELOW. THE USE OF HEAVY CONSTRUCTION EQUIPMENT NECESSITATES GREATER PROTECTION FOR THE PIPE THAN FINISHED GRADE COVER MINIMUMS FOR NORMAL HIGHWAY TRAFFIC.

PIPE SPAN, INCHES	AXLE LOADS (kips)			
	18-50	50-75	75-110	110-150
	MINIMUM COVER (FT)			
12-42	2.0	2.5	3.0	3.0
48-72	3.0	3.0	3.5	4.0
78-120	3.0	3.5	4.0	4.0
126-144	3.5	4.0	4.5	4.5

*MINIMUM COVER MAY VARY, DEPENDING ON LOCAL CONDITIONS. THE CONTRACTOR MUST PROVIDE THE ADDITIONAL COVER REQUIRED TO AVOID DAMAGE TO THE PIPE. MINIMUM COVER IS MEASURED FROM THE TOP OF THE PIPE TO THE TOP OF THE MAINTAINED CONSTRUCTION ROADWAY SURFACE.

CONSTRUCTION LOADING DIAGRAM

SCALE: N.T.S.

SPECIFICATION FOR DESIGNED DETENTION SYSTEM:

SCOPE
THIS SPECIFICATION COVERS THE MANUFACTURE AND INSTALLATION OF THE DESIGNED DETENTION SYSTEM DETAILED IN THE PROJECT PLANS.

MATERIAL
THE MATERIAL SHALL CONFORM TO THE APPLICABLE REQUIREMENTS LISTED BELOW:

ALUMINIZED TYPE 2 STEEL COILS SHALL CONFORM TO THE REQUIREMENTS OF AASHTO M-274 OR ASTM A-92.

THE GALVANIZED STEEL COILS SHALL CONFORM TO THE REQUIREMENTS OF AASHTO M-218 OR ASTM A-929.

THE POLYMER COATED STEEL COILS SHALL CONFORM TO THE REQUIREMENTS OF AASHTO M-246 OR ASTM A-742.

THE ALUMINUM COILS SHALL CONFORM TO THE APPLICABLE OF AASHTO M-197 OR ASTM B-744.

CONSTRUCTION LOADS
CONSTRUCTION LOADS MAY BE HIGHER THAN FINAL LOADS. FOLLOW THE MANUFACTURER'S OR NCSPA GUIDELINES.

PIPE
THE PIPE SHALL BE MANUFACTURED IN ACCORDANCE TO THE APPLICABLE REQUIREMENTS LISTED BELOW:

ALUMINIZED TYPE 2: AASHTO M-36 OR ASTM A-760

GALVANIZED: AASHTO M-36 OR ASTM A-760

POLYMER COATED: AASHTO M-245 OR ASTM A-762

ALUMINUM: AASHTO M-196 OR ASTM B-745

APPLICABLE

HANDLING AND ASSEMBLY
SHALL BE IN ACCORDANCE WITH NCSP'S (NATIONAL CORRUGATED STEEL PIPE ASSOCIATION) FOR ALUMINIZED TYPE 2, GALVANIZED OR POLYMER COATED STEEL. SHALL BE IN ACCORDANCE WITH THE MANUFACTURER'S RECOMMENDATIONS FOR ALUMINUM PIPE.

REQUIREMENTS

INSTALLATION
SHALL BE IN ACCORDANCE WITH AASHTO STANDARD SPECIFICATIONS FOR HIGHWAY BRIDGES, SECTION 26, DIVISION II DIVISION II OR ASTM A-798 (FOR ALUMINIZED TYPE 2, GALVANIZED OR POLYMER COATED STEEL) OR ASTM B-788 (FOR ALUMINUM PIPE) AND IN CONFORMANCE WITH THE PROJECT PLANS AND SPECIFICATIONS. IF THERE ARE ANY INCONSISTENCIES OR CONFLICTS THE CONTRACTOR SHOULD DISCUSS AND RESOLVE WITH THE SITE ENGINEER.

IT IS ALWAYS THE RESPONSIBILITY OF THE CONTRACTOR TO FOLLOW OSHA GUIDELINES FOR SAFE PRACTICES.

NOTE:
THESE DRAWINGS ARE FOR CONCEPTUAL PURPOSES AND DO NOT REFLECT ANY LOCAL PREFERENCES OR REGULATIONS. PLEASE CONTACT YOUR LOCAL CONTECH REP FOR MODIFICATIONS.

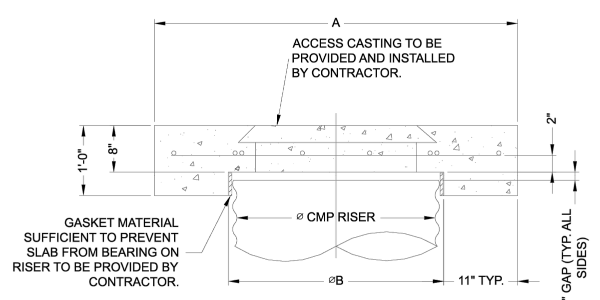

SECTION VIEW

⌀ CMP RISER	A	⌀ B	REINFORCING	**BEARING PRESSURE (PSF)
24"	⌀ 4' 4'X4'	26"	#5 @ 12" OCEW #5 @ 12" OCEW	2,410 1,780
30"	⌀ 4'-6" 4'-6" X 4'-6"	32"	#5 @ 12" OCEW #5 @ 12" OCEW	2,120 1,530
36"	⌀ 5' 5' X 5'	38"	#5 @ 10" OCEW #5 @ 10" OCEW	1,890 1,350
42"	⌀ 5'-6" 5'-6" X 5'-6"	44"	#5 @ 10" OCEW #5 @ 9" OCEW	1,720 1,210
48"	⌀ 6' 6' X 6'	50"	#5 @ 9" OCEW #5 @ 8" OCEW	1,600 1,100

REINFORCING TABLE

** ASSUMED SOIL BEARING CAPACITY

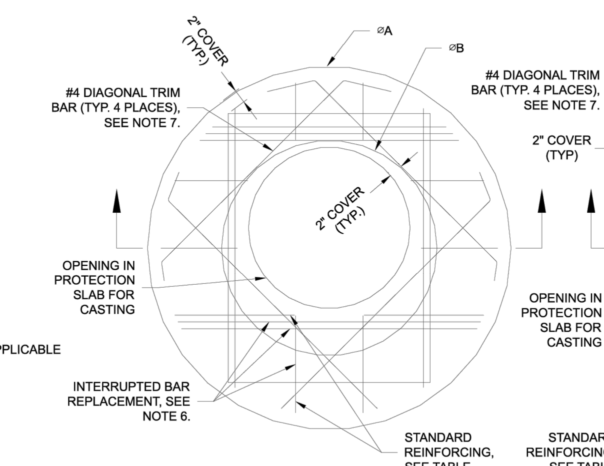

ROUND OPTION PLAN VIEW

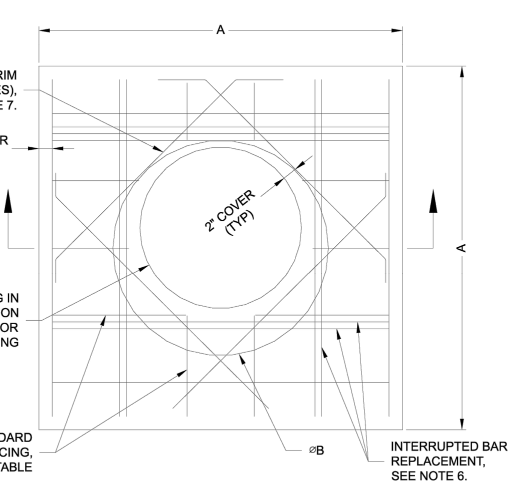

SQUARE OPTION PLAN VIEW

NOTES:

1. DESIGN IN ACCORDANCE WITH AASHTO, 17th EDITION.
2. DESIGN LOAD HS25.
3. EARTH COVER = 1' MAX.
4. CONCRETE STRENGTH = 3,500 psi
5. REINFORCING STEEL = ASTM A615, GRADE 60.
6. PROVIDE ADDITIONAL REINFORCING AROUND OPENINGS EQUAL TO THE BARS INTERRUPTED, HALF EACH SIDE. ADDITIONAL BARS TO BE IN THE SAME PLANE.
7. TRIM OPENING WITH DIAGONAL #4 BARS, EXTEND BARS A MINIMUM OF 12" BEYOND OPENING, BEND BARS AS REQUIRED TO MAINTAIN BAR COVER.
8. PROTECTION SLAB AND ALL MATERIALS TO BE PROVIDED AND INSTALLED BY CONTRACTOR.
9. DETAIL DESIGN BY DELTA ENGINEERING, BINGHAMTON, NY.

MANHOLE CAP DETAIL

SCALE: N.T.S.

C:\EXPORTS\TEMPLATES\CMP_V10.DWG 10/18/2019 10:02 AM
CONTECH ENGINEERED SOLUTIONS LLC www.ContechES.com 9025 Centre Pointe Dr., Suite 400, West Chester, OH 45069 800-338-1122 513-645-7000 513-645-7993 FAX
CONTECH CMP DETENTION SYSTEMS CONTECH DYODS DRAWING
DYO622826 Bedford County Sheriff's Office 60" Rev Bedford, VA DETENTION SYSTEM
PROJECT No.: 74728 SEQ. No.: 622826 DATE: 4/2/2026 DESIGNED: DYO DRAWN: DYO CHECKED: DYO APPROVED: DYO SHEET NO.: 1

CMP DETENTION INSTALLATION GUIDE

PROPER INSTALLATION OF A FLEXIBLE UNDERGROUND DETENTION SYSTEM WILL ENSURE LONG-TERM PERFORMANCE. THE CONFIGURATION OF THESE SYSTEMS OFTEN REQUIRES SPECIAL CONSTRUCTION PRACTICES THAT DIFFER FROM CONVENTIONAL FLEXIBLE PIPE CONSTRUCTION. CONTECH ENGINEERED SOLUTIONS STRONGLY SUGGESTS SCHEDULING A PRE-CONSTRUCTION MEETING WITH YOUR LOCAL SALES ENGINEER TO DETERMINE IF ADDITIONAL MEASURES, NOT COVERED IN THIS GUIDE, ARE APPROPRIATE FOR YOUR SITE.

FOUNDATION

CONSTRUCT A FOUNDATION THAT CAN SUPPORT THE DESIGN LOADING APPLIED BY THE PIPE AND ADJACENT BACKFILL WEIGHT AS WELL AS MAINTAIN ITS INTEGRITY DURING CONSTRUCTION.

IF SOFT OR UNSUITABLE SOILS ARE ENCOUNTERED, REMOVE THE POOR SOILS DOWN TO A SUITABLE DEPTH AND THEN BUILD UP TO THE APPROPRIATE ELEVATION WITH A COMPETENT BACKFILL MATERIAL. THE STRUCTURAL FILL MATERIAL GRADATION SHOULD NOT ALLOW THE MIGRATION OF FINES, WHICH CAN CAUSE SETTLEMENT OF THE DETENTION SYSTEM OR PAVEMENT ABOVE. IF THE STRUCTURAL FILL MATERIAL IS NOT COMPATIBLE WITH THE UNDERLYING SOILS AN ENGINEERING FABRIC SHOULD BE USED AS A SEPARATOR. IN SOME CASES, USING A STIFF REINFORCING GEOGRID REDUCES OVER EXCAVATION AND REPLACEMENT FILL QUANTITIES.

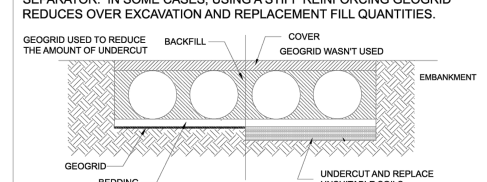

GRADE THE FOUNDATION SUBGRADE TO A UNIFORM OR SLIGHTLY SLOPING GRADE. IF THE SUBGRADE IS CLAY OR RELATIVELY NON-POROUS AND THE CONSTRUCTION SEQUENCE WILL LAST FOR AN EXTENDED PERIOD OF TIME, IT IS BEST TO SLOPE THE GRADE TO ONE END OF THE SYSTEM. THIS WILL ALLOW EXCESS WATER TO DRAIN QUICKLY, PREVENTING SATURATION OF THE SUBGRADE.

GEOMEMBRANE BARRIER

THE RESISTIVITY OF A PROJECT SITE MAY CHANGE OVER TIME DUE TO THE USE OF VARIOUS SALTING, DE-ICING, AND AGRICULTURAL AGENTS APPLIED ON OR NEAR THE AREA. TO MITIGATE THE POTENTIAL IMPACT OF THESE AGENTS, AN HDPE MEMBRANE LINER WILL BE INSTALLED ON THE CROWN OF EACH PIPE, CREATING AN IMPERMEABLE BARRIER. THIS MEASURE IS DESIGNED TO PROTECT THE SYSTEM FROM ENVIRONMENTAL CHANGES THAT COULD LEAD TO PREMATURE CORROSION AND REDUCE THE OVERALL SERVICE LIFE.

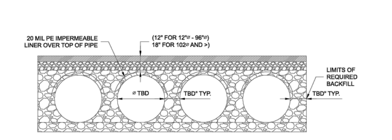

IN-SITU TRENCH WALL

IF EXCAVATION IS REQUIRED, THE TRENCH WALL NEEDS TO BE CAPABLE OF SUPPORTING THE LOAD THAT THE PIPE SHEDS AS THE SYSTEM IS LOADED. IF SOILS ARE NOT CAPABLE OF SUPPORTING THESE LOADS, THE PIPE CAN DEFLECT. PERFORM A SIMPLE SOIL PRESSURE CHECK USING THE APPLIED LOADS TO DETERMINE THE LIMITS OF EXCAVATION BEYOND THE SPRING LINE OF THE OUTER MOST PIPES.

IN MOST CASES THE REQUIREMENTS FOR A SAFE WORK ENVIRONMENT AND PROPER BACKFILL PLACEMENT AND COMPACTION TAKE CARE OF THIS CONCERN.

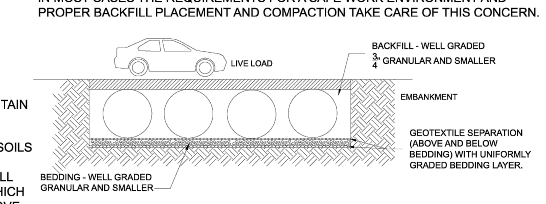

BACKFILL PLACEMENT

MATERIAL SHALL BE WORKED INTO THE PIPE HAUNCHES BY MEANS OF SHOVEL-SLICING, RODDING, AIR TAMPER, VIBRATORY ROD, OR OTHER EFFECTIVE METHODS.

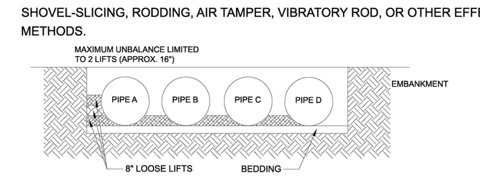

IF AASHTO T99 PROCEDURES ARE DETERMINED INFEASIBLE BY THE GEOTECHNICAL ENGINEER OF RECORD, COMPACTION IS CONSIDERED ADEQUATE WHEN NO FURTHER YIELDING OF THE MATERIAL IS OBSERVED UNDER THE COMPACTOR, OR UNDER FOOT, AND THE GEOTECHNICAL ENGINEER OF RECORD (OR REPRESENTATIVE THEREOF) IS SATISFIED WITH THE LEVEL OF COMPACTION.

FOR LARGE SYSTEMS, CONVEYOR SYSTEMS, BACKHOES WITH LONG REACHES OR DRAGLINES WITH STONE BUCKETS MAY BE USED TO PLACE BACKFILL. ONCE MINIMUM COVER FOR CONSTRUCTION LOADING ACROSS THE ENTIRE WIDTH OF THE SYSTEM IS REACHED, ADVANCE THE EQUIPMENT TO THE END OF THE RECENTLY PLACED FILL, AND BEGIN THE SEQUENCE AGAIN UNTIL THE SYSTEM IS COMPLETELY BACKFILLED. THIS TYPE OF CONSTRUCTION SEQUENCE PROVIDES ROOM FOR STOCKPILED BACKFILL DIRECTLY BEHIND THE BACKHOE, AS WELL AS THE MOVEMENT OF CONSTRUCTION TRAFFIC. MATERIAL STOCKPILES ON TOP OF THE BACKFILLED DETENTION SYSTEM SHOULD BE LIMITED TO 8- TO 10-FEET HIGH AND MUST PROVIDE BALANCED LOADING ACROSS ALL BARRELS. TO DETERMINE THE PROPER COVER OVER THE PIPES TO ALLOW THE MOVEMENT OF CONSTRUCTION EQUIPMENT SEE TABLE 1, OR CONTACT YOUR LOCAL CONTECH SALES ENGINEER.

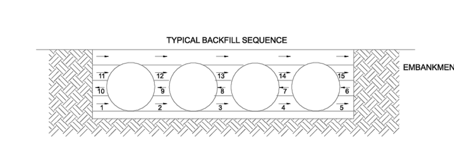

WHEN FLOWABLE FILL IS USED, YOU MUST PREVENT PIPE FLOATATION. TYPICALLY, SMALL LIFTS ARE PLACED BETWEEN THE PIPES AND THEN ALLOWED TO SET-UP PRIOR TO THE PLACEMENT OF THE NEXT LIFT. THE ALLOWABLE THICKNESS OF THE CLSM LIFT IS A FUNCTION OF A PROPER BALANCE BETWEEN THE UPLIFT FORCE OF THE CLSM, THE OPPOSING WEIGHT OF THE PIPE, AND THE EFFECT OF OTHER RESTRAINING MEASURES. THE PIPE CAN CARRY LIMITED FLUID PRESSURE WITHOUT PIPE DISTORTION OR DISPLACEMENT, WHICH ALSO AFFECTS THE CLSM LIFT THICKNESS. YOUR LOCAL CONTECH SALES ENGINEER CAN HELP DETERMINE THE PROPER LIFT THICKNESS.

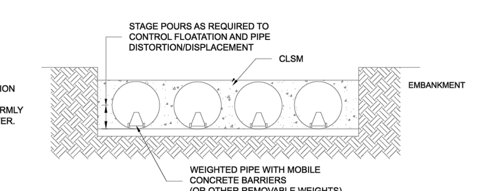

CONSTRUCTION LOADING

TYPICALLY, THE MINIMUM COVER SPECIFIED FOR A PROJECT ASSUMES H-20 LIVE LOAD. BECAUSE CONSTRUCTION LOADS OFTEN EXCEED DESIGN LIVE LOADS, INCREASED TEMPORARY MINIMUM COVER REQUIREMENTS ARE NECESSARY. SINCE CONSTRUCTION EQUIPMENT VARIES FROM JOB TO JOB, IT IS BEST TO ADDRESS EQUIPMENT SPECIFIC MINIMUM COVER REQUIREMENTS WITH YOUR LOCAL CONTECH SALES ENGINEER DURING YOUR PRE-CONSTRUCTION MEETING.

ADDITIONAL CONSIDERATIONS

BECAUSE MOST SYSTEMS ARE CONSTRUCTED BELOW-GRADE, RAINFALL CAN RAPIDLY FILL THE EXCAVATION; POTENTIALLY CAUSING FLOATATION AND MOVEMENT OF THE PREVIOUSLY PLACED PIPES. TO HELP MITIGATE POTENTIAL PROBLEMS, IT IS BEST TO START THE INSTALLATION AT THE DOWNSTREAM END WITH THE OUTLET ALREADY CONSTRUCTED TO ALLOW A ROUTE FOR THE WATER TO ESCAPE. TEMPORARY DIVERSION MEASURES MAY BE REQUIRED FOR HIGH FLOWS DUE TO THE RESTRICTED NATURE OF THE OUTLET PIPE.

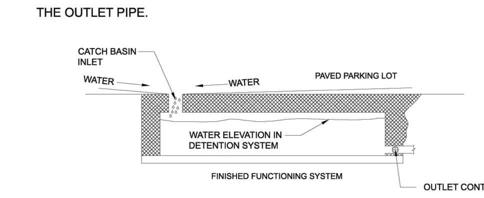

CMP DETENTION SYSTEM INSPECTION AND MAINTENANCE

UNDERGROUND STORMWATER DETENTION AND INFILTRATION SYSTEMS MUST BE INSPECTED AND MAINTAINED AT REGULAR INTERVALS FOR PURPOSES OF PERFORMANCE AND LONGEVITY.

INSPECTION

INSPECTION IS THE KEY TO EFFECTIVE MAINTENANCE OF CMP DETENTION SYSTEMS AND IS EASILY PERFORMED. CONTECH RECOMMENDS ONGOING, ANNUAL INSPECTIONS. SITES WITH HIGH TRASH LOAD OR SMALL OUTLET CONTROL ORIFICES MAY NEED MORE FREQUENT INSPECTIONS. THE RATE AT WHICH THE SYSTEM COLLECTS POLLUTANTS WILL DEPEND MORE ON SITE SPECIFIC ACTIVITIES RATHER THAN THE SIZE OR CONFIGURATION OF THE SYSTEM.

INSPECTIONS SHOULD BE PERFORMED MORE OFTEN IN EQUIPMENT WASHDOWN AREAS, IN CLIMATES WHERE SANDING AND/OR SALTING OPERATIONS TAKE PLACE, AND IN OTHER VARIOUS INSTANCES IN WHICH ONE WOULD EXPECT HIGHER ACCUMULATIONS OF SEDIMENT OR ABRASIVE/ CORROSIVE CONDITIONS. A RECORD OF EACH INSPECTION IS TO BE MAINTAINED FOR THE LIFE OF THE SYSTEM

MAINTENANCE

CMP DETENTION SYSTEMS SHOULD BE CLEANED WHEN AN INSPECTION REVEALS ACCUMULATED SEDIMENT OR TRASH IS CLOGGING THE DISCHARGE ORIFICE.

ACCUMULATED SEDIMENT AND TRASH CAN TYPICALLY BE EVACUATED THROUGH THE MANHOLE OVER THE OUTLET ORIFICE. IF MAINTENANCE IS NOT PERFORMED AS RECOMMENDED, SEDIMENT AND TRASH MAY ACCUMULATE IN FRONT OF THE OUTLET ORIFICE. MANHOLE COVERS SHOULD BE SECURELY SEATED FOLLOWING CLEANING ACTIVITIES. CONTECH SUGGESTS THAT ALL SYSTEMS BE DESIGNED WITH AN ACCESS/INSPECTION MANHOLE SITUATED AT OR NEAR THE INLET AND THE OUTLET ORIFICE. SHOULD IT BE NECESSARY TO GET INSIDE THE SYSTEM TO PERFORM MAINTENANCE ACTIVITIES, ALL APPROPRIATE PRECAUTIONS REGARDING CONFINED SPACE ENTRY AND OSHA REGULATIONS SHOULD BE FOLLOWED.

ANNUAL INSPECTIONS ARE BEST PRACTICE FOR ALL UNDERGROUND SYSTEMS. DURING THIS INSPECTION, IF EVIDENCE OF SALTING/DE-ICING AGENTS IS OBSERVED WITHIN THE SYSTEM, IT IS BEST PRACTICE FOR THE SYSTEM TO BE RINSED, INCLUDING ABOVE THE SPRING LINE SOON AFTER THE SPRING THAW AS PART OF THE MAINTENANCE PROGRAM FOR THE SYSTEM.

MAINTAINING AN UNDERGROUND DETENTION OR INFILTRATION SYSTEM IS EASIEST WHEN THERE IS NO FLOW ENTERING THE SYSTEM. FOR THIS REASON, IT IS A GOOD IDEA TO SCHEDULE THE CLEANOUT DURING DRY WEATHER.

THE FOREGOING INSPECTION AND MAINTENANCE EFFORTS HELP ENSURE UNDERGROUND PIPE SYSTEMS USED FOR STORMWATER STORAGE CONTINUE TO FUNCTION AS INTENDED BY IDENTIFYING RECOMMENDED REGULAR INSPECTION AND MAINTENANCE PRACTICES. INSPECTION AND MAINTENANCE RELATED TO THE STRUCTURAL INTEGRITY OF THE PIPE OR THE SOUNDNESS OF PIPE JOINT CONNECTIONS IS BEYOND THE SCOPE OF THIS GUIDE.

C:\EXPORTS\TEMPLATES\CMP_V10.DWG 10/18/2019 10:02 AM
CONTECH ENGINEERED SOLUTIONS LLC www.ContechES.com 9025 Centre Pointe Dr., Suite 400, West Chester, OH 45069 800-338-1122 513-645-7000 513-645-7993 FAX
CONTECH CMP DETENTION SYSTEMS CONTECH DYODS DRAWING
DYO622826 Bedford County Sheriff's Office 60" Rev Bedford, VA DETENTION SYSTEM
PROJECT No.: 74728 SEQ. No.: 622826 DATE: 4/2/2026 DESIGNED: DYO DRAWN: DYO CHECKED: DYO APPROVED: DYO SHEET NO.: 1

SPECTRUM DESIGN
architects | engineers

Plaza Suite 1
10 Church Avenue, SE
Roanoke, VA 24011
540.342.6001
spectrumpc.com

BEDFORD COUNTY SHERIFF'S OFFICE EXPANSION

SPECTRUM DESIGN PROJECT NO.: **24112**

COMMONWEALTH OF VIRGINIA
MICHAEL A. RAKES
Lic. No. 28199
05.04.2026
PROFESSIONAL ENGINEER

PROJ. MGR.:	CHECKED BY:	DRAWN BY:
JM	**MAR**	**GAG**

SHEET ISSUE DATE:
05.04.2026

PROJECT PHASE:
BID DOCUMENTS

SHEET REVISIONS:

KEY PLAN:

SHEET NAME:
STORM SEWER DETAILS

SHEET NUMBER:
C302

J:\24112\2.2 Civil\dwg\24112 Pipe Networks.dwg, Plotted By: ggrisso, Plotted: May 04, 2026 - 8:23am

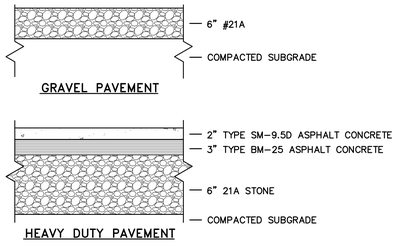

1 C102 C501 PAVEMENT SECTIONS
NO SCALE

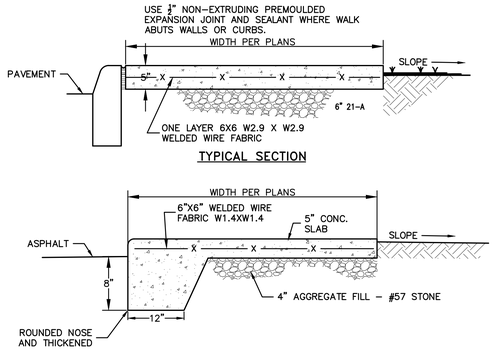

2 C102 C501 SIDEWALK DETAILS
NOT TO SCALE

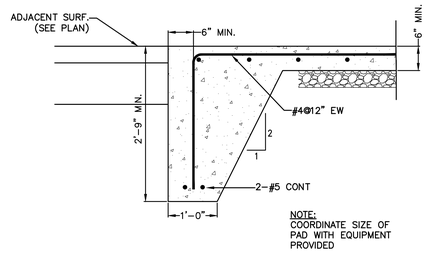

3 C102 C501 TYPICAL EQUIPMENT PAD
NO SCALE APPLICABLE ONLY WHERE NOT SPECIFIED ELSEWHERE

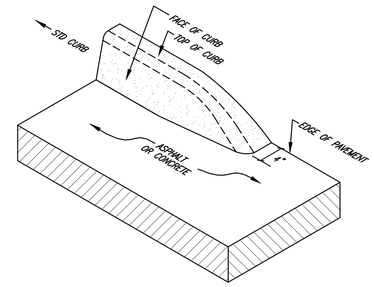

ISOMETRIC VIEW

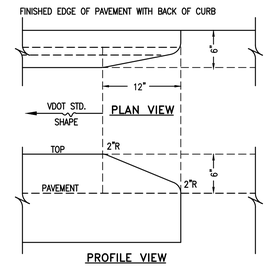

4 C102 C501 WIPE DOWN CURB
NO SCALE

NOTES:
1. VDOT CG-2 OR CG-6 (CURB PORTION).
2. SEE PAVEMENT DETAIL FOR TYPE OF BEDDING.

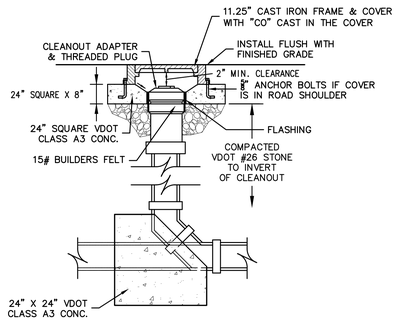

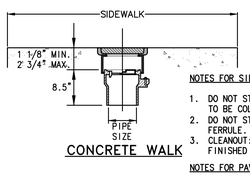

NOTES FOR SIDEWALK APPLICATIONS:

1. DO NOT STRIKE SHAPE OF COLLAR WITHIN CONC. WALK, ALLOW WALK TO BE COLLAR.
2. DO NOT STRIKE WALK JOINT THRU OR WITHIN 5" OF CLEANOUT FERRULE.
3. CLEANOUT: CAST IRON WITH DUCTILE IRON TOP, MOUNT FLUSH WITH FINISHED GRADE.

NOTES FOR PAVEMENT & GRASS APPLICATIONS:

1. FOR INSTALLATION WITHIN EXISTING PAVEMENT, PATCH SHALL MATCH EXISTING PAVEMENT SECTION UNLESS PRIME AND SEAL THEN USE SM-9.5A PATCH (3" MIN.)
2. PVC CLEANOUT WITH 11.25" TRAFFIC BEARING CLEANOUT FRAME AND COVER.

6 C102 C501 CLEANOUT DETAIL
NO SCALE

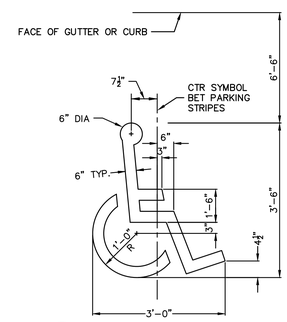

8 C104 C501 HANDICAPPED SYMBOL
NO SCALE

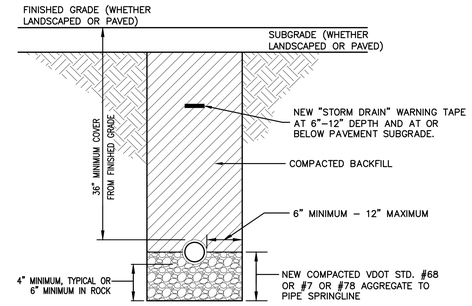

5 C102 C501 NEW STORM LINE TRENCH SECTION
NO SCALE
UNLESS DEFINED ELSEWHERE BY SPECS (BOUND OR ON PLAN SHEETS), BACKFILL AND SELECT BACKFILL SHALL BE AS APPROVED BY THE GEOTECHNICAL ENGINEER.

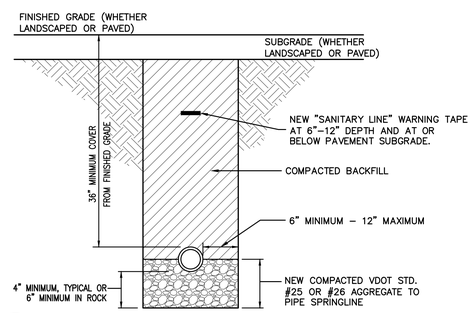

11 C102 C501 NEW SANITARY LINE TRENCH SECTION
NO SCALE
UNLESS DEFINED ELSEWHERE BY SPECS (BOUND OR ON PLAN SHEETS), BACKFILL SHALL BE AS APPROVED BY THE GEOTECHNICAL ENGINEER.

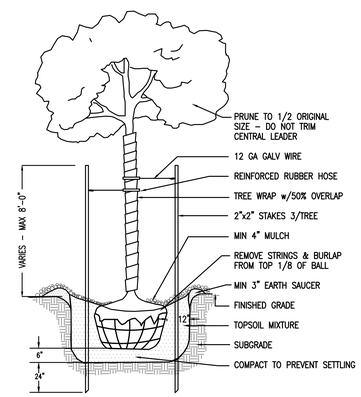

12 C102 C501 TREE PLANTING
NO SCALE

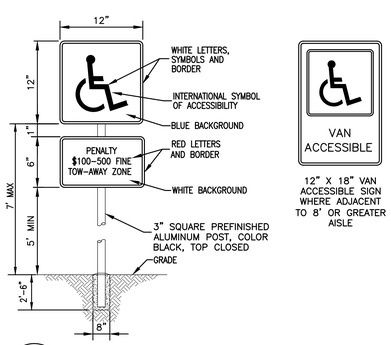

7 C104 C501 HANDICAPPED PARKING SIGN
NO SCALE

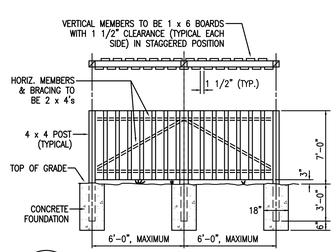

9 C102 C501 WOOD FENCE DETAIL
NO SCALE
NOTES:
1. ALL WOOD FOR FENCE TO BE PRESERVATIVE TREATED LUMBER.
2. CORNER POSTS AND GATE POSTS SHALL BE 6"X6".
3. GATES: PROVIDE (3) 7" BOLT ON HEAVY DUTY SEALED BEARING (UCDOET) HINGES PER DOOR. PROVIDE LOCKING DEVICE AND CENTER STOP HARDWARE.

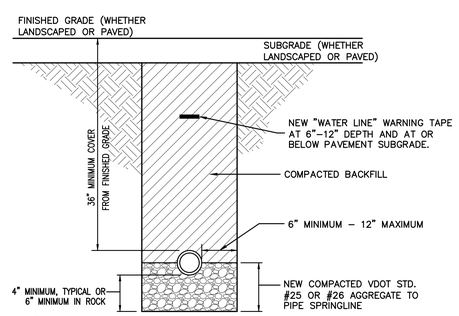

10 C102 C501 NEW WATER LINE TRENCH SECTION
NO SCALE
UNLESS DEFINED ELSEWHERE BY SPECS (BOUND OR ON PLAN SHEETS), BACKFILL SHALL BE AS APPROVED BY THE GEOTECHNICAL ENGINEER.

SPECTRUM DESIGN
architects | engineers

Plaza Suite 1
10 Church Avenue, SE
Roanoke, VA 24011

540.342.6001
spectrumpc.com

BEDFORD COUNTY SHERIFF'S OFFICE EXPANSION

SPECTRUM DESIGN PROJECT NO.: 24112

COMMONWEALTH OF VIRGINIA
MICHAEL A. RAKES
Lic. No. 28199
05.04.2026
PROFESSIONAL ENGINEER

PROJ. MGR.: JM
CHECKED BY: MAR
DRAWN BY: GAG

SHEET ISSUE DATE:
05.04.2026

PROJECT PHASE:
BID DOCUMENTS

SHEET REVISIONS:

KEY PLAN:

SHEET NAME:

DETAILS

SHEET NUMBER:

C501

GENERAL

1. APPLICABLE BUILDING CODES
   A. 2021 VIRGINIA CONSTRUCTION CODE (VCC)
   B. 2021 VIRGINIA EXISTING BUILDING CODE (VEBC)
   C. 2021 INTERNATIONAL BUILDING CODE (IBC) AS AMEMDED BY THE VCC.
   D. 2021 INTERNATION EXISTING BUILDING CODE (IEBC) AS AMENDED BY THE VEBC.
   E. ASCE 7-22 - MINIMUM DESIGN LOADS AND ASSOCIATED CRITERIA FOR BUILDINGS AND OTHER STRUCTURES

2. THE STRUCTURAL DRAWINGS SHALL BE USED IN CONJUNCTION WITH THE PROJECT SPECIFICATIONS AND OTHER DISCIPLINE DRAWINGS. THE CONTRACTOR SHALL COORDINATE AND VERIFY THE REQUIREMENTS OF OTHER DISCIPLINES AND TRADES AS TO THE LOCATION, SIZE, AND DIMENSIONS OF ALL ANCHORS, SLEEVES, OPENINGS, CHASES, HANGERS, AND ADDITIONAL ITEMS WITH THE STRUCTURAL WORK. ANY REFERENCE TO ARCHITECTURAL OR OTHER DISCIPLINE MATERIALS, SYSTEMS, OR CONCEPTS IS FOR GENERAL REFERENCE AND CLARITY ONLY.

3. THE CONTRACTOR SHALL PROVIDE TEMPORARY SHORING AND BRACING REQUIRED TO ERECT AND MAINTAIN THE STRUCTURE IN PROPER ALIGNMENT UNTIL PERMANENT SUPPORTS AND LATERAL BRACING ARE IN PLACE. THE DESIGN, ADEQUACY, AND SAFETY OF ERECTION BRACING, SHORING, TEMPORARY SUPPORTS, ETC. IS THE RESPONSIBILITY OF THE CONTRACTOR.

4. THE CONTRACTOR SHALL VERIFY ALL DIMENSIONS, ELEVATIONS, ETC. NECESSARY FOR THE PROPER CONSTRUCTION AND ALIGNMENT OF THE NEW PORTIONS OF THE STRUCTURE TO THE EXISTING STRUCTURE. THE CONTRACTOR SHALL VERIFY ALL MEASUREMENTS NECESSARY FOR PROPER FABRICATION AND ERECTION OF ALL STRUCTURAL MEMBERS.

5. THE STRUCTURAL FRAMING HAS BEEN CONFIGURED AND DESIGNED TO ACCOMMODATE THE MECHANICAL UNITS SPECIFIED IN THE CONTRACTOR DOCUMENTS. THE CONTRACTOR SHALL COORDINATE ALL DIMENSIONS RELATED TO THE MECHANICAL UNITS. IF MECHANICAL UNITS OTHER THAN THOSE SPECIFIED ARE APPROVED AND USED, THE CONTRACTOR SHALL CONTACT THE STRUCTURAL ENGINEER TO REVIEW ALL SUBSTITUTIONS AND MAKE CHANGES TO THE STRUCTURAL FRAMING AS REQUIRED. THE COSTS ASSOCIATED WITH THIS WORK; INCLUDING FEES FOR REVIEW AND REDESIGN, SHALL BE THE RESPONSIBILITY OF THE CONTRACTOR.

6. THIS PROJECT IS SUBJECT TO VCC CHAPTER 17 SPECIAL INSPECTIONS. REFER TO STATEMENT OF SPECIAL INSPECTIONS FOR REQUIREMENTS. OWNER SHALL RETAIN A QUALIFIED TESTING AND INSPECTION AGENCY. CONTRACTOR SHALL COORDINATE TESTING AND INSPECTIONS AND PROVIDE ACCESS TO THE WORK.

DESIGN CRITERIA

1. UNLESS NOTED OTHERWISE, ALL DESIGN LOADS ARE BASED ON THE FOLLOWING DATA IN ACCORDANCE WITH THE VUSBC.

2. RISK CATEGORY IV

3. FLOOR LIVE LOADS:

A.	SLABS-ON-GRADE	100 PSF
B.	OFFICES	50 PSF + 15 PSF (PARTITION)
C.	MECHANICAL	100 PSF
D.	STORAGE	100 PSF
E.	STAIRS	100 PSF
F.	CORRIDORS	100 PSF
G.	LOBBIES	100 PSF
H.	TOILETS	60 PSF
I.	AREAS NOT OTHERWISE SPECIFIED	100 PSF

4. NO FLOOR LIVE LOAD REDUCTIONS WERE APPLIED.

5. ROOF LIVE LOAD (UNREDUCIBLE), L_r = 20 PSF

6. SNOW LOADS

   GROUND SNOW LOAD, P_g = 61 PSF
   WINTER WIND PARAMETER, W_2 = 0.35
   EXPOSURE FACTOR, C_e = 1.0
   THERMAL FACTOR, C_t = 1.2
   FLAT ROOF SNOW LOAD, P_f = 0.7(1.0)(1.2)(61) = 51 PSF
   MINIMUM FLAT ROOF SNOW LOAD, P_m = 40 PSF. P_f CONTROLS.
   ROOF SLOPE FACTOR, C_s = 1.0

   SNOW LOADS HAVE BEEN ADJUSTED FOR PARTIAL LOADING, UNBALANCED CONDITIONS AS REQUIRED BY ASCE 7-22.
   DRIFT LOADS HAVE BEEN APPLIED AS REQUIRED BY ASCE 7-22.

7. WIND LOADS

   ULTIMATE DESIGN WIND SPEED, V_{ult} = 121 MPH
   ALLOWABLE STRESS DESIGN WIND SPEED, V_{asd} = 0.775(121) = 94 MPH
   EXPOSURE CATEGORY B
   INTERNAL PRESSURE COEFFICIENT, G_{cpi} = +/- 0.18

   THE DESIGN WIND PRESSURE FOR EXTERIOR COMPONENTS AND CLADDING SHALL BE DETERMINED IN ACCORDANCE WITH ASCE 7-22.

8. TORNADO LOADS

   EFFECTIVE PLAN AREA, A_e = 14,300 SF
   TORNADO WIND SPEED, V_T = 58 MPH < 60 MPH. TORNADO LOADS NOT REQUIRED.

9. SEISMIC LOADS

   SEISMIC IMPORTANCE FACTOR, I_e = 1.50
   MAPPED SPECTRAL RESPONSE ACCELERATIONS
   S_S = 0.19
   S_1 = 0.064
   SITE CLASS D
   SPECTRAL REPONSE COEFFICIENTS
   S_{DS} = 0.16
   S_{D1} = 0.091
   SEISMIC DESIGN CATEGORY C
   SEISMIC-FORCE RESISTING SYSTEMS:
   INTERMEDIATE REINFORCED MASONRY SHEAR WALLS R = 3.5
   SEISMIC RESPONSE COEFFICIENT, C_s = 0.069
   ANALYSIS PROCEDURE: EQUIVALENT LATERAL FORCE

10. RAIN LOADS

    15-MINUTE PRECIPITATION INTENSITY = 6.20 INCHES PER HOUR

FOUNDATIONS AND BUILDING EARTHWORK

1. ALL BUILDING PAD EARTHWORK AND FOUNDATION CONSTRUCTION SHALL CONFORM TO THE FOLLOWING:

   A. DIVISION 31 SPECIFICATIONS
   B. "GEOTECHNICAL ENGINEERING REPORT - BEDFORD COUNTY DEPARTMENT OF SOCIAL SERVICES & SHERIFF'S OFFICE" PREPARED BY HURT & PROFFITT, INC. AND DATED 04/16/2026.

2. MINIMUM ALLOWABLE SOIL BEARING PRESSURE SHALL BE 2000 PSF.

3. THE OWNER SHALL RETAIN A TESTING AGENCY STAFFED WITH A QUALIFIED GEOTECHNICAL ENGINEER LICENSED IN THE COMMONWEALTH OF VIRGINIA TO INSPECT AND APPROVE THE SUBGRADE INCLUDING FILL AND BACKFILL MATERIALS AND OPERATIONS.

4. ALL FILL AND BACKFILL MATERIAL SHALL BE SELECTED IN ACCORDANCE WITH THE GEOTECHNICAL REPORT AND APPROVED BY THE GEOTECHNICAL ENGINEER. ALL FILL AND BACKFILL MATERIAL SHALL BE PLACED IN LOOSE LIFTS NOT EXCEEDING 8 INCHES IN THICKNESS AND COMPACTED TO A MINIMUM OF 98% OF THE MATERIALS MAXIMUM DRY DENSITY AS DETERMINED BY STANDARD PROCTOR (ASTM D-698) AND WITH A MOISTURE CONTENT RANGE OF +2% TO -3% OF THE SOIL'S OPTIMUM MOISTURE CONTENT.

5. ALL PIERS AND FOOTINGS ARE LOCATED ON COLUMN CENTERLINES OR GRID LINES UNLESS NOTED OTHERWISE.

6. FOUNDATION WALLS AND PIERS HAVING EARTH PLACED ON EACH SIDE SHALL HAVE BOTH SIDES BACKFILLED SIMULTANEOUSLY. NO UNBALANCED FILL OR BACKFILL SHALL BE PLACED AGAINST BASEMENT WALLS UNLESS THE WALLS ARE BRACED EITHER BY TEMPORARY BRACING OR BY PERMANENT FLOOR CONSTRUCTION INCLUDING BASEMENT SLABS-ON-GRADE WHERE APPLICABLE.

7. NO FOUNDATION CONCRETE SHALL BE INSTALLED UNTIL ALL FOUNDATION WORK HAS BEEN COORDINATED WITH UNDERGROUND UTILITIES. FOOTINGS SHALL BE LOWERED WHERE REQUIRED TO AVOID UTILITIES. PROVIDE SLEEVES THROUGH FOUNDATION WALLS THAT ALLOW A MINIMUM OF 1" CLEAR AROUND THE PIPE OR CONDUIT.

ORIGINAL SIZE : ARCH E1 (30X42) | 5/4/2026 12:14:06 PM
C:\Revit Saves\24112 Struct Sheriff R26 CENTRAL_hrobinsonZ8PXQ.rvt

CAST-IN-PLACE CONCRETE

1. ALL CAST-IN-PLACE CONCRETE CONSTRUCTION SHALL CONFORM TO THE FOLLOWING:

   A. ACI 318-19 "BUILDING CODE REQUIREMENTS FOR STRUCTURAL CONCRETE."
   B. ACI 301 "SPECIFICATIONS FOR STRUCTURAL CONCRETE."
   C. CRSI "MANUAL OF STANDARD PRACTICE"
   D. DIVISION 3 SPECIFICATIONS

2. MATERIALS

   A. REINFORCING STEEL: ASTM A615, GRADE 60
   B. WELDED WIRE FABRIC (WWF): ASTM A185, Fy = 65 KSI

3. PROVIDE THE FOLLOWING CONCRETE MIXES FOR THE STRUCTURES INDICATED WITH THE 28-DAY COMPRESSIVE STRENGTH (f'c) AND ENTRAINED AREA SPECIFIED. ALL MIXES SHALL BE NORMAL WEIGHT.

USE	f'c	ENTRAINED AIR
FOOTINGS	4000 PSI	
INTERIOR WALLS AND PIERS	4000 PSI	
EXTERIOR WALLS AND PIERS	4500 PSI	6% +/- 1.5%
INTERIOR SLABS-ON-GRADE	4000 PSI	
STAIRS	4000 PSI	
SLABS ON STEEL DECK	4000 PSI	

4. DO NOT PROVIDE AIR ENTRAINING ADMIXTURES IN MIXES FOR INTERIOR SLABS-ON-GRADE OR SLABS ON STEEL DECK.

5. REFER TO CIVIL FOR EXTERIOR CONCRETE PAVEMENT.

6. PROVIDE WELDED WIRE FABRIC IN SHEETS, ROLLS WILL NOT BE ACCEPTED.

7. FIELD BENDING OF CONCRETE REINFORCING STEEL IS NOT PERMITTED UNLESS APPROVED BY THE STRUCTURAL ENGINEER.

8. UNLESS NOTED OTHERWISE, CLEAR CONCRETE COVER OVER REINFORCING SHALL BE:

UNFORMED SURFACES CAST AGAINST EARTH:	3"
EXTERIOR FORMED SURFACES:	2"
INTERIOR FORMED SURFACES:	1-1/2"

9. CONTINUOUS REINFORCING IN WALLS AND SLABS MAY BE SPLICED, AS REQUIRED, PROVIDING BARS ARE OF THE LONGEST PRACTICAL LENGTH AND ALL SPLICES ARE SHOWN ON THE SHOP DRAWINGS. WHEREVER POSSIBLE, SPLICES SHALL BE STAGGERED. UNLESS NOTED OTHERWISE, PROVIDE CONTACT TENSION LAP SPLICES PER THE FOLLOWING SCHEDULE.

BAR SIZE	LAP SPLICE (IN)	
	TOP	OTHER
#3	24	19
#4	32	25
#5	40	31
#6	48	37
#7	70	54
#8	80	62
#9	91	70

10. UNLESS OTHERWISE NOTED OR SHOWN, PROVIDE DOWELS WITH ACI STANDARD 90 DEG HOOKS IN FOOTINGS TO MATCH REINFORCEMENT IN WALL, PIERS, AND COLUMNS. PROVIDE LAP SPLICES WITH VERTICAL AS SCHEDULED.

11. SEE ARCHITECTURAL, PLUMBING, MECHANICAL, AND ELECTRICAL DRAWINGS FOR LOCATIONS OF PENETRATIONS AND EMBEDDED ITEMS. PROVIDE SLEEVES TO ALLOW DIFFERENTIAL SETTLEMENT BETWEEN THE FOUNDATION WALL AND THE PENETRATION CONDUIT. COORDINATE PENETRATIONS AND EMBEDDED ITEMS WITH REINFORCING. SLIGHTLY SPREAD REINFORCEMENT WHERE POSSIBLE. REFER TO TYPICAL DETAILS WHERE REINFORCING MUST BE CUT.

12. REFER TO AND COORDINATE WITH OTHER DISCIPLINE DRAWINGS FOR ITEMS TO BE INCORPORATED IN THE CONCRETE WORK INCLUDING, BUT NOT LIMITED TO FLOOR DRAINS, CONDUIT, PIPE SLEEVES, FLOOR OUTLETS, ANCHOR BOLTS, ETC.

13. BASE PLATES, ANCHOR BOLTS, SUPPORT ANGLES AND OTHER STEEL EXPOSED TO EARTH OR GRANULAR FILL SHALL BE COVERED WITH A MINIMUM OF 3 INCHES OF CONCRETE.

14. UNLESS OTHERWISE SHOWN ON THE ARCHITECTURAL DRAWINGS, PROVIDE 3/4" CHAMFERS AT ALL CONCRETE EDGES THAT ARE EXPOSED TO VIEW IN THE FINISHED CONDITION.

15. SLOPE SLABS-ON-GRADE AND SLABS ON STEEL DECK AS INDICATED ON THE STRUCTURAL AND / OR THE ARCHITECTURAL DRAWINGS. COORDINATE SLAB-ON-GRADE DEPRESSIONS WITH FINISH FLOOR MATERIALS, ENTRANCE MATS, AND OTHER ITEMS. REFER TO TYPICAL DETAILS.

STRUCTURAL UNIT MASONRY

1. STRUCTURAL UNIT MASONRY SHALL BE DEFINED AS ALL THE MASONRY SHOWN AND DETAILED ON THE STRUCTURAL DRAWINGS. REFER TO AND COORDINATE WITH THE ARCHITECTURAL DRAWINGS FOR NON-LOAD BEARING MASONRY AND MASONRY VENEER. CONTRACTOR SHALL COORDINATE THE STRUCTURAL MASONRY WITH ARCHITECTURAL INCLUDING; BUT NOT LIMITED TO, VENEER TIES, FLASHING, WATER AND DAMP PROOFING, INSULATION, AND WEEPS.

2. ALL STRUCTURAL UNIT MASONRY CONSTRUCTION SHALL CONFORM TO THE FOLLOWING:

   A. TMS 602-2016 "SPECIFICATION FOR MASONRY STRUCTURES."
   B. TMS 402-2016 "BUILDING CODE REQUIREMENTS FOR MASONRY STRUCTURES."
   C. DIVISION 4 SPECIFICATIONS

3. THE DESIGN COMPRESSIVE STRENGTH OF CONCRETE MASONRY UNIT (CMU) CONSTRUCTION, (f'm) SHALL BE 2,000 PSI

4. MATERIALS:

A.	CONCRETE MASONRY UNIT (CMU):	ASTM C90, LIGHTWEIGHT, 2000 PSI
B.	MORTAR BELOW GRADE:	ASTM C270, TYPE M
C.	MORTAR ABOVE GRADE:	ASTM C270 TYPE S
D.	GROUT:	ASTM C476, f'g = 2000 PSI
E.	REINFORCING STEEL:	ASTM A615, GRADE 60

5. THE CONTRACTOR SHALL COORDINATE THE LOCATION OF ALL OPENINGS REQUIRED BY OTHER TRADES. OPENINGS OVER 8" WIDE SHALL BE BUILT INTO THE WALL AND NOT CUT IN LATER. PROVIDE LINTELS OVER OPENINGS AS SCHEDULED. IF NONE ARE SCHEDULED, PROVIDE L3-1/2x3-1/2x5/16 ANGLE FOR EACH 4 NOMINAL INCHES OF MASONRY. PROVIDE 4" MINIMUM BEARING AT EACH END. ANGLES SHALL BE GALVANIZED IN EXTERIOR WALLS.

6. PROVIDE GALVANIZED HORIZONTAL LADDER TYPE JOINT REINFORCEMENT WITH (2) 9 GA. (W1.7) RODS AND 9 GA. CROSS RODS, HOT-DIPPED GALVANIZED AFTER FABRICATION PER ASTM A153 - CLASS B-2.PROVIDE JOINT REINFORCEMENT AT 16" O.C. AND IN THE JOINTS IMMEDIATELY ABOVE AND BELOW ALL OPENINGS. EXTEND JOINT REINFORCEMENT A MINIMUM OF 2'-0" BEYOND THE JAMB ON EACH SIDE OF THE OPENING. LAP JOINT REINFORCING 8" MINIMUM. PROVIDE PREFABRICATED CORNERS AND TEES WITH A MINIMUM LENGTH OF 32". JOINT REINFORCING SHALL STOP AT CONTROL JOINTS.

7. UNLESS NOTED OTHERWISE, PROVIDE TYPICAL VERTICAL REINFORCING IN CMU WALLS IN ACCORDANCE WITH THE TYPICAL DETAILS.

8. UNLESS NOTED OTHERWISE, ALL VERTICAL REINFORCING SHALL BE PLACED AT THE CENTER OF THE WALL WIDTH. SECURE REINFORCING IN PLACE PRIOR TO PLACING GROUT.

9. IN ADDITION TO THE TYPICAL VERTICAL REINFORCING AND REINFORCING INDICATED ON THE DRAWINGS, PROVIDE MATCHING VERTICAL REINFORCING AT THE LOCATIONS INDICATED IN THE TYPICAL DETAILS.

10. VERTICAL WALL REINFORCING AND BOND BEAM REINFORCING MAY BE SPLICED. REINFORCING FOR LINTELS SHALL NOT BE SPLICED. SPLICED REINFORCING SHALL BE LAPPED PER THE FOLLOWING SCHEDULE, UNLESS NOTED OTHERWISE.

BAR SIZE	LAP SPLICE (IN)
#4	24
#5	30
#6	36

11. FULLY GROUT ALL FOUNDATION WALLS AND ANY CMU LOCATED BELOW FINISH GRADE OR FINISH SLAB-ON-GRADE ELEVATION, WHICHEVER IS HIGHER. WHERE FINISHED GRADE IS ABOVE THE INTERIOR FLOOR SLAB-ON-GRADE, CMU SHALL BE FULLY GROUTED FROM THE FOOTING TO EIGHT INCHES ABOVE FINISH GRADE.

12. PROVIDE COARSE OR FINE AGGREGATE GROUT FOR GROUTING CMU LINTELS, BOND BEAMS, CELLS WITH VERTICAL REINFORCING, WHERE REQUIRED FOR INSTALLATION OF ANCHORS AND EMBEDDED ITEMS, AND OTHER LOCATIONS INDICATED ON THE DRAWINGS. DO NOT USE MORTAR AS GROUT. PLACE AND CONSOLIDATE GROUT IN STRICT ACCORDANCE WITH TMS 602. GROUT POURS SHALL BE STOPPED 1-1/2 INCHES BELOW THE TOP OF A COURSE TO FORM A KEY AT THE JOINT. PROVIDE FINE GROUT FOR GROUTING COLLAR JOINTS AND WHERE INDICATED ON THE DRAWINGS.

13. UNLESS OTHERWISE NOTED, PROVIDE (2)#4 CONTINUOUS REINFORCING INCLUDING CORNER AND INTERSECTION BARS IN BOND BEAMS.

14. UNLESS NOTED OTHERWISE, BOND BEAMS SHALL BE CONTINUOUS AROUND THE PERIMETER OF THE BUILDING AT THE ELEVATIONS INDICATED AT THE FLOOR AND ROOF PLANS. BOND BEAM REINFORCING SHALL BE CONTINUOUS THROUGH CONTROL JOINTS. RAKE OUT OR CUT IN A VERTICAL JOINT MATCHING THE CONTROL JOINT.

STRUCTURAL STEEL

1. ALL THE DESIGN, DETAILING, FABRICATION, AND ERECTION OF ALL STRUCTURAL STEEL SHALL CONFORM TO THE FOLLOWING:

   A. AISC 360-16 "SPECIFICATION FOR STRUCTURAL STEEL BUILDINGS."
   B. AWS D1.1 "STRUCTURAL WELDING CODE - STEEL."
   C. 051200 - STRUCTURAL STEEL

2. MATERIALS

   A. W SHAPES: ASTM A992, Fy = 50 KSI
   B. ANGLES AND CHANNELS: ASTM A36, Fy = 36 KSI
   C. RECTANGULAR AND SQUARE HSS: ASTM A500 GRADE C, Fy = 46 KSI
   D. PLATES AND BARS: ASTM A36, Fy = 36 KSI
   E. BOLTS: ASTM F3125, GRADE A325, TYPE 1
   F. ANCHOR RODS: ASTM F1554, GRADE 36, Fy = 36 KSI
   G. RODS: ASTM A36, Fy = 36 KSI
   H. WELDED HEADED STUDS: ASTM A108, TYPE A, AWS D1.1

3. THE CENTERLINE OF ALL COLUMNS AND BEAMS SHALL BE LOCATED ON COLUMN LINES UNLESS OTHERWISE SHOWN.

4. UNLESS OTHERWISE NOTED OR SHOWN, CONNECTIONS SHALL BE "SIMPLE CONNECTIONS" AS DEFINED BY AISC.

5. ALL BEAM-TO-COLUMN CONNECTIONS INDICATED THUS: ► SHALL BE MOMENT CONNECTIONS. REFER TO DETAILS.

6. STEEL NOTED AS "GALV." SHALL BE GALVANIZED PER ASTM A123 AFTER FABRICATION. ASSOCIATED BOLTS, THREADED RODS, NUTS, AND WASHERS SHALL BE GALVANIZED PER ASTM A153.

7. FABRICATE ALL BEAMS WITH MILL CAMBERS UP.

8. DO NOT ALTER FABRICATED STEEL MEMBERS AND ASSEMBLIES IN THE FIELD WITHOUT APPROVAL OF THE ENGINEER.

9. NO CHANGE IN SIZE OR POSITION OF ANY STRUCTURAL ELEMENT NOR SPLICES, HOLES, SLOTS, CUTS, ETC. SHALL BE MADE UNLESS DETAILED AND NOTED AS A PROPOSED CHANGE ON THE SHOP DRAWINGS AND REVIEWED AND APPROVED BY THE STRUCTURAL ENGINEER.

10. SHEAR CONNECTIONS FOR BEAMS SHALL BE DESIGNED FOR REACTIONS INDICATED ON THE FRAMING PLANS. WHERE NONE ARE INDICATED FOR SIMPLY SUPPORTED BEAMS SHEAR CONNECTIONS SHALL BE DESIGNED FOR AN END REACTION EQUAL TO 1/2 OF THE TOTAL UNIFORM LOAD CAPACITY TABULATED IN THE "MAXIMUM UNIFORM LOAD" TABLES, ALLOWABLE STRENGTH DESIGN (ASD) OF THE AISC STEEL CONSTRUCTION MANUAL. MINIMUM REACTION SHALL BE 10 KIPS.

11. ALL WELDING SHALL BE IN STRICT ACCORDANCE WITH AWS D1.1. ELECTRODES SHALL BE E70XX. PROVIDE 3/16" CONTINUOUS FILLET WELDS UNLESS OTHERWISE NOTED.

12. WELDS INDICATED "CJP" SHALL BE COMPLETE JOINT PENETRATION GROOVE WELDS. WELDS INDICATED "PJP" SHALL BE PARTIAL JOINT PENETRATION GROOVE WELDS. PRODUCE COMPLETE JOINT PENETRATION GROOVE WELDS OR PARTIAL PENETRATION WELDS WITH THE EFFECTIVE THROAT DIMENSION INDICATED WHICH CONFORM TO ALL AWS D1.1 QUALIFIED WELD REQUIREMENTS AND WHICH ARE APPLICABLE TO THE SPECIFIC CONDITIONS SHOWN.

13. UNLESS NOTED OTHERWISE, BEARING-TYPE CONNECTIONS WITH A325 TYPE X BOLTS SHALL BE USED FOR ALL CONNECTIONS. OVERSIZED AND LONG-SLOTTED HOLES ARE NOT PERMITTED EXCEPT WHERE NOTED ON THE DRAWINGS.

14. BOLTS IN BEARING CONNECTIONS SHALL BE TIGHTENED TO A "SNUG TIGHT" CONDITION. "SNUG TIGHT" SHALL BE DEFINED AS THE TIGHTNESS THAT EXISTS WHEN ALL PLIES IN A JOINT ARE IN FIRM CONTACT AND THE BOLT IS TIGHTENED BY THE FULL EFFORT OF AN ERECTOR WITH A SPUD WRENCH.

15. TIGHTENING OF ALL BOLTS SUBJECT TO DIRECT OR PRYING TENSION OR BOLTS DESIGNATED AS SLIP-CRITICAL (SC) SHALL BE FULLY-TENSIONED AND CONFORM TO ONE OF THE FOLLOWING METHODS THROUGHOUT THE DURATION OF THE PROJECT, UNLESS OTHERWISE APPROVED BY THE STRUCTURAL ENGINEER.
    A. TURN-OF-NUT TIGHTENING
    B. CALIBRATED WRENCH TIGHTENING
    C. DIRECT TENSION INDICATING WASHERS

16. PROVIDE L3x3x1/4 ANGLE WELDED FRAMING AROUND OPENINGS THROUGH THE ROOF OR FLOOR TO SUPPORT STEEL DECK UNLESS OTHERWISE NOTED OR DETAILED ON THE DRAWINGS.

OPEN-WEB STEEL JOISTS

1. ALL STEEL JOISTS SHALL BE DESIGNED, FABRICATED, AND ERECTED IN ACCORDANCE WITH THE FOLLOWING:
   A. SJI 100-20 "STANDARD SPECIFICATIONS FOR K-SERIES, LH-SERIES, AND DLH-SERIES OPEN WEB STEEL JOISTS AND FOR JOIST GIRDERS.
   B. AWS D1.1 "STRUCTURAL WELDING CODE - STEEL."
   C. 052100 - STEEL JOISTS

2. OPEN-WEB STEEL JOISTS DESIGNATED WITH SPX SUPPORT NONUNIFORM DESIGN LOADS. REFER TO JOIST LOADING DIAGRAMS.

3. STEEL JOISTS USED IN ROOF FRAMING SHALL BE DESIGNED FOR A NET UPLIFTS INDICATED AND SHALL HAVE UPLIFT BRIDGING AS REQUIRED.

4. ALL JOISTS BRIDGING SHALL CONFORM TO SJI SPECIFICATIONS. TYPICAL HORIZONTAL AND DIAGONAL JOIST BRIDGING IS NOT INDICATED ON THE DRAWINGS EXCEPT WHERE REQUIRED FOR COORDINATION WITH OTHER DISCIPLINE DRAWINGS. THE ENDS OF ALL BRIDGING LINES SHALL BE ANCHORED TO WALL CONSTRUCTION USING STEEL CLIP ANGLES AND EXPANSION ANCHORS OR WELDED TO STEEL FRAMING. PROVIDE DIAGONAL (CROSS) BRIDGING IN ADDITION TO THAT REQUIRED BY THE SJI SPECIFICATIONS WHERE INDICATED.

5. STEEL JOIST SPACING SHALL NOT EXCEED SPACING INDICATED ON DRAWINGS AND THE PLACEMENT OF JOIST SHALL BE CAREFULLY COORDINATED WITH PARTITIONS AND WORK OF OTHER TRADES.

6. WHERE CONCENTRATED LOADS ARE SUPPORTED FROM JOISTS, REFER TO TYPICAL DETAILS

STEEL DECK

1. ALL STEEL DECK CONSTRUCTION SHALL CONFORM TO THE FOLLOWING:

   A. SDI NC-2017 "STANDARD FOR NONCOMPOSITE STEEL FLOOR DECK"
   B. SDI RD-2017 "STANDARD FOR STEEL ROOF DECK"
   C. SDI QA/QC-2017 "STANDARD FOR QUALITY CONTROL AND QUALITY ASSURANCE FOR INSTALLATION OF STEEL DECK"
   D. REFERENCED AISI SPECIFICATIONS.
   E. AWS D1.3 "STRUCTURAL WELDING CODE - SHEET STEEL."
   F. 053100 - STEEL DECK

2. PROVIDE DECK AND ACCESSORIES FORMED FROM SHEET STEEL CONFORMING TO AISI S100, SECTION A3 WITH THE MINIMUM YIELD STRESS (Fy) INDICATED.

3. UNLESS NOTED OTHERWISE, ALL STEEL DECK SHALL BE GALVANIZED PER ASTM 924 WITH A COATING CLASS OF G60.

4. STEEL ROOF DECK SHALL BE 1-1/2 INCH, TYPE B, Fy = 40 KSI. SEE PLAN FOR GAGE. DECK FASTENING TO SUPPORTS SHALL BE 36/5 PATTERN WITH 5/8" PUDDLE WELDS. SIDELAP FASTENING SHALL BE (2) #10 SELF-DRILLING SCREWS PER SPAN.

5. NONCOMPOSITE STEEL FORM DECK SHALL BE 1-1/2 INCH, 22 GAGE, Fy = 40 KSI. DECK FASTENING TO SUPPORTS SHALL BE 36/4 PATTERN WITH 5/8" PUDDLE WELDS. SIDELAP FASTENING SHALL BE (2) #10 SELF-DRILLING SCREWS PER SPAN.

6. FLOOR DECK IS DESIGNED BASED ON UNSHORED CONSTRUCTION, UNLESS NOTED OTHERWISE.

7. ALL STEEL DECK SHALL BE DETAILED FOR A MINIMUM TRIPLE SPAN CONDITION, UNLESS NOTED OTHERWISE.

8. DO NOT SUPPORT PERMANENT SUSPENDED LOADS FROM THE STEEL DECK.

POST INSTALLED ANCHORS

1. THE BASIS FOR THE DESIGN OF SCREW AND ADHESIVE ANCHORS ARE THE FOLLOWING PRODUCTS AS MANUFACTURED BY SIMPSON STRONG-TIE. OTHER MANUFACTURER'S PRODUCTS MAY BE SUBSTITUTED SUBJECT TO THE APPROVAL OF THE STRUCTURAL ENGINEER IF THEY HAVE AN ICC-ES APPROVAL AND THEIR PUBLISHED ALLOWABLE LOAD CAPACITY AND CORROSION RESISTANT FINISH IS EQUAL TO OR GREATER THAN THE ANCHOR SPECIFIED IN THE INSTALLED CONDITIONS.

2. INSTALL ALL ANCHORS IN STRICT ACCORDANCE WITH THE MANUFACTURER'S SPECIFICATIONS.

3. SCREW ANCHORS: SIMPSON STRONG-TIE TITEN HD WHERE INDICATED. REFER TO SECTIONS AND DETAILS FOR REQUIRED ANCHOR DIAMETER AND EMBEDMENT DEPTH.

4. ADHESIVE ANCHORS FOR REINFORCING BARS AND THREADED ROD: SIMPSON SET-3G. REFER TO SECTIONS AND DETAILS FOR REQUIRED ANCHOR DIAMETER AND EMBEDMENT DEPTH. UNLESS NOTED OTHERWISE, THREADED RODS, NUTS AND WASHERS SHALL BE HOT-DIP GALVANIZED TO ASTM A153. RODS SHALL BE THREADED FOR THEIR FULL LENGTH. INSTALL ANCHORS PER MANUFACTURER'S RECOMMENDATIONS.

ROUGH CARPENTRY (WOOD FRAMING)

1. ALL WOOD CONSTRUCTION SHALL CONFORM TO THE FOLLOWING:
   A. AF&PA NDS-2018.

2. UNLESS NOTED OTHERWISE, ALL JOISTS, POSTS, HEADERS, RAFTERS, AND BEAMS SHALL BE VISUALLY GRADED NO. 2 SOUTHERN YELLOW PINE.

3. UNLESS NOTED OTHERWISE, WALLS SHALL BE FRAMED PER SECTION 2308.5 OF IBC 2021 WITH VISUALLY GRADED NO. 2 SPRUCE-PINE-FIR.

4. PREFABRICATED WOOD TRUSSES SHALL BE DESIGNED BY OTHERS.

5. UNLESS NOTED OTHERWISE, CUTTING, NOTCHING, AND DRILLING OF FRAMING SHALL ONLY BE PERMITTED PER SECTIONS 2308.5.9 AND 2308.5.10 OF IBC 2021.

6. ALL BLOCKING AND BRIDGING MAY BE NO. 3 OR STUD GRADE SOUTHERN YELLOW PINE.

7. ALL FRAMING SHALL HAVE A MAXIMUM MOISTURE CONTENT OF 19% AT TIME OF INSTALLATION.

8. PROVIDE CROSS BRIDGING OR 2X BLOCKING FOR ALL WOOD JOISTS AND TRUSSES AND SOLID BLOCKING BETWEEN ALL JOISTS AT SUPPORTS.

9. UNLESS NOTED OTHERWISE ON THE DRAWINGS, FASTENING OF ALL WOOD MEMBERS SHALL BE PER THE FASTENING SCHEDULE LOCATED IN TABLE 2304.10.2 OF IBC 2021.

10. TIMBER CONNECTORS CALLED FOR ON THE DRAWINGS ARE MANUFACTURED BY THE SIMPSON STRONG-TIE COMPANY. CONNECTORS BY OTHER MANUFACTURERS MAY BE USED IF THEY HAVE ICC-ES APPROVAL AND THEIR LOAD CAPACITY IS EQUAL TO OR GREATER THAN THE CONNECTOR SPECIFIED. USE MANUFACTURER'S FURNISHED NAILS AND FASTENERS.

11. RATED PLYWOOD SHEATING SHALL CONFORM TO APA STANDARD PS1. ORIENTED STRAND BOARD (OSB MAY BE SUBSTITUTED FOR PLYWOOD AS LONG AS IT MEETS THE SAME APA STRUCTURAL WOOD PANEL RATING. SMOOTH COMMON NAILS SHALL BE USED ON ALL STRUCTURAL SHEATHING. PROVIDE THE FOLLOWING SHEATHING AND FASTENING, UNLESS NOTED OTHERWISE.
    A. FLOORS: 3/4" TONGUE-IN-GROOVE PLYWOOD FASTENED WITH 8D COMMON NAILS @ 6" OC ALONG EDGES AND AT 12" OC AT INTERMEDIATE FRAMING MEMBERS.
    B. ROOFS: 5/8" PLYWOOD OR OSB FASTENED WITH 8D COMMON NAILS @ 6" OC ALONG PANEL EDGES AND AT 12" OC AT INTERMEDIATE FRAMING MEMBERS.
    C. EXTERIOR WALLS: 7/16" PLYWOOD OR OSB WITH 8D COMMON NAILS @ 6" OC ALONG PANEL EDGES AND @ 12" OC TO INTERMEDIATE FRAMING MEMBERS. INSTALL BLOCKING BETWEEN STUDS AT HORIZONTAL PANEL EDGES.

12. PREFABRICATED WOOD I-JOIST MEMBERS SHALL BE TJI 360 TRUS JOIST BY WEYERHAUSER AND BE ERECTED IN ACCORDANCE WITH THE MANUFACTURER'S RECOMMENDATIONS. OTHER MANUFACTURER'S MAY BE SUBSTITUTED, PROVIDED JOISTS BY OTHER MANUFACTURER HAVE ICC-ES APPROVAL AND THEIR LOAD CAPACITY AND STIFFNESS ARE EQUALS TO OR GREATER THAN THOSE SPECIFIED.

13. LAMINATED VENEER LUMBER (LVL) MEMBER SHALL BE 2.0E, 2600 Fb MICROLLAM BY WEYERHAUSER AND BE ERECTED IN ACCORDANCE WITH THE MANUFACTURER'S RECOMMENDATIONS. ANOTHER MANUFACTURER MAY BE SUBSTITUTED PROVIDED BEAMS BY OTHER MANUFACTURER HAVE ICC-ES APPROVAL AND THEIR LOAD CAPACITY AND STIFFNESS ARE EQUAL TO OR GREATER THAN THOSE SPECIFIED.

14. SET ALL JOISTS WITH THE CROWN UP.

15. INSTALL PLYWOOD TO A MINIMUM TWO-SPAN CONTINUOUS CONDITION WITH LONGER FACTORY EDGE PERPENDICULAR TO THE FRAMING MEMBERS, WITH END JOINT STAGGERED, AND SHEET ENDS BEARING ON FRAMING MEMBERS.

16. UNLESS NOTED OTHERWISE, LOAD-BEARING HEADERS SHALL BE SUPPORTED AT EACH END WITH (2) JACK STUDS. INSTALL KING STUDS AT EACH END OF THE OPENING EQUAL TO HALF THE NUMBER OF STUDS INTERRUPTED BY THE OPENING. BUILD UP HEADERS AND SUPPORTS PER TABLE 2304.10.2 OF IBC 2021.

17. UNLESS NOTED OTHERWISE, AT BEAMS, PROVIDE BUILT-UP POSTS AT LEAST AS WIDE AS THE BEAM ABOVE. PROVIDE KING STUDS WITH SHIMS AS REQUIRED TIGHT TO THE SIDES OF THE BEAM OR SOLID BLOCK AT EACH.

18. ALL LUMBER IN CONTACT WITH MASONRY OR CONCRETE SHALL BE PRESERVATIVE TREATED.

COLD-FORMED METAL FRAMING

1. ALL COLD-FORMED METAL FRAMING SHALL CONFORM TO THE FOLLOWING:
   A. AISI "SPECIFICATION FOR THE DESIGN OF COLD-FORMED STEEL STRUCTURAL MEMBERS."
   B. STEEL STUD MANUFACTURERS ASSOCIATIONS (SSMA) STANDARDS AND SPECIFICATIONS.
   C. AWS D1.3 "STRUCTURAL WELDING CODE - SHEET STEEL."
   D. 054000 - COLD-FORMED METAL FRAMING

2. "CFMF" INDICATES COLD-FORMED METAL FRAMING AND INCLUDES; BUT IS NOT LIMITED TO, STUDS, TOP AND BOTTOM TRACKS, SLIDE CLIP CONNECTORS, BRIDGING, PRE-FABRICATED ENGINEERED TRUSSES, FASTENERS AND OTHER ITEMS REQUIRED TO PROVIDE A COMPLETE CFMF WALL ASSEMBLY. ONLY THE NOMINAL DEPTH IS INDICATED. STUD AND TRACK SECTION PROFILE; INCLUDING FLANGE WIDTH, STIFFENING LEGS, THICKNESS, SPACING AND FASTENING TO THE STRUCTURE SHALL BE DESIGNED BY THE MANUFACTURER UNDER THE DIRECT SUPERVISION OF A PROFESSIONAL ENGINEER LICENSED IN THE COMMONWEALTH OF VIRGINIA.

3. THE MAXIMUM STEEL STUD SPACING SHALL BE 16" O.C.

4. MEMBER DESIGNATIONS INDICATED ON THE DRAWINGS ARE SSMA (STEEL STUD MANUFACTURERS ASSOCIATION) STANDARD DESIGNATIONS.

5. THE MINIMUM THICKNESS OF STEEL STUDS BACKING UP BRICK VENEER SHALL BE 18 GA. AND THEIR DEFLECTION SHALL BE LIMITED TO L/600 OR CURRENT BIA RECOMMENDATION, WHICHEVER IS MORE RESTRICTIVE.

6. UNLESS NOTED OTHERWISE, ALL 14 AND 16 GAGE (68 AND 54 MIL) MATERIAL SHALL HAVE A MINIMUM YIELD STRENGTH OF 50 KSI AND ALL 18 AND 20 GAGE (43 AND 33 MIL) MATERIAL SHALL HAVE A MINIMUM YIELD STRENGTH OF 33 KSI.

7. AXIALLY LOADED STUDS SHALL BE INSTALLED IN A MANNER THAT WILL ENSURE THAT THEIR ENDS BEAR SOLIDLY ON BASE TRACK WEBS AT THE FLOOR. TOP TRACKS SHALL BEAR SOLIDLY ON THE TOP OF THE STUD.

8. PROVIDE WEAK-AXIS HORIZONTAL BRACING @ 48" MAXIMUM VERTICAL SPACING. HORIZONTAL BRACING MUST BE INSTALLED IMMEDIATELY AFTER THE STUDS ARE ERECTED.

9. FASTENING OF COMPONENTS SHALL BE WITH SELF-DRILLING SCREWS.

10. WELDING SHALL BE ALLOWED ONLY WHERE INDICATED ON THE SHOP DRAWINGS AND SHALL CONFORM TO AWS D1.3. ALL WELDS SHALL BE TOUCHED-UP WITH A ZINC RICH PAINT OR PAINT MATCHING THAT USED BY THE CFMF MANUFACTURER.

11. CUTTING OF STEEL FRAMING MEMBERS MAY BE DONE WITH A SAW OR CUTTING SHEARS. TORCH CUTTING OF LOAD BEARING MEMBERS IS NOT PERMITTED.

12. PROVIDE ALL TRACKS, BLOCKING, LINTELS, CLIP ANGLES, SLIDE CLIPS, STIFFENERS, FASTENERS AND ACCESSORIES AS INDICATED OR AS RECOMMENDED BY THE MATERIAL MANUFACTURER TO PROVIDE A COMPLETE FRAMING SYSTEM.

13. REFER TO ARCHITECTURAL DRAWINGS FOR INTERIOR PARTITIONS AND OTHER LIGHT GAUGE METAL FRAMING WORK.

STRUCTURAL ABBREVATIONS

AR	ANCHOR ROD
BRG	BEARING
B/, BOT	BOTTOM
B.O.	BOTTOM OF
BTWN	BETWEEN
CLR	CLEAR
CL	CENTER LINE
COL	COLUMN
CMU	CONCRETE MASONRY UNIT
CONT	CONTINUOUS
CJ	CONSTRUCTION OR CONTROL JOINT
DIA	DIAMETER
ELEV	ELEVATION
EMB	EMBEDMENT
EXIST, (E)	EXISTING
EW	EACH WAY
EF	EACH FACE
EJ	EXPANSION JOINT
FTG	FOOTING
FNDN	FOUNDATION
F.O.	FACE OF
FS	FOOTING STEP
GA	GAGE
GALV	GALVANIZED
HP	HIGH POINT
ID	INSIDE DIAMETER
I.F.O.	INSIDE FACE OF
K	KIPS (KILOPOUNDS)
LLH	LONG LEG HORIZONTAL
LLV	LONG LEG VERTICAL
LP	LOW POINT
MAX	MAXIMUM
MIN	MINIMUM
MISC	MISCELLANEOUS
NS	NEAR SIDE
NIC	NOT IN CONTRACT
NTS	NOT TO SCALE
NO, #	NUMBER
O.C.	ON CENTER
OD	OUTSIDE DIAMETER
O.F.O.	OUTSIDE FACE OF
OPNG	OPENING
OPP	OPPOSITE
PL	PLATE
PT	PRESERVATIVE TREATED
R	RADIUS
REINF	REINFORCEMENT
REQ'D	REQUIRED
SPEC	SPECIFICATION
SIM	SIMILAR
T/	TOP
T.O.	TOP OF
T.O.S.	TOP OF STEEL
TYP	TYPICAL
UNO	UNLESS NOTED OTHERWISE
VIF	VERIFY IN FIELD
WWF	WELDED WIRE FABRIC
W/	WITH
WP	WORK POINT

LEGENDS

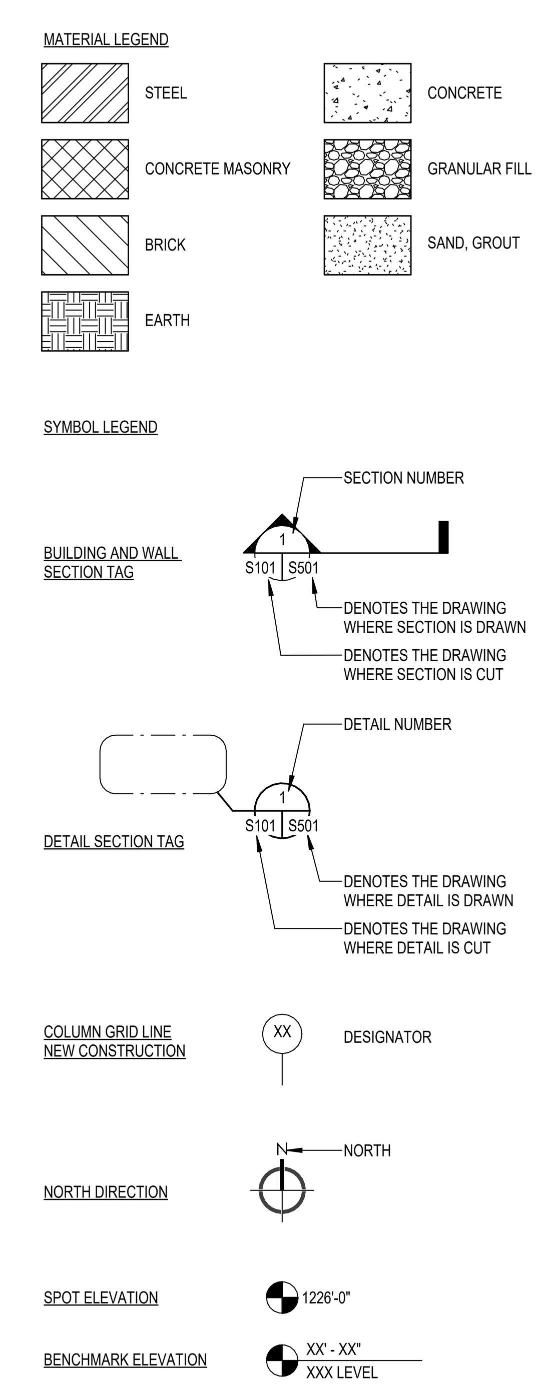

SPECTRUM DESIGN
architects | engineers

Plaza Suite 1
10 Church Avenue, SE
Roanoke, VA 24011

540.342.6001
spectrumpc.com

BEDFORD COUNTY SHERIFF OFFICE EXPANSION

SPECTRUM DESIGN PROJECT NO.: **24112**

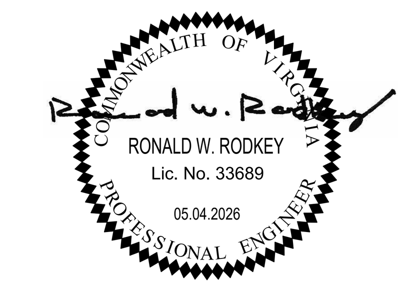

PROJ. MGR.:	CHECKED BY:	DRAWN BY:
JM	RWR	HFR

SHEET ISSUE DATE:
05.04.2026

PROJECT PHASE:
BID DOCUMENTS

SHEET REVISIONS:

SHEET NAME:
GENERAL NOTES

SHEET NUMBER:
S001

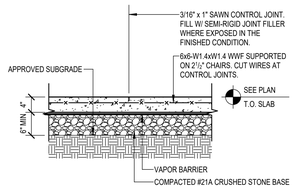

INTERIOR

NOTE
UNLESS NOTED OTHERWISE, SEPARATE SLABS-ON-GRADE FROM VERTICAL SURFACES INCLUDING WALLS, COLUMNS AND PIERS W/ 3/8" x 4" JOINT FILLER STRIP.

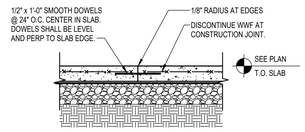

INTERIOR CONSTRUCTION JOINT

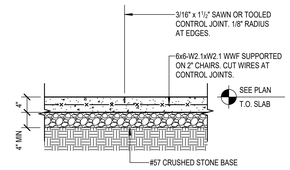

EXTERIOR

NOTES
1. UNLESS NOTED OTHERWISE, SEPARATE SLABS-ON-GRADE FROM VERTICAL SURFACES INCLUDING WALLS, COLUMNS AND PIERS W/ 1/2" x 4" JOINT FILLER STRIP.
2. APPLIES TO EXTERIOR SLABS-ON-GRADE SHOWN ON THE STRUCTURAL PLANS. REFER TO CIVIL FOR OTHER CONCRETE SIDEWALKS AND PAVEMENT.

SLAB-ON-GRADE DETAILS
N.T.S.

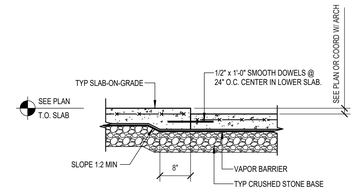

DEPRESSED SLAB-ON-GRADE
N.T.S.

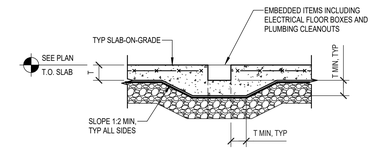

RECESSED ELECTRICAL OUTLET (TYPICAL DETAIL)
N.T.S.

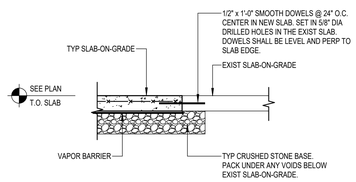

EXISTING SLAB-ON-GRADE INFILL
N.T.S.

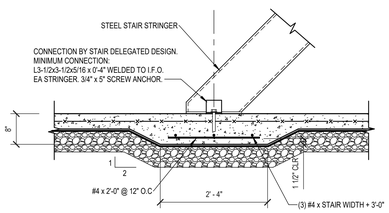

SLAB-ON-GRADE AT STEEL STAIR
N.T.S.

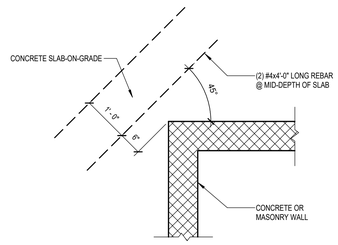

SLAB REINFORCEMENT AT RE-ENTRANT CORNERS
N.T.S.

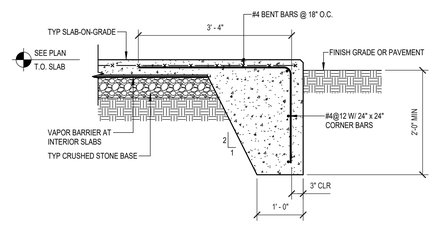

TURNED-DOWN SLAB (TYPICAL DETAIL)
N.T.S.

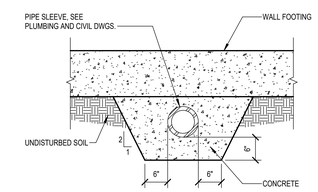

PIPE CROSSING BELOW FOOTING
N.T.S.

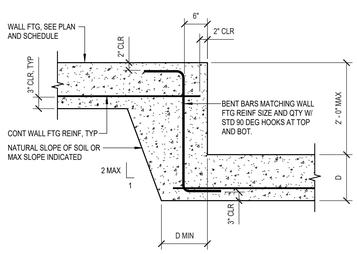

NOTES
1. UNLESS NOTED OTHERWISE, PROVIDE 6'-0" MIN BETWEEN FOOTING STEPS.
2. STEP DEPTH SHALL BE COURSED FOR CMU WALLS.

WALL FOOTING STEP
N.T.S.

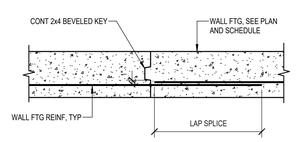

FOOTING CONSTRUCTION JOINT
N.T.S.

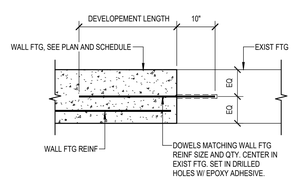

NOTE
IF REQUIRED TO MATCH T.O. EXIST FTG, PROVIDE A FTG STEP 4'-0" MIN FROM E.O. EXIST FTG.

DOWELS AT EXISTING FOOTINGS
N.T.S.

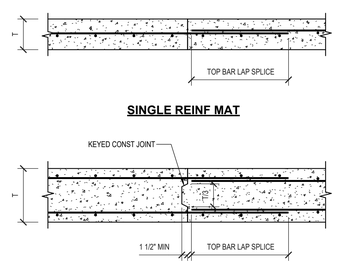

CONCRETE WALL CONSTRUCTION JOINT
N.T.S.

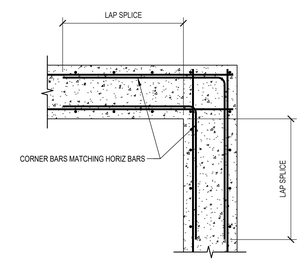

CONCRETE WALL CORNER
N.T.S.

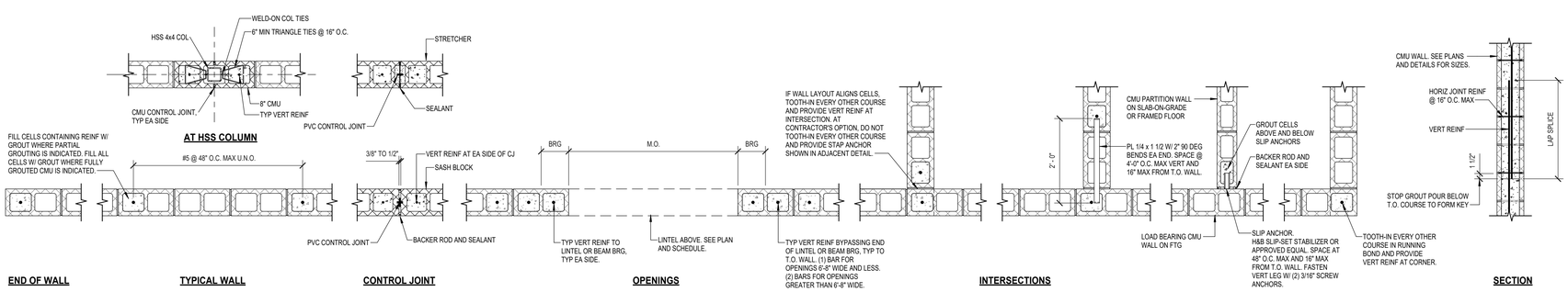

END OF WALL

TYPICAL WALL

NOTES
1. JOINT REINFORCING SHALL BE HOT-DIPPED GALVANIZED HORIZONTAL LADDER-TYPE W/ 9 GA CROSS WIRES. PROVIDE JOINT REINFORCEMENT WITH EYE-AND-PINTEL TIES FOR CAVITY WALLS.
2. PROVIDE HORIZONTAL JOINT REINFORCING AT 16" O.C. MAX.

CONTROL JOINT

NOTES
1. DISCONTINUE HORIZ JOINT REINF AT CONTROL JOINT.
2. BOND BEAM REINF SHALL BE CONT. CUT 3/8" TO 1/2" WIDE x 1/2" DEEP SLOT THRU BOND BEAM MATCHING CONTROL JOINT AND SEAL WHERE EXPOSED.
3. REFER TO ARCHITECTURAL AND SPECIFICATIONS FOR LOCATION.

OPENINGS

NOTE
8" BEARING SHOWN. FOR BEARINGS GREATER THAN 8" PROVIDE A VERT REINF BAR IN EA CELL UNDER THE BEARING AND VERT REINF BARS BYPASSING THE LINTEL OR BEAM AS INDICATED.

INTERSECTIONS

NOTE
PROVIDE PREFABRICATED JOINT REINFORCEMENT TEES AT ALL LOAD BEARING WALL INTERSECTIONS.

AT CMU PARTITIONS

NOTE
DISCONTINUE HORIZ JOINT REINF AT INTERSECTIONS BETWEEN LOAD BEARING CMU WALLS AND CMU PARTITION WALLS.

CORNERS

NOTE
PROVIDE PREFABRICATED JOINT REINFORCEMENT CORNERS.

SECTION

TYPICAL CMU WALL DETAILS
N.T.S.

SPECTRUM DESIGN
architects | engineers

Plaza Suite 1
10 Church Avenue, SE
Roanoke, VA 24011

540.342.6001
spectrumpc.com

BEDFORD COUNTY SHERIFF OFFICE EXPANSION

SPECTRUM DESIGN PROJECT NO.: **24112**

COMMONWEALTH OF VIRGINIA
RONALD W. RODKEY
Lic. No. 33689
05.04.2026
PROFESSIONAL ENGINEER

PROJ. MGR.:	CHECKED BY:	DRAWN BY:
JM	RWR	HFR

SHEET ISSUE DATE:
05.04.2026

PROJECT PHASE:
BID DOCUMENTS

SHEET REVISIONS:

SHEET NAME:
TYPICAL DETAILS

SHEET NUMBER:
S002

ORIGINAL SIZE - ARCH E1 (30X42) | 5/4/2026 2:14:29 PM
C:\Users\jason\24112 Shurf Sheriff\R24_CENTRAL_rwrodkey@SPEC.rvt

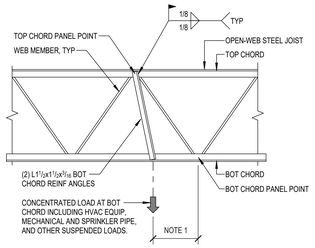

NOTES
1. IF THE CONCENTRATED LOAD IS APPLIED WITHIN 6" OF A BOT CHORD PANEL POINT, BOT CHORD REINFORCING ANGLES ARE NOT REQUIRED. IF NOT, PROVIDE THE REINFORCING ANGLES AS INDICATED.
2. REGARDLESS OF THEIR LOCATION, CONCENTRATED LOADS 100 LB OR LESS DO NOT REQUIRE BOT CHORD REINFORCING ANGLES.
3. CONCENTRATED LOADS SHALL BE SUPPORTED BY HARDWARE W/ CLAMPS THAT LOAD BOTH OF THE BOT CHORD ANGLES AT THE INSIDE CORNERS OF THE ANGLES.
4. CLAMPS SHALL NOT BE USED TO SUSPEND MECHANICAL, ELECTRICAL, OR PLUMBING EQUIPMENT.

JOIST BOTTOM CHORD REINFORCEMENT

N.T.S.

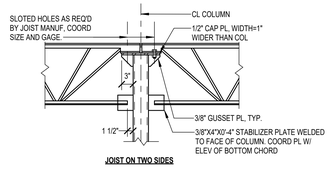

JOIST ON TWO SIDES

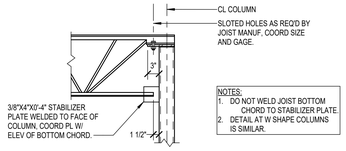

NOTES:
1. DO NOT WELD JOIST BOTTOM CHORD TO STABILIZER PLATE.
2. DETAIL AT W SHAPE COLUMNS IS SIMILAR.

JOIST ON ONE SIDE

JOIST BEARING ON COLUMN

N.T.S.

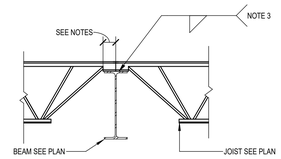

NOTES:
1. PROVIDE MINIMUM 2-1/2" BEARING OF K-SERIES JOIST ON STEEL BEAM. STAGGER JOISTS SLIGHTLY IF REQUIRED TO MAINTAIN 2-1/2" BEARING.
2. PROVIDE MINIMUM 4" BEARING OF LH-SERIES JOIST ON STEEL BEAM.
3. MINIMUM WELDS UNLESS NOTED OTHERWISE:
   K SERIES JOIST: PROVIDE 1" LONG 1/8" FILLET WELD EACH SIDE.
   LH SERIES JOIST: PROVIDE 2" LONG 1/4" FILLET WELD EACH SIDE.

JOIST BEARING ON STEEL BEAM

N.T.S.

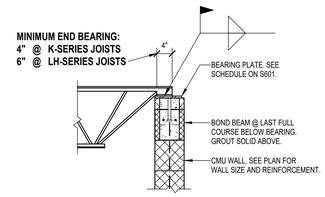

NOTE:
STAGGER JOISTS WHEN REQUIRED TO ACHIEVE MIN END BEARING.

JOIST BEARING ON CMU

N.T.S.

SPECTRUM DESIGN
architects | engineers

Plaza Suite 1
10 Church Avenue, SE
Roanoke, VA 24011

540.342.6001
spectrumpc.com

BEDFORD COUNTY SHERIFF OFFICE EXPANSION

SPECTRUM DESIGN PROJECT NO.: **24112**

COMMONWEALTH OF VIRGINIA
RONALD W. RODKEY
Lic. No. 33689
05.04.2026
PROFESSIONAL ENGINEER

PROJ. MGR.:	CHECKED BY:	DRAWN BY:
JM	**RWR**	**HFR**

SHEET ISSUE DATE:
05.04.2026

PROJECT PHASE:
BID DOCUMENTS

SHEET REVISIONS:

SHEET NAME:
TYPICAL DETAILS

SHEET NUMBER:
S003

ORIGINAL SIZE - ARCH E1 (30X42) | 5/4/2026 12:14:49 PM
C:\Revit Space\24112 Bedford Sheriff\24_CENTRAL_hfrobinson@PROJ.rvt

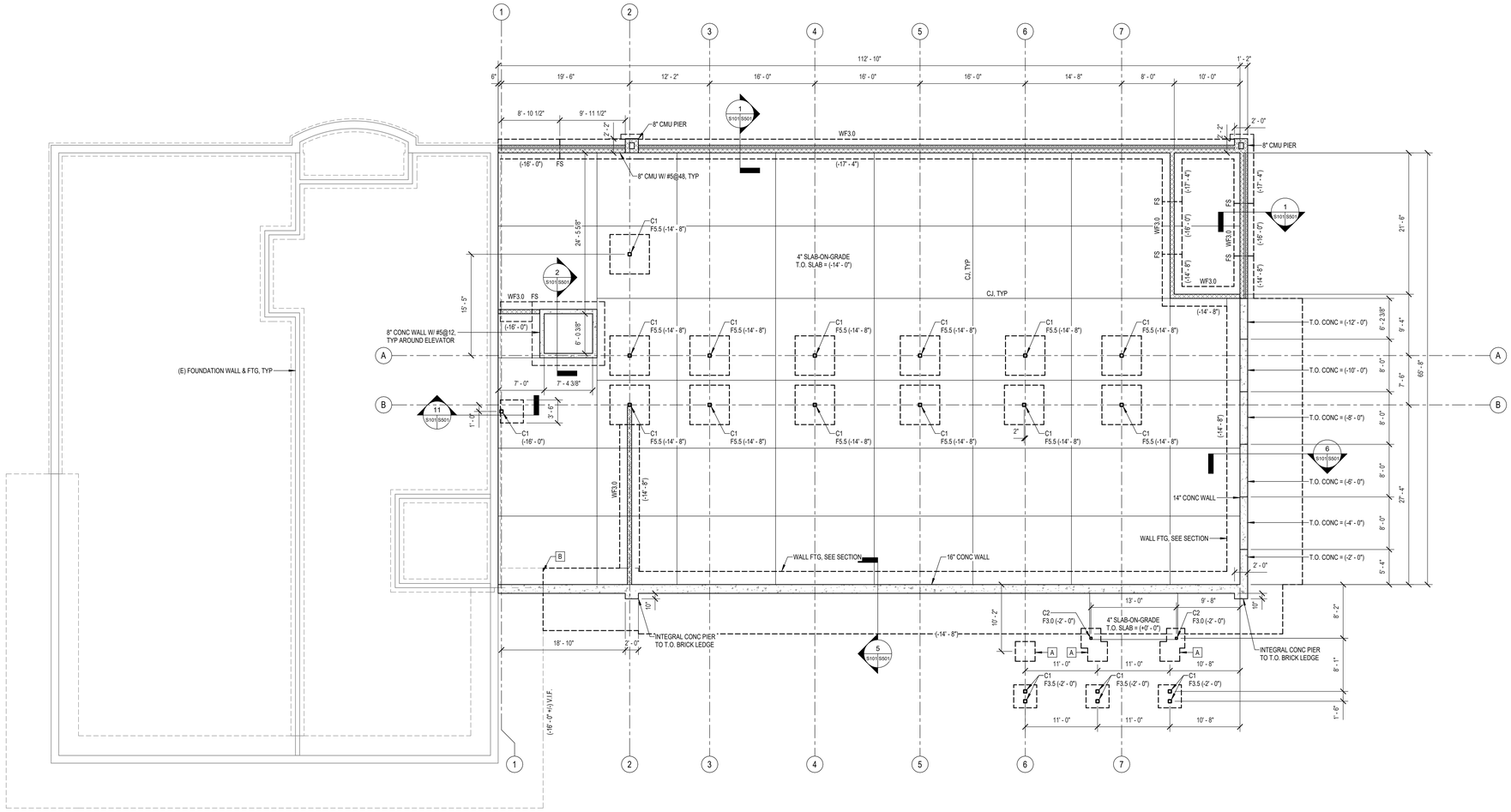

FOUNDATION PLAN

SCALE: 1/8" = 1'-0"

FOUNDATION PLAN NOTES:

1. REFER TO GENERAL NOTES AND TYPICAL DETAILS ON SHEETS S001-S003 AND SCHEDULES ON S601.
2. REFER TO ARCHITECTURAL DRAWINGS AND STRUCTURAL SECTIONS ND DETAILS FOR DIMENSIONS, ELEVATIONS, AND OFFSETS NOT NDICATED.
3. REFERENCE ELEVATION (+0'-0") IS THE MAIN FLOOR T.O. SLAB ELEVATION AND SHALL MATCH THE EXISTING MAIN FLOOR ELEVATION. ALL ELEVATIONS ARE NOTED THUS: (+/- X'-X") RELATIVE TO THE REFERENCE ELEVATION.
4. "WFX" INDICATES A CONTINUOUS WALL FOOTING. "FX" INDICATES A SPREAD FOOTING . SEE FOOTING SCHEDULE ON S601. TOP OF FOOTING ELEVATIONS ARE NOTED THUS: (+/- X'-X") RELATIVE TO THE REFERENCE ELEVATION.
5. "CX" INDICATES STEEL COLUMN TYPE. SEE COLUMN SCHEDULE ON S601 FOR COLUMN, BASE PLATE, AND ANCHOR RODS.
6. "CJ" INDICATES SLAB-ON-GRADE CONTROL OR CONSTRUCTION JOINT. CONSTRUCT JOINTS PER THE TYPICAL DETAILS. IF NONE ARE INDICATED, PROVIDE JOINTS AT 15'-0" O.C. MAXIMUM IN EACH DIRECTION. THE RATIO OF THE DIMENSIONS OF THE LONG SIDE TO THE SHORT SIDE SHALL BE 1.5:1 OR LESS.
7. "FS" INDICATES FOOTING STEP. SEE TYPICAL DETAIL ON S002. COORDINATE FOOTING STEP LOCATIONS WITH FINISH GRADE AND MASONRY COURSING.

KEYED NOTES

A	F3.0 (-2' - 0"). FOOTINGS FOR PREMANUFACTURED ALULUMINUM CANOPY. DO NOT CONSTRUCT FOOTINGS UNTIL THE CANOPY SUBMITTAL HAS BEEN APPROVED BY THE ENGINEER AND REVISIONS HAVE BEN MADE TO COORDINATE WITH THE CANOPY REACTIONS AND MOUNTING DETAILS.
B	DOWEL NEW FOOTING LONGITUDINAL REINFORCEMENT 12" INTO THE SAW CUT EDGE OF THE EXISTING FOOTING AND EPOXY.
C	DOWEL NEW WALL HORIZONTAL REINFORCEMENT 8" INTO THE SIDE OF THE EXISTING CONCRETE WALL AND EPOXY.

SCALE: 1/8" = 1'-0"

SPECTRUM DESIGN
architects | engineers

Plaza Suite 1
10 Church Avenue, SE
Roanoke, VA 24011

540.342.6001
spectrumpc.com

BEDFORD COUNTY SHERIFF OFFICE EXPANSION

SPECTRUM DESIGN PROJECT NO.: **24112**

COMMONWEALTH OF VIRGINIA
RONALD W. RODKEY
Lic. No. 33689
05.04.2026
PROFESSIONAL ENGINEER

PROJ. MGR.:	CHECKED BY:	DRAWN BY:
JM	RWR	HFR

SHEET ISSUE DATE:
05.04.2026

PROJECT PHASE:
BID DOCUMENTS

SHEET REVISIONS:

PLAN NORTH SITE NORTH

SHEET NAME:
FOUNDATION PLAN

SHEET NUMBER:
S101

ORIGINAL SIZE: ARCH E1 (30X42) | 3/4/2026 12:13:14 PM
C:\Revit Stores\241112 Revit Sheet Files CENTRAL_hfrazier.rvt

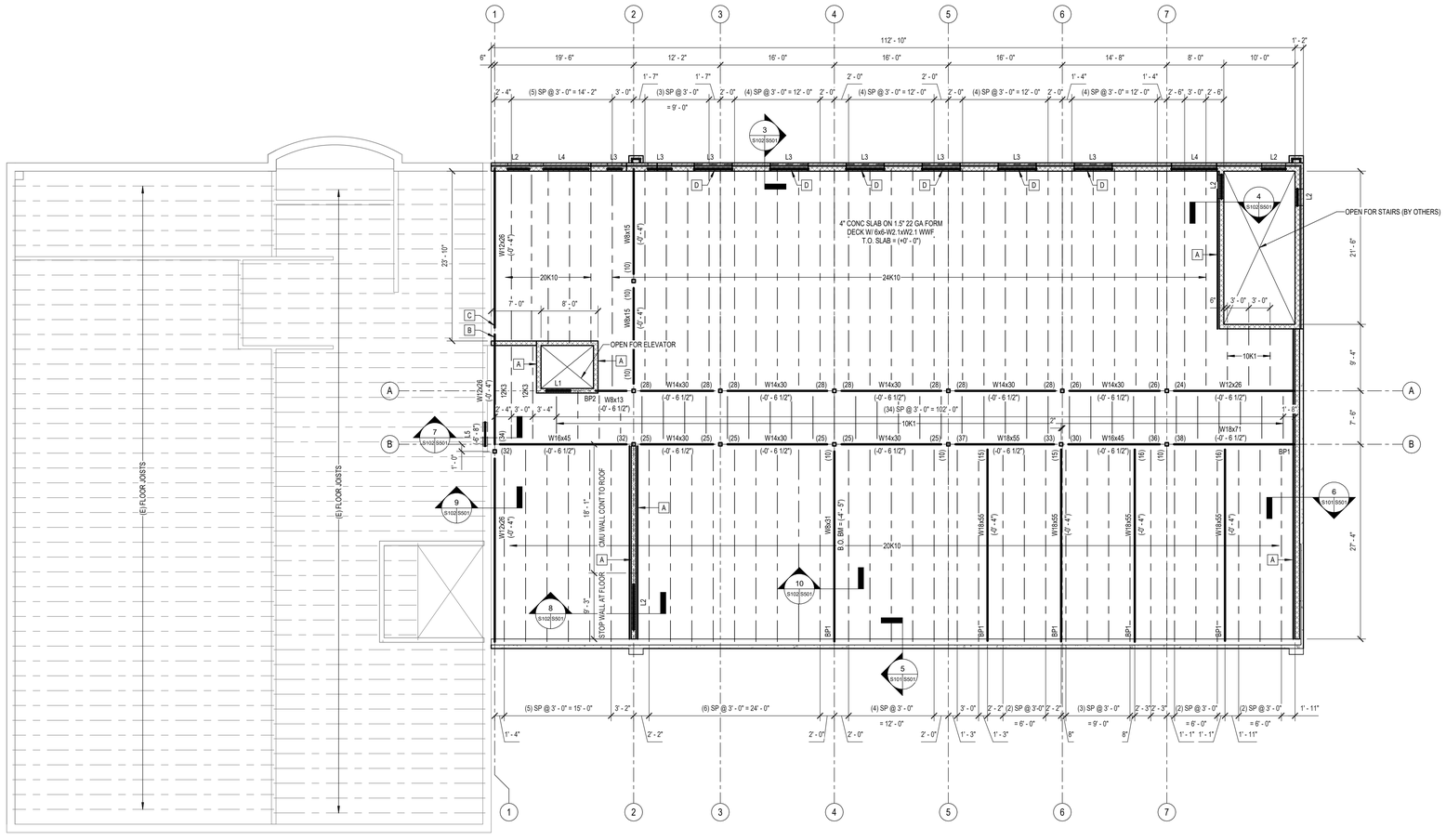

FIRST FLOOR FRAMING PLAN

SCALE: 1/8" = 1'-0"

FRIST FLOOR FRAMING PLAN NOTES:

1. REFER TO GENERAL NOTES AND TYPICAL DETAILS ON SHEETS S001-S003 AND SCHEDULES ON S601.
2. REFER TO ARCHITECTURAL DRAWINGS AND STRUCTURAL SECTIONS AND DETAILS FOR DIMENSIONS, ELEVATIONS, AND OFFSETS NOT INDICATED.
3. REFERENCE ELEVATION (+0'-0") IS THE MAIN FLOOR T.O. SLAB ELEVATION AND SHALL MATCH THE EXISTING MAIN FLOOR ELEVATION. ALL ELEVATIONS ARE NOTED THUS: (+/- X'-X") RELATIVE TO THE REFERENCE ELEVATION.
4. "LX" INDICATES LINTEL. SEE LINTEL SCHEDULE ON S601. SEE ROOF FRAMING PLAN FOR LINTELS NOT INDICATED.
5. ALL STRUCTURAL STEEL BEAMS AND JOISTS BEARING ON CMU OR CONCRETE SHALL BEAR ON A BEARING PLATE. SEE SECTIONS AND BEARING PLATE SCHEDULE ON SHEET S601. BEARING PLATES SHOWN ON PLAN ARE FOR CLARITY OR EMPHASIS.
6. TYPICAL SLAB-ON-DECK CONSTRUCTION IS 4" TOTAL DEPTH ON 1-1/2", 22 GAUGE FORM DECK W/ (1) LAYER OF 6x6-W2.1xW2.1 WWF CENTERED BETWEEN THE TOP OF THE DECK FLUTE AND TOP OF SLAB. FORM DECK SHALL BE PLACED WITH THE WIDER FLANGE ON THE BOTTOM.

KEYED NOTES:

A	SUPPORT FLOOR DECK AT CMU WALL W/ STEEL LEDGER PER 6/S501
B	CANTILEVER BEAM END 1'-0" BEYOND F.O. WALL
C	SUPPORT BEAM END W/ SHEAR TAB TO END OF CANTILEVERED BEAM
D	SUPPORT BRICK ABOVE OPENING W/ STEEL LEDGER PER 14/S502

0 4' 8' 16'
SCALE: 1/8" = 1' - 0"

SPECTRUM DESIGN
architects | engineers

Plaza Suite 1
10 Church Avenue, SE
Roanoke, VA 24011

540.342.6001
spectrumpc.com

BEDFORD COUNTY SHERIFF OFFICE EXPANSION

SPECTRUM DESIGN PROJECT NO.: **24112**

COMMONWEALTH OF VIRGINIA
RONALD W. RODKEY
Lic. No. 33689
05.04.2026
PROFESSIONAL ENGINEER

PROJ. MGR.:	CHECKED BY:	DRAWN BY:
JM	RWR	HFR

SHEET ISSUE DATE:
05.04.2026

PROJECT PHASE:
BID DOCUMENTS

SHEET REVISIONS:

PLAN NORTH SITE NORTH

SHEET NAME:
FLOOR FRAMING PLAN

SHEET NUMBER:
S102

ORIGINAL SIZE: ARCH E1 (30X42) | 3/4/2026 12:15:42 PM
C:\Revit Series 2412\ 12 Revit Sheet\Bdc CENTRAL_HrdpnsonSBPWQ.rvt

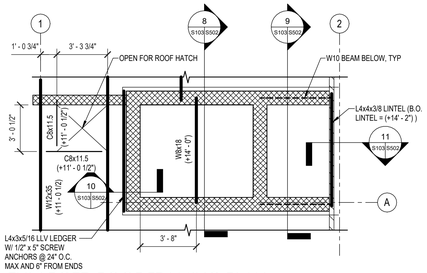

ENLARGED ROOF FRAMING PLAN

SCALE: 1/4" = 1'-0"

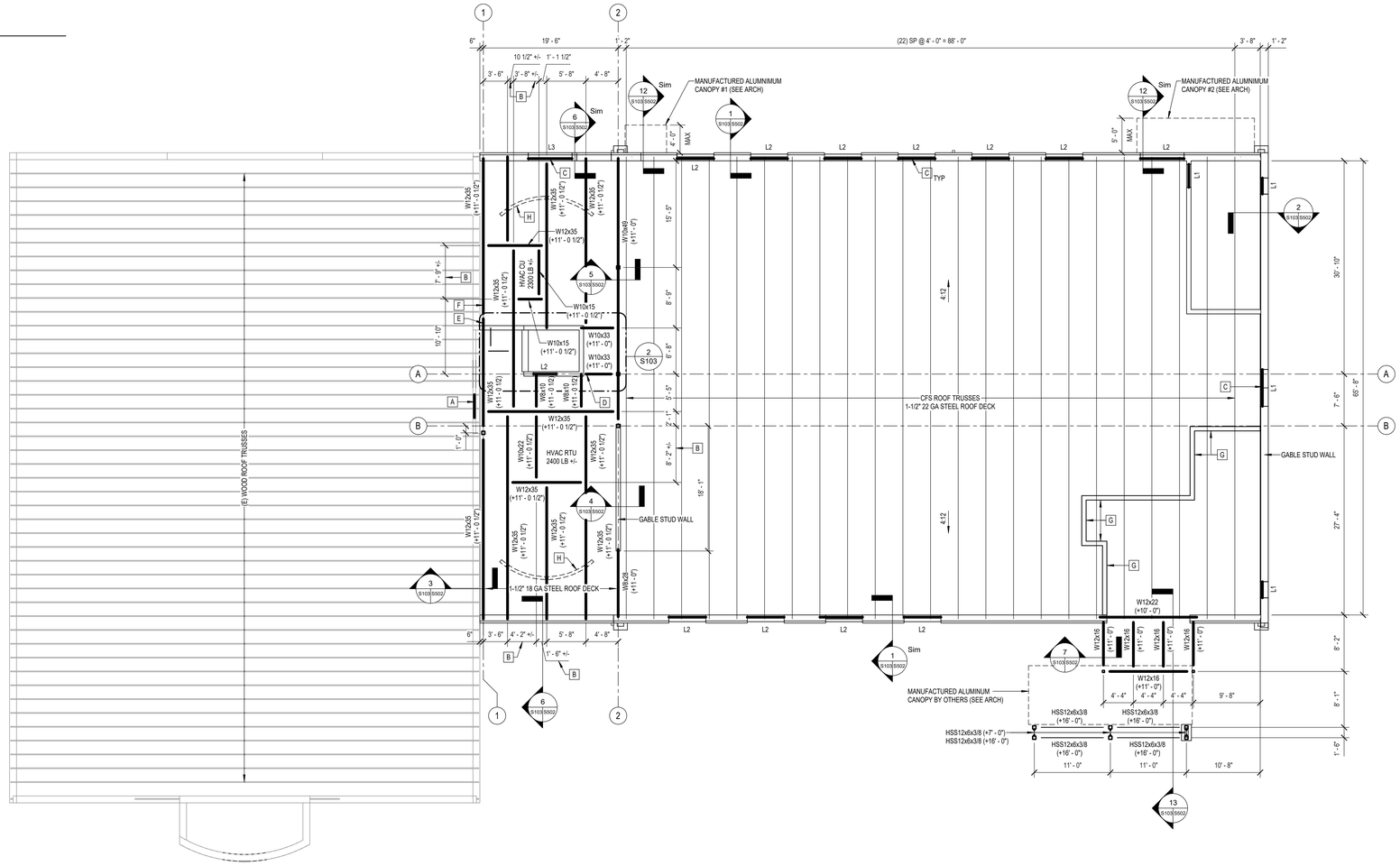

ROOF FRAMING PLAN

SCALE: 1/8" = 1'-0"

ROOF FRAMING PLAN NOTES:

1. REFER TO GENERAL NOTES AND TYPICAL DETAILS ON SHEETS S001-S003 AND SCHEDULES ON S601.
2. REFER TO ARCHITECTURAL DRAWINGS AND STRUCTURAL SECTIONS AND DETAILS FOR DIMENSIONS, ELEVATIONS, AND OFFSETS NOT INDICATED.
3. REFERENCE ELEVATION (+0'-0") IS THE MAIN FLOOR T.O. SLAB ELEVATION AND SHALL MATCH THE EXISTING MAIN FLOOR ELEVATION. ALL ELEVATIONS ARE NOTED THUS: (+/- X'-X") RELATIVE TO THE REFERENCE ELEVATION.
4. "LX" INDICATES LINTEL. SEE LINTEL SCHEDULE ON S601. COORDINATE LINTEL ELEVATION WITH ARCHITECTURAL.
5. ALL STRUCTURAL STEEL BEAMS AND JOISTS BEARING ON CMU OR CONCRETE SHALL BE A BEARING PLATE. SEE SECTIONS AND BEARING PLATE SCHEDULE ON SHEET S601. BEARING PLATES SHOWN ON PLAN ARE FOR CLARITY OR EMPHASIS.
6. TYPICAL STEEL ROOF DECK SHALL BE 1-1/2 INCH, TYPE B. SEE PLAN FOR GAGE.

KEYED NOTES:

A	(2) 2x12 HEADER W/ (1) 2x6 JACK STUD & (2) 2x6 KING STUDS EA END
B	COORDINATE DIMENSIONS WITH HVAC UNIT CURBS.
C	8" CMU HALF BLOCKS W/ (1)#5 VERT REINF. EXTEND VERT REINF THRU LINTEL TO TOP OF WALL. LINTEL REINFORCEING IS CONT OVER THE TWO ADJACENT OPENINGS
D	PROVIDE FRAMING CONNECTION FOR W10 BEAM TO WEB OF W12 BEAM
E	CANTILEVER BEAM END 1'-0" BEYOND F.O. WALL
F	PROVIDE FRAMING CONNECTION FOR BEAM TO BE SUPPORTED BY END OF CANTILEVERED BEAM
G	8" CMU PARTITION WALL W/ #5@72. FULLY GROUT WALL UP TO (+8' - 0")
H	MECHANICAL SCREEN BY OTHERS (SEE ARCH). ALIGN SUPPORT POSTS OVER BEAMS IN ROOF FRAMING AND WELD ALL AROUND W/ 1/4" FILLET WELD

0 4' 8' 16'
SCALE: 1/8" = 1' - 0"

SPECTRUM DESIGN
architects | engineers

Plaza Suite 1
10 Church Avenue, SE
Roanoke, VA 24011

540.342.6001
spectrumpc.com

BEDFORD COUNTY SHERIFF OFFICE EXPANSION

SPECTRUM DESIGN PROJECT NO.: **24112**

COMMONWEALTH OF VIRGINIA
RONALD W. RODKEY
Lic. No. 33689
05.04.2026
PROFESSIONAL ENGINEER

PROJ. MGR.:	CHECKED BY:	DRAWN BY:
JM	RWR	HFR

SHEET ISSUE DATE:
05.04.2026

PROJECT PHASE:
BID DOCUMENTS

SHEET REVISIONS:

PLAN NORTH SITE NORTH

SHEET NAME:
ROOF FRAMING PLAN

SHEET NUMBER:
S103

ORIGINAL SIZE - ARCH E1 (30X42) | 5/4/2026 12:16:13 PM
C:\Revit Stuff\24112 Bfcd Sheriff\24-CENTRAL_hvacmacd2RFJ.rvt

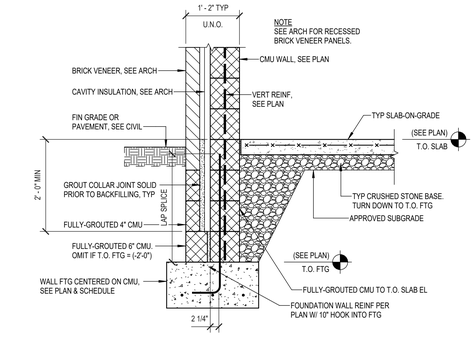

1 TYPICAL MASONRY FOUNDATION WALL

S501 SCALE: 3/4" = 1'-0"
REF: S101

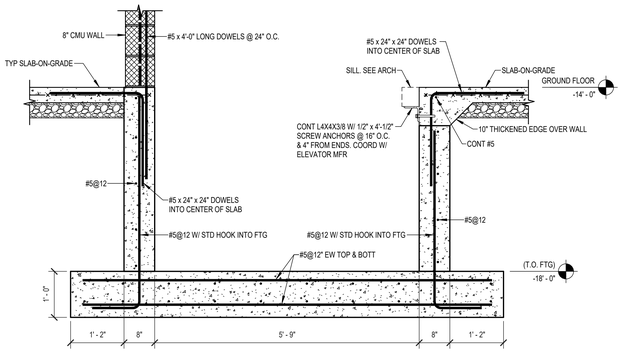

2 SECTION

S501 SCALE: 3/4" = 1'-0"
REF: S101

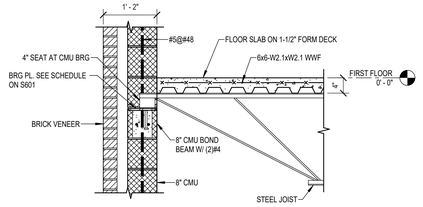

3 SECTION

S501 SCALE: 3/4" = 1'-0"
REF: S102

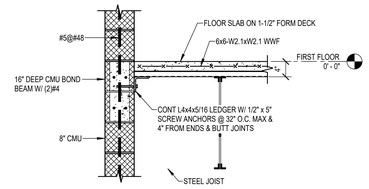

4 SECTION

S501 SCALE: 3/4" = 1'-0"
REF: S102

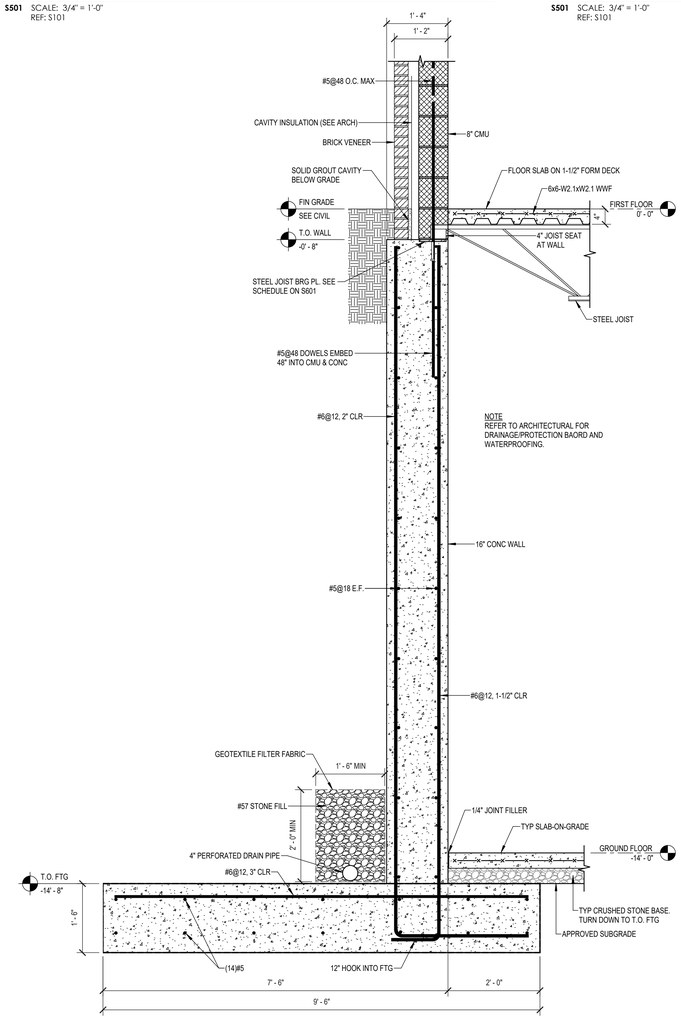

5 SECTION

S501 SCALE: 3/4" = 1'-0"
REF: S101

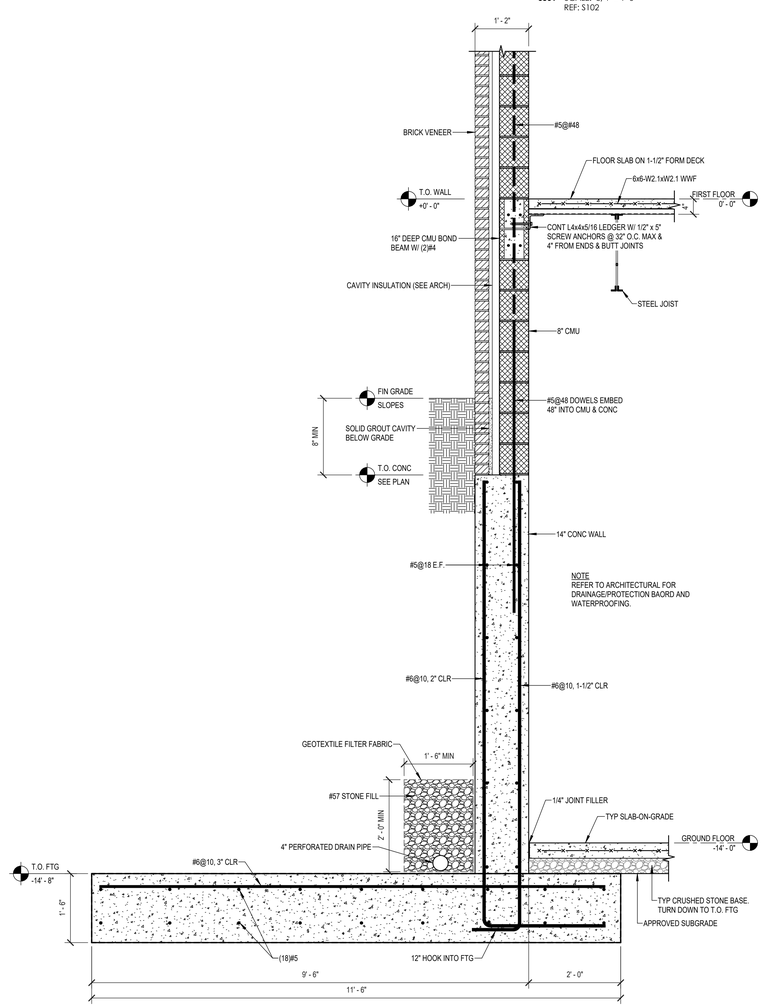

6 SECTION

S501 SCALE: 3/4" = 1'-0"
REF: S101

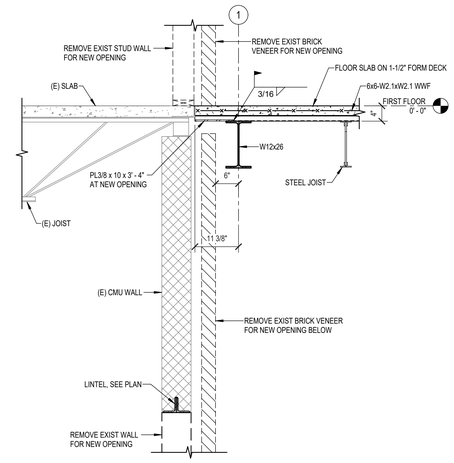

7 SECTION

S501 SCALE: 3/4" = 1'-0"
REF: S102

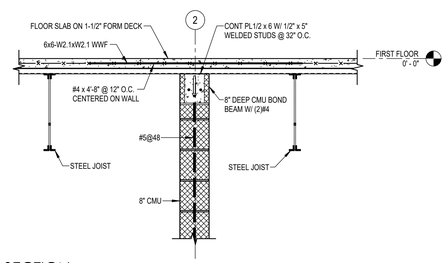

8 SECTION

S501 SCALE: 3/4" = 1'-0"
REF: S102

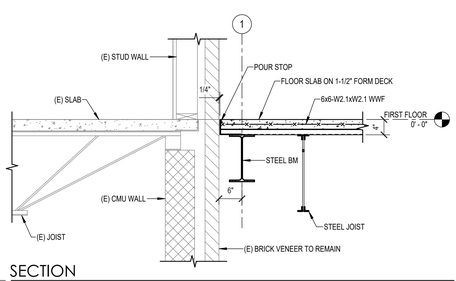

9 SECTION

S501 SCALE: 3/4" = 1'-0"
REF: S102

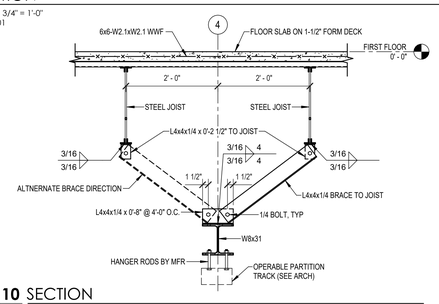

10 SECTION

S501 SCALE: 3/4" = 1'-0"
REF: S102

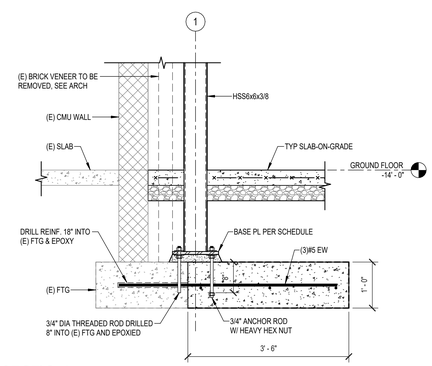

11 SECTION

S501 SCALE: 3/4" = 1'-0"
REF: S101

0 1' 2' 4'
SCALE: 3/4" = 1' - 0"

SPECTRUM DESIGN
architects | engineers

Plaza Suite 1
10 Church Avenue, SE
Roanoke, VA 24011

540.342.6001
spectrumpc.com

BEDFORD COUNTY SHERIFF OFFICE EXPANSION

SPECTRUM DESIGN PROJECT NO.: **24112**

COMMONWEALTH OF VIRGINIA
RONALD W. RODKEY
Lic. No. 33689
05.04.2026
PROFESSIONAL ENGINEER

PROJ. MGR.:	CHECKED BY:	DRAWN BY:
JM	RWR	HFR

SHEET ISSUE DATE:
05.04.2026

PROJECT PHASE:
BID DOCUMENTS

SHEET REVISIONS:

PLAN NORTH SITE NORTH

SHEET NAME:
SECTIONS AND DETAILS

SHEET NUMBER:
S501

ORIGINAL SIZE - ARCH E1 (30X42) | 5/4/2026 12:15:43 PM
C:\Users\jonathan\12 Revit Sheet\RDS CENTRAL_Implementation\RWR2.rvt

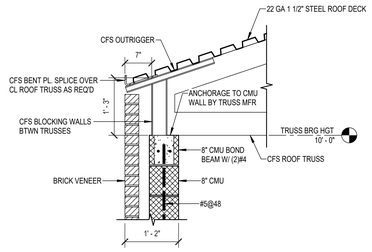

1 SECTION
S502 SCALE: 3/4" = 1'-0"
REF: S103

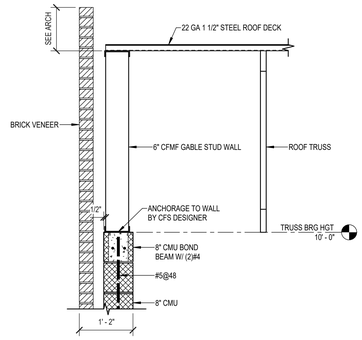

2 SECTION
S502 SCALE: 3/4" = 1'-0"
REF: S103

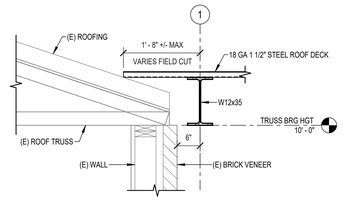

3 SECTION
S502 SCALE: 3/4" = 1'-0"
REF: S103

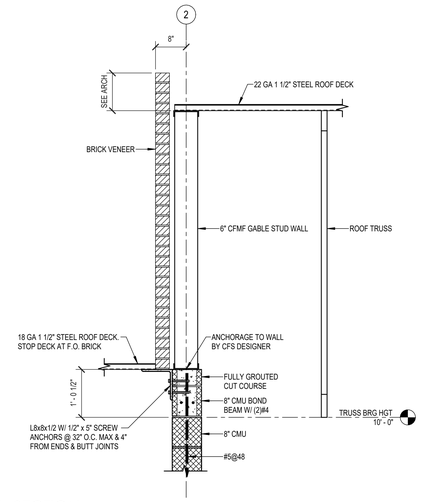

4 SECTION
S502 SCALE: 3/4" = 1'-0"
REF: S103

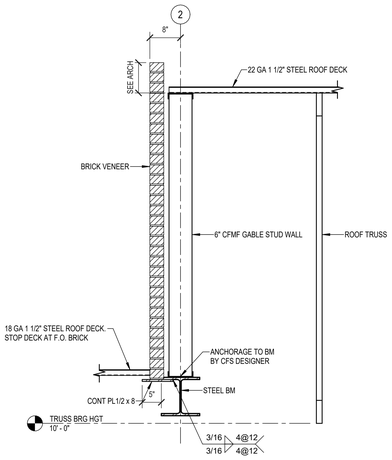

5 SECTION
S502 SCALE: 3/4" = 1'-0"
REF: S103

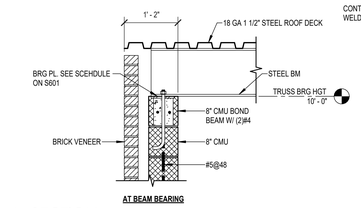

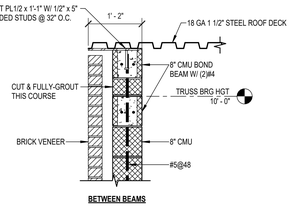

6 SECTION
S502 SCALE: 3/4" = 1'-0"
REF: S103

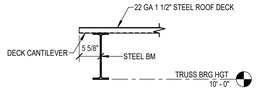

7 SECTION
S502 SCALE: 3/4" = 1'-0"
REF: S103

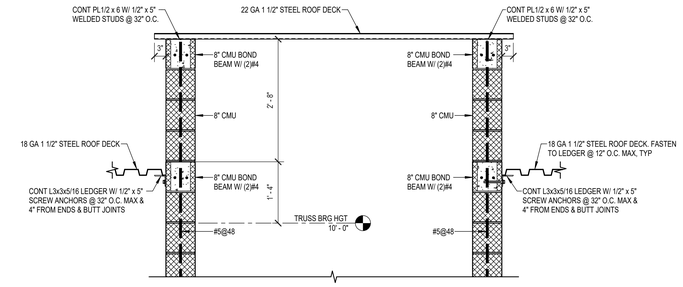

8 SECTION
S502 SCALE: 3/4" = 1'-0"
REF: S103

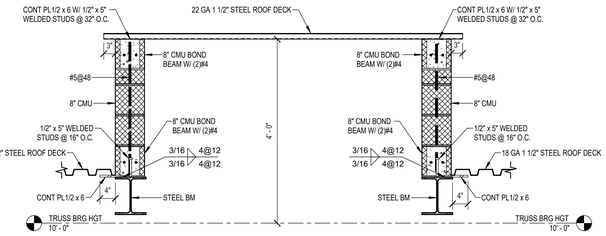

9 SECTION
S502 SCALE: 3/4" = 1'-0"
REF: S103

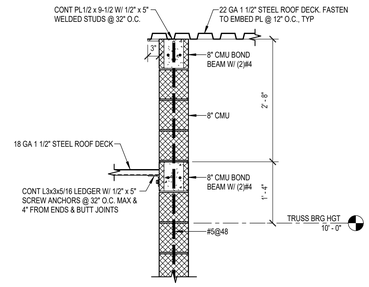

10 SECTION
S502 SCALE: 3/4" = 1'-0"
REF: S103

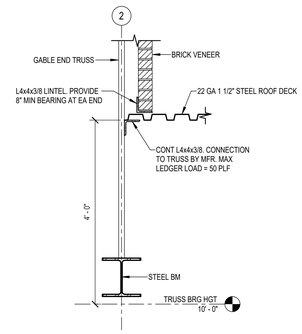

11 SECTION
S502 SCALE: 3/4" = 1'-0"
REF: S103

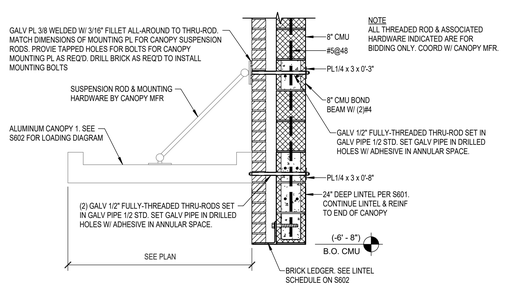

NOTE
ALL THREADED ROD & ASSOCIATED HARDWARE INDICATED ARE FOR BIDDING ONLY. COORD W/ CANOPY MFR.

12 SECTION
S502 SCALE: 3/4" = 1'-0"
REF: S103

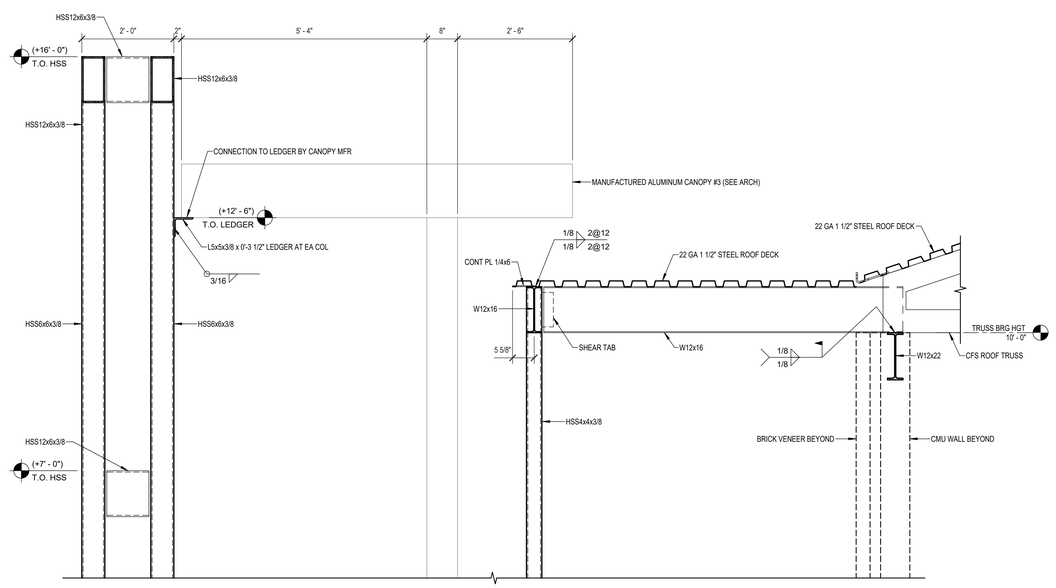

13 SECTION
S502 SCALE: 3/4" = 1'-0"
REF: S103

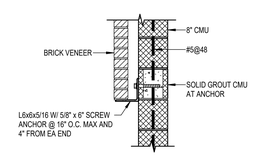

14 SECTION
S502 SCALE: 3/4" = 1'-0"

0 1' 2' 4'
SCALE: 3/4" = 1' - 0"

SPECTRUM DESIGN
architects | engineers

Plaza Suite 1
10 Church Avenue, SE
Roanoke, VA 24011

540.342.6001
spectrumpc.com

BEDFORD COUNTY SHERIFF OFFICE EXPANSION

SPECTRUM DESIGN PROJECT NO.: **24112**

COMMONWEALTH OF VIRGINIA
RONALD W. RODKEY
Lic. No. 33689
05.04.2026
PROFESSIONAL ENGINEER

PROJ. MGR.:	CHECKED BY:	DRAWN BY:
JM	RWR	HFR

SHEET ISSUE DATE:
05.04.2026

PROJECT PHASE:
BID DOCUMENTS

SHEET REVISIONS:

PLAN NORTH SITE NORTH

SHEET NAME:
SECTIONS AND DETAILS

SHEET NUMBER:
S502

ORIGINAL SIZE - ARCH E1 (30X42) | 5/4/2026 12:27:13 PM
C:\Revit Sites\24112 Proj\Shaft\Rgb CENTRAL_hrodrocm@fgrp.com

FOOTING SCHEDULE

MARK	WIDTH	LENGTH	DEPTH	REINF A	REINF B	REMARKS
F3.0	3' - 0"	3' - 0"	1' - 0"	(3)#5	(3)#5	
F6.0	6' - 0"	6' - 0"	1' - 4"	(5)#6	(5)#6	
WF3.0	3' - 0"	CONT.	1' - 0"	(3)#5	-	CONT.

NOTES:
1. REINF A BARS ARE PARALLEL TO THE LENGTH (LW).
2. REINF B BARS ARE PARALLEL TO THE WIDTH (SW).
3. ALL REINFORCING BARS ARE BOTTOM BARS (BOT) UNLESS NOTED OTHERWISE.
4. BOTTOM BARS (BOT) SHALL HAVE 3" CLEAR COVER.
5. TOP BARS (TOP) SHALL HAVE 2" CLEAR COVER.
6. AT SPREAD FOOTINGS (FX.X) THAT ARE INTEGRAL WITH WALL FOOTINGS (WFX.X), THE WALL FOOTING REINFORCING SHALL BE CONTINUOUS THROUGH THE SPREAD FOOTING.

LINTEL SCHEDULE

MARK	CMU SUPPORT	BRICK & CMU SUPPORT	SCHEMATIC	REMARKS
L1	8" x 8" CMU LINTEL BLOCK W/ (2)#5	L6x6x5/16	A	SEE SCHEMATIC B FOR BRICK LEDGER ATTACHMENT WHERE OCCURS
L2	8" x 16" CMU LINTEL BLOCK W/ (2)#5 TOP & BOT	L6x6x5/16	A	SEE SCHEMATIC B FOR BRICK LEDGER ATTACHMENT WHERE OCCURS
L3	8" x 24" CMU LINTEL BLOCK W/ (2)#5 TOP, MID & BOT	L6x6x5/16	C	SEE SCHEMATIC B FOR BRICK LEDGER ATTACHMENT WHERE OCCURS
L4	W8x15	CONT BOTT PL 1/2 x 1' - 1 1/2"	D	
L5	(2) L4x3-1/2x5/16 LLV	L4x3-1/2x5/16	E	

NOTES:
1. ALL MASONRY WALL OPENINGS, INCLUDING MECHANICAL, ELECTRICAL AND PLUMBING WALL PENETRATIONS, SHALL HAVE A LINTEL WITH THE FOLLOWING EXPECTIONS:
   A. ISOLATED CORED ROUND HOLES 12" DIA OR LESS
   B. ISOLATED RECTANGULAR OPENINGS 8" WIDE OR LESS.
2. CONTACT ENGINEER IF GROUPS OF WALL PENETRATIONS ARE REQUIRED DURING LAYOUT.
3. PROVIDE 8" MINIMUM BEARING FOR ALL CMU AND STEEL LINTELS AT EACH END ON FULLY-GROUTED CMU TO THE TOP OF THE FOOTING.
4. PROVIDE BEARING PLATE AT EACH END WHERE SCHEDULED.
5. ALL VERTICAL CMU WALL REINFORCING INTERRUPTED BY LINTEL BEARING SHALL BE PROVIDED BEYOND END OF LINTEL AND LAPPED WITH CONTINUOUS REINFORCING ABOVE AND BELOW.
6. ALL STEEL LINTELS, ANGLE LEDGERS, AND LOOSE ANGLES IN NEW AND EXISTING EXTERIOR WALLS SHALL BE HOT-DIPPED GALVANIZED.

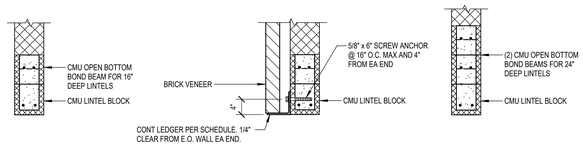

SCHEMATIC A SCHEMATIC B SCHEMATIC C

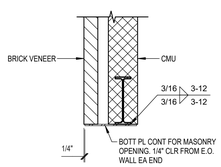

SCHEMATIC D

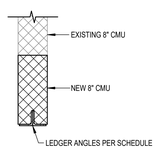

SCHEMATIC E

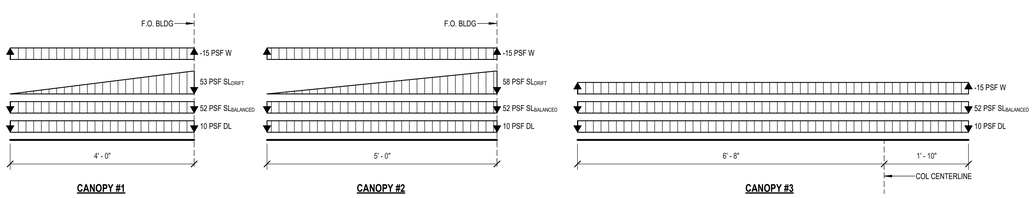

CANOPY #1 CANOPY #2 CANOPY #3

CANOPY LOADING DIAGRAMS

SCALE: 3/4" = 1'-0"

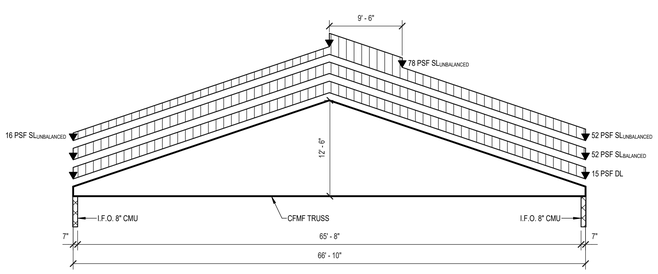

DOWNWARD

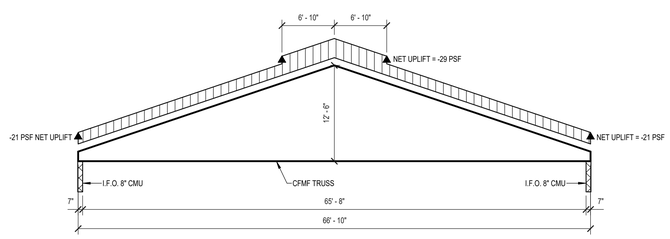

UPLIFT

ROOF TRUSS LOADING DIAGRAMS

SCALE: 1/8" = 1'-0"

NOTES:
1. DEAD LOAD DOES NOT INCLUDE TRUSS SELF-WEIGHT.
2. BALANCED AND UNBALANCED SNOW LOADS SHALL NOT BE APPLIED SIMULTANEOUSLY.
3. UNBALANCED SNOW LOAD SHALL BE APPLIED AS SHOWN AND MIRRORED ON TRUSS.
4. NET UPLIFT LOADS ARE BASED ON THE LOAD COMBINATION 0.6D+0.6W.

BEARING PLATE SCHEDULE

MARK	BEARING PLATE	ANCHOR RODS	TYPE	NOTES
BP1	PL 3/4"x6"x-0'-10"	(2) 5/8" HOOKED	A	TYPICAL @ BEAM BRG ON PERP 8" CMU WALL, UNLESS NOTED OTHERWISE
BP2	PL 1/2"x6"x0'-7"	(2) 5/8" HOOKED	B	TYPICAL @ BEAM BRG ON PARALLEL 8" CMU WALL, UNLESS NOTED OTHERWISE
BP3	PL 1/2"x6"x0'-10"	(2) 1/2"x5" STUDS	C	TYPICAL @ K-SERIES JOIST BRG ON CMU OR CONC, UNLESS NOTED OTHERWISE
BP4	PL 1/2"x7"x0'-10"	(2) 1/2"x5" STUDS	D	TYPICAL @ CFMF TRUSS BRG ON CMU, UNLESS NOTED OTHERWISE

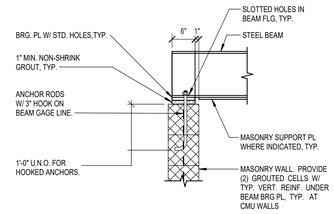

TYPE A

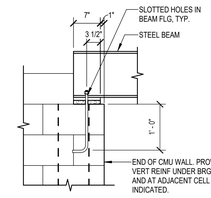

TYPE B

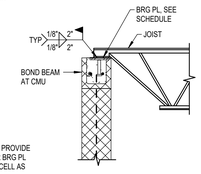

TYPE C

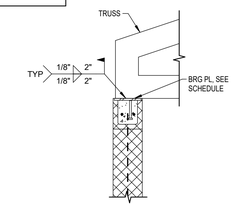

TYPE D

COLUMN SCHEDULE

MARK	COLUMN SIZE	BASE PLATE	ANCHOR RODS	REMARKS
C1	HSS6X6X3/8	3/4" x 1'-0" x 1'-0"	(4) 3/4" DIA.	
C2	HSS4X4X3/8	3/4" x 0'-10" x 0'-10"	(4) 3/4" DIA.	

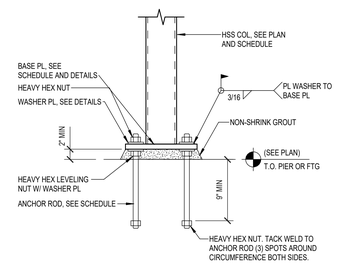

TYPICAL COLUMN BASE PLATE DETAIL

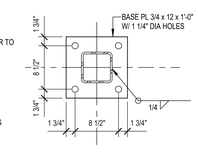

HSS 6x6

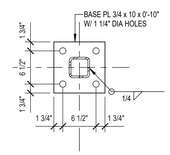

HSS 4x4

1" DIA ANCHOR RODS:
PL 3/8 x 3 x 0'-3" W/ 1 1/16" DIA HOLE
3/4" DIA ANCHOR RODS:
PL 1/4 x 2 1/2 x 0'-2 1/2" W/ 13/16" DIA HOLE

WASHER PL DETAIL

SPECTRUM DESIGN
architects | engineers

Plaza Suite 1
10 Church Avenue, SE
Roanoke, VA 24011

540.342.6001
spectrumpc.com

BEDFORD COUNTY SHERIFF OFFICE EXPANSION

SPECTRUM DESIGN PROJECT NO.: 24112

COMMONWEALTH OF VIRGINIA
RONALD W. RODKEY
Lic. No. 33689
05.04.2026
PROFESSIONAL ENGINEER

PROJ. MGR.:	CHECKED BY:	DRAWN BY:
JM	RWR	HFR

SHEET ISSUE DATE:
05.04.2026

PROJECT PHASE:
BID DOCUMENTS

SHEET REVISIONS:

PLAN NORTH SITE NORTH

SHEET NAME:
SCHEDULES

SHEET NUMBER:
S601

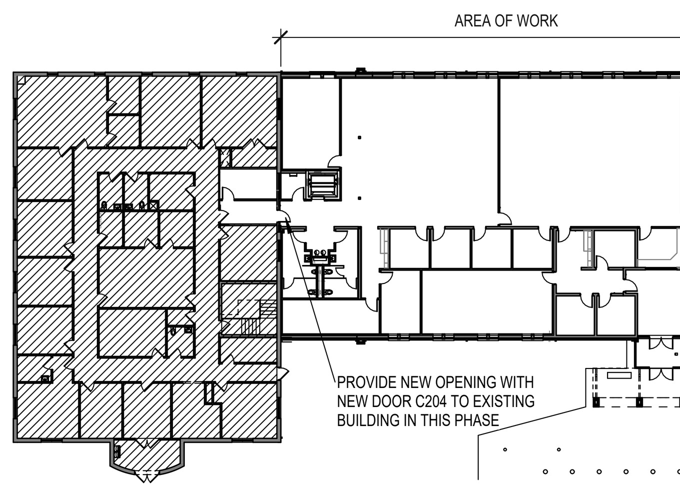

NOTES:
- GC TO CUT OPENING AND INSTALL NEW DOOR C204 DURING PHASE 1 CONSTRUCTION.
- OWNER WILL PROVIDE ACCESS TO EXISTING OFFICE FOR INSTALLATION OF NEW DOOR.
- PROVIDE TEMPORARY DUST PARTITION DURING CONSTRUCTION.
- DOOR TO REMAIN SECURE IN BOTH DIRECTIONS DURING PHASE 1 CONSTRUCTION TO PREVENT ACCESS BETWEEN EXISTING BUILDING AND CONSTRUCTION AREAS
- COORDINATE SCHEDULE OF CONSTRUCTION WITH OWNER.

MAIN FLOOR PLAN - PHASE 1

N.T.S.

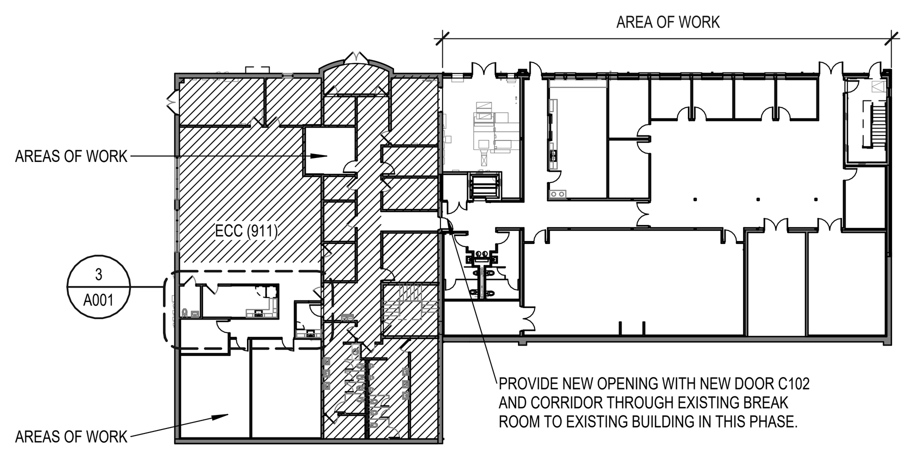

NOTES:
- GC TO CUT OPENING AND INSTALL NEW DOOR C102 DURING PHASE 1 CONSTRUCTION.
- OWNER WILL PROVIDE ACCESS TO EXISTING BREAK ROOM FOR INSTALLATION OF NEW DOOR.
- REMOVE ONLY THE AMOUNT OF EXISTING CASEWORK AS REQUIRED TO INSTALL NEW DOOR AND CORRIDOR DURING THIS PHASE.
- PROVIDE TEMPORARY DUST PARTITION DURING CONSTRUCTION.
- DOOR TO REMAIN SECURE IN BOTH DIRECTIONS DURING PHASE 1 CONSTRUCTION TO PREVENT ACCESS BETWEEN EXISTING BUILDING AND CONSTRUCTION AREAS.
- COORDINATE SCHEDULE OF CONSTRUCTION WITH OWNER.

LOWER FLOOR PLAN - PHASE 1

N.T.S.

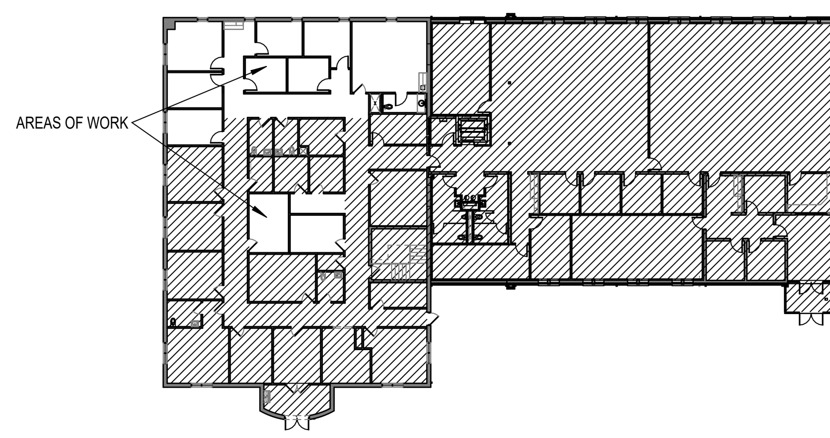

NOTES:
- PROVIDE TEMPORARY DUST PARTITION DURING CONSTRUCTION.
- COORDINATE SCHEDULE OF CONSTRUCTION WITH OWNER.

MAIN FLOOR PLAN - PHASE 2

N.T.S.

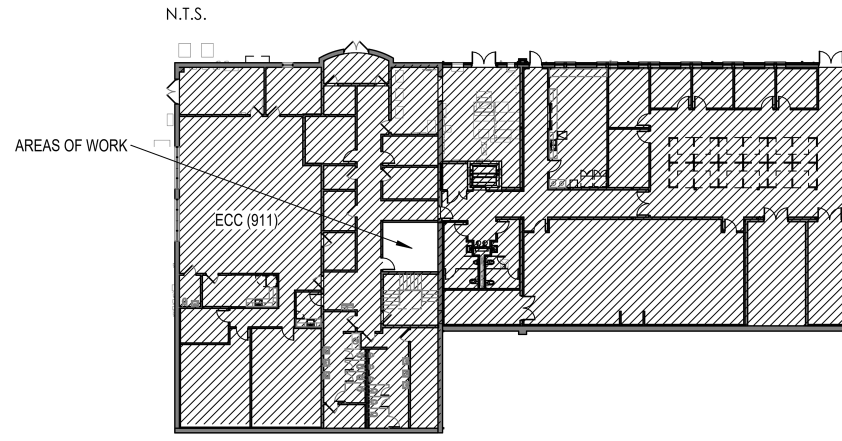

NOTES:
- EXISTING ECC (EMERGENCY 911 CALL CENTER) MUST REMAIN FUNCTIONAL 24/7 THROUGHOUT CONSTRUCTION.
- ACCESS TO AND THROUGH ECC WILL BE EXTREMELY LIMITED DURING CONSTRUCTION. FOOT TRAFFIC AND NOISE MUST BE LIMITED TO THE GREATEST EXTENT POSSIBLE TO PREVENT DISRUPTION OF ECC OPERATIONS. ALL HIGH NOISE ACTIVITIES MUST BE COORDINATED WITH OWNER.
- ECC MUST HAVE 24/7 ACCESS TO TOILET ROOMS AND A FUNCTIONING BREAK ROOM.
- COORDINATE TIME AND DURATION OF TEMPORARY PARTITION CONSTRUCTION WITH THE OWNER AND LIMIT DISRUPTION TO ECC STAFF AND OPERATIONS. AFTER CONSTRUCTION OF TEMPORARY PARTITION, ALL ACCESS BY GC'S PERSONNEL SHALL BE THROUGH DOOR 108. ANY ACCESS TO OR THROUGH ECC SHALL BE COORIDANTED WITH THE OWNER.

LOWER FLOOR PLAN - PHASE 2

N.T.S.

OVERALL PHASING PLANS

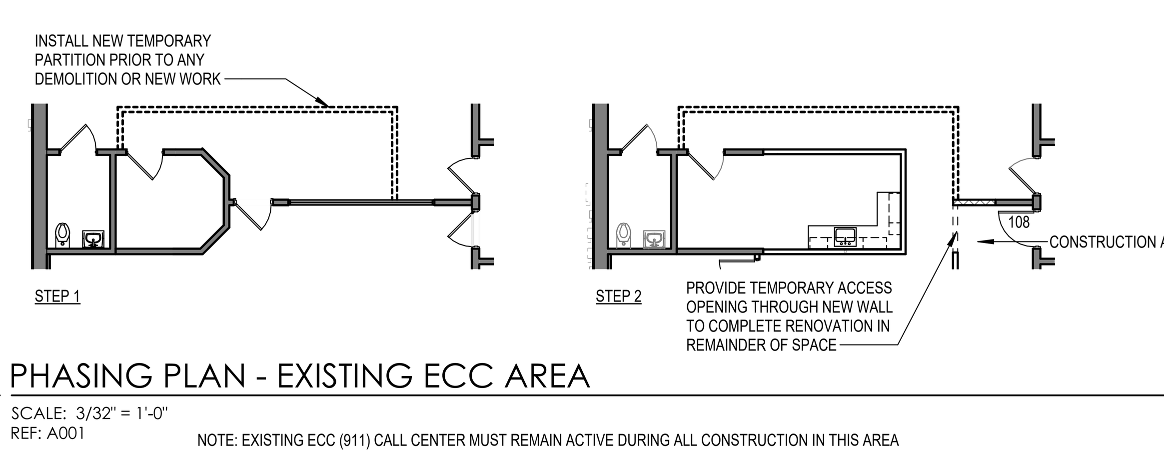

3 PHASING PLAN - EXISTING ECC AREA

A001 SCALE: 3/32" = 1'-0"
REF: A001

NOTE: EXISTING ECC (911) CALL CENTER MUST REMAIN ACTIVE DURING ALL CONSTRUCTION IN THIS AREA

ORIGINAL SIZE : ARCH E1 (30X42) | 5/5/2026 2:59:07 AM
C:\Users\trookstool.SPECTRUM\OneDrive - Spectrum Design PC\Documents\24112 Arch Sheriff R26 Central_trookstool@spectrumpc.com.rvt

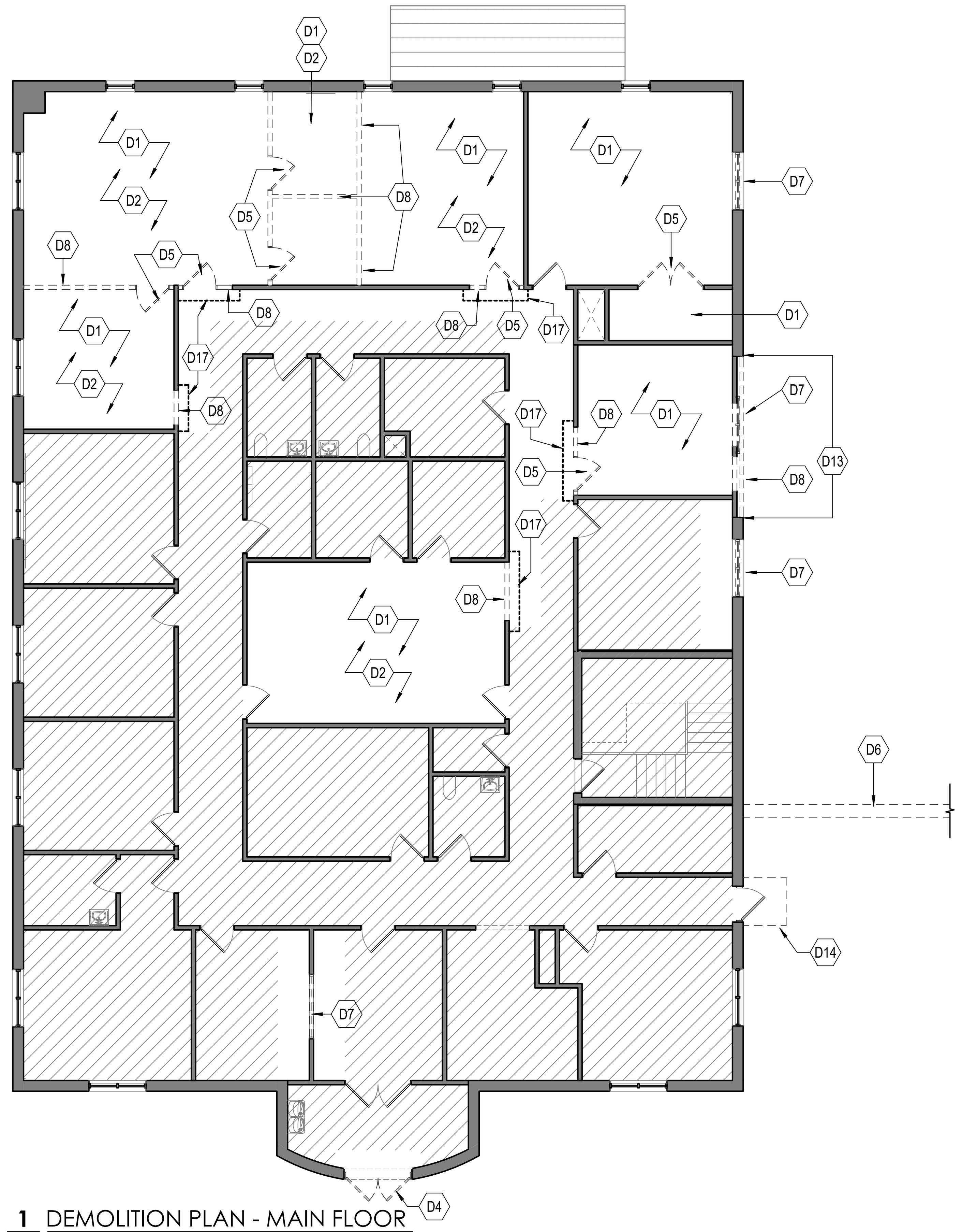

1 DEMOLITION PLAN - MAIN FLOOR

A001 SCALE: 1/8" = 1'-0"
REF: A100

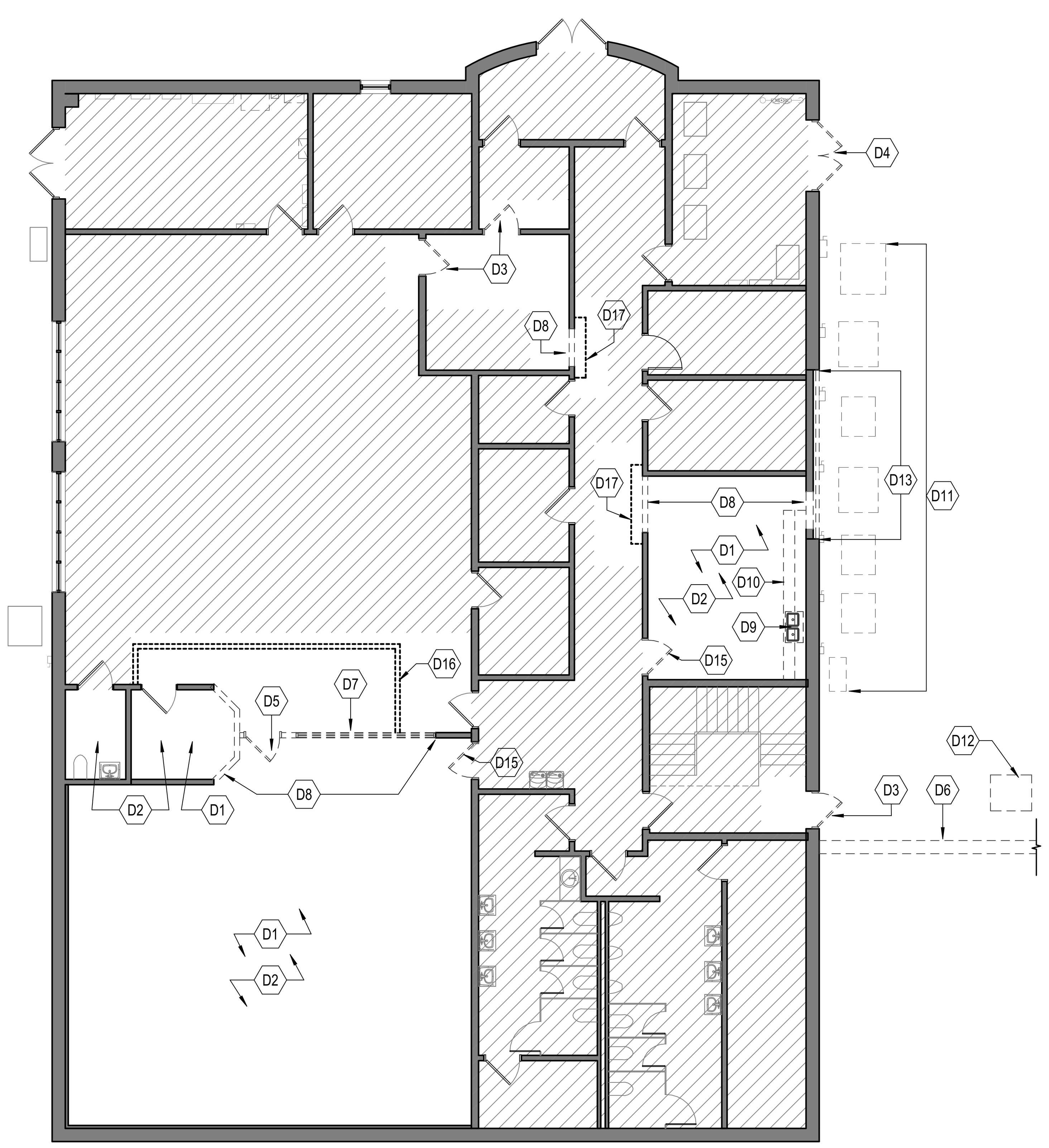

2 DEMOLITION PLAN - LOWER FLOOR

A001 SCALE: 1/8" = 1'-0"
REF: A100

DEMOLITION GENERAL NOTES

GN-1: CONTRACTOR SHALL REMOVE WALLS AND OTHER ELEMENTS SHOWN DASHED IN THEIR ENTIRETY.

GN-2: CONTRACTOR SHALL REMOVE / DISPOSE OF ANY AND ALL DEMOLITION DEBRIS PROPERLY AND IN ITS ENTIRETY TAKING CARE TO KEEP A CLEAN AND SAFE WORKING ENVIRONMENT AT ALL TIMES.

GN-3: CONTRACTOR SHALL ENSURE WORK IS DONE IN A COMPETENT / SAFE MANNER TAKING CARE NOT TO DAMAGE OR DISTURB SURROUNDING SURFACES MORE THAN REQUIRED TO COMPLETE DEMOLITION.

GN-4: CONTRACTOR SHALL REMOVE EXISTING TRIM AS REQUIRED TO COMPLETE WORK IN DESIGNATED AREAS. STORE IN A SAFE, SECURE, DRY AREA UNTIL ITEMS ARE TO BE REINSTALLED.

GN-5: CONTRACTOR SHALL REMOVE EXISTING WALL MOUNTED WINDOW SHADES IN AREAS TO BE DISTURBED BY CONSTRUCTION. STORE IN A SAFE, SECURE, DRY AREA UNTIL ITEMS ARE TO BE REINSTALLED.

GN-6: CONTRACTOR SHALL REPAIR / PREP / PRIME AND PAINT AREAS AND ADJACENT SURFACES DAMAGED OR DISTURBED BY CONSTRUCTION. MATCH ADJACENT WALL COLOR, FINISH AND TEXTURE.

GN-7: CONTRACTOR SHALL TEMPORARILY ENCLOSE / SECURE AREAS IN EXTERIOR WALLS LEFT EXPOSED DUE TO DEMOLITION / CONSTRUCTION. ENCLOSURE(S) SHALL BE CONSTRUCTED IN A MANNER WHICH PROTECTS THE EXISTING BUILDING / STRUCTURE / FINISHES ETC. FROM EXPOSURE TO THE ELEMENTS AND PROVIDES A SECURE BARRIER PREVENTING ENTRY OR THEFT DURING CONSTRUCTION.

GN-8: CONTRACTOR SHALL COORDINATE NEW OPENING SIZES AND LOCATIONS IN EXISTING MASONRY WALLS WITH NEW WORK. NEW OPENINGS ARE TO BE SAW-CUT, AND NEW SOLID MASONRY UNITS ARE TO INSTALLED TO REPLACE CUT MASONRY UNITS IN PORTIONS OF WALLS TO REMAIN AT NEW OPENING JAMBS. NEW SOLID MASONRY UNITS ARE TO HAVE A 4" MINIMUM DIMENSION FROM THE JAMB, AND ARE TO BE TOOTHED IN AND MATCH THE EXISTING MASONRY BOND PATTERN AND HEAD JOINT ALIGNMENT. PROVIDE BULLNOSED MASONRY UNITS AS REQUIRED. (TYPICAL)

Dx DEMOLITION KEYNOTES

D1	REMOVE EXISTING FLOORING
D2	REMOVE EXISTING CEILING
D3	REMOVE EXISTING DOOR; TO BE INFILLED
D4	REMOVE EXISTING DOOR LEAFSAND HARDWARE; FRAMED OPENING TO REMAIN
D5	REMOVE EXISTING DOOR
D6	REMOVE EXISTING RETAINING WALL - SEE CIVIL FOR EXTENTS
D7	REMOVE EXISTING WINDOW
D8	REMOVE EXISTING WALL
D9	REMOVE EXISTING PLUMBING FIXTURE. CAP SUPPLY AND DRAIN LINES BELOW FINISH FLOOR OR BEHIND FINISH SURFACES
D10	REMOVE EXISTING CASEWORK
D11	RELOCATE EXISTING MECHANICAL EQUIPMENT. SEE MECHANICAL DRAWINGS FOR NEW LOCATION.
D12	REMOVE EXISTING ELECTRICAL EQUIPMENT. SEE ELECTRICAL DRAWINGS FOR PHASING.
D13	REMOVE EXISTING BRICK VENEER FULL HEIGHT IN AREA OF NEW CORRIDOR. EXISTING LOAD BEARING WALL TO REMAIN
D14	REMOVE EXISTING CANOPY. PATCH AND REPAIR HOLES IN EXISTING BUILDING FACE
D15	REMOVE EXISTING DOOR - FRAME TO REMAIN
D16	INSTALL TEMPORARY HARD PARTITION PRIOR TO ANY DEMOLITION WORK IN THIS AREA
D17	INSTALL TEMPORARY SOFT PARTITION PRIOR TO ANY DEMOLITION WORK IN THIS AREA

DEMOLITION OF HAZARDOUS MATERIALS

AN ASBESTOS INSPECTION WAS NOT PERFORMED BECAUSE ALL PORTIONS OF THE EXISTING BUILDING THAT MAY BE AFFECTED BY THE WORK WERE ORIGINALLY CONSTRUCTED AFTER JANUARY 1, 1985.

AN INSPECTION TO IDENTIFY LEAD CONTAINING OR COATED BUILDING COMPONENTS HAS NOT BEEN CONDUCTED BECAUSE THE BUILDING WAS CONSTRUCTED AFTER JANUARY 1, 1985 AND THE OWNER HAS NO KNOWLEDGE OF LEAD CONTAINING OR COATED BUILDING COMPONENTS IN THE BUILDING. IT IS THE CONTRACTOR'S RESPONSIBILITY TO COMPLY WITH ALL VIRGINIA OCCUPATIONAL SAFETY AND HEALTH (VOSH) REGULATIONS AS THEY PERTAIN TO EMPLOYEE EXPOSURES TO LEAD. ALL LEAD AND LEAD-COATED BUILDING COMPONENTS SHALL BE RECYCLED TO THE EXTENT POSSIBLE.

DEMOLITION LEGEND

- EXISTING WALLS TO REMAIN
- EXISTING WALLS TO BE REMOVED
- EXISTING MISCELLANEOUS ITEMS TO BE REMOVED
- EXISTING DOOR TO BE REMAIN
- EXISTING DOOR TO BE REMOVED

ACCESSIBLE CHANGES IN FLOOR FINISH LEVEL

ANSI 117.1 2017 / ADASAD 2010 SECTION 302 & 303 REQUIREMENTS

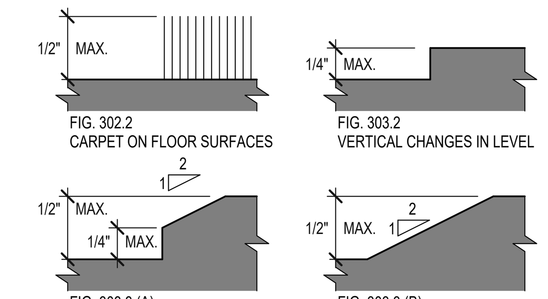

0 4' 8' 16'
SCALE: 1/8" = 1' - 0"

SYMBOLS LEGEND

- VIEW TITLE: 00 VIEW TITLE — VIEW NUMBER; M000 SCALE: 1/8" = 1'-0" — DRAWING SCALE; REF: R101 — SHEET REFERENCE
- SECTION TAG: DRAWING NUMBER; SIM; SHEET NUMBER WHERE TAKEN; SHEET NUMBER WHERE DRAWN (1 / A101)
- ENLARGED DETAIL: DRAWING NUMBER; SIM; SHEET NUMBER WHERE TAKEN; SHEET NUMBER WHERE DRAWN (1 / A101)
- EXTERIOR ELEVATION TAG: SIM; DRAWING NUMBER; SHEET NUMBER WHERE TAKEN; SHEET NUMBER WHERE DRAWN (1 / A101)
- INTERIOR ELEVATION TAG: 5F/ A101 — DRAWING / SHEET NUMBER
- ROOM TAG: SPACE NAME; 101 — ROOM NUMBER
- LIFE SAFETY TAG: SPACE NAME; 1200 SF — ROOM AREA; 1 : 200 — OCCUPANT PER SF RATIO; 200 | 200 — ACTUAL SEATS (IF APPLICABLE); CALCULATED OCCUPANCY
- PARTITION TAG: A2B1 — FIRE RATING (HOURS); PARTITION STRUCTURE; PARTITION STRUCTURE SIZE (NOMINAL); PARTITION TYPE (SCHEDULE)
- DOOR NUMBER: 101A
- EGRESS TAGS: 66" 330 | 200 0.2"/" — ALLOWABLE EGRESS CAPACITY OF OPENING; ACTUAL EGRESS LOAD OF OPENING; 0 — CUMULATIVE EGRESS LOAD ALONG PATH
- STOREFRONT / WINDOW / CURTAINWALL FRAMING: SF XX.X — FRAME TYPE; FRAME NO.; XX" — FRAME DEPTH
- GLASS TYPE: GL-#
- COLUMN GRID LINE NEW CONSTRUCTION: 1, A — DESIGNATOR
- CASEWORK TAG: 000 M* — NAAWS CABINET DESIGN SERIES NUMBER; 00 W. — CASEWORK WIDTH **; 00 H. — NOMINAL CASEWORK HEIGHT (TOP OF COUNTERTOP IF BASE CABINET); 00 D. — NOMINAL CASEWORK DEPTH (REAR OF CABINET TO FACE OF CABINET DOOR); X/AXXX — MODIFICATION DETAIL OR DESCRIPTION
  - * "M" = MODIFIED
  - ** "V" = VARIES, MATCH WIDTH OF ADJACENT CASEWORK BELOW
- KEYNOTE: XX
- DEMOLITION NOTE: D1
- LOUVER TYPE: L#
- TOILET ACCESSORIES: TA1
- EQUIPMENT NUMBER: EQ1
- REVISION NUMBER: #
- NORTH DIRECTION: N — NORTH
- CENTERLINE: ℄
- FINISH TRANSISTION: FIN FIN
- LIMITS OF CONSTRUCTION: L.O.C.
- STAIR DIRECTION: UP / DN
- BREAKLINE
- SPOT ELEVATION: 1226'-0"
- BENCHMARK ELEVATION: XXX LEVEL XX' - XX"

XX KEYNOTE INDICATOR

A - ARCHITECTURAL / GENERAL	M - MECHANICAL
C - CIVIL	P - PLUMBING
E - ELECTRICAL	R - ROOF
D - DEMOLITION	S - STRUCTURAL
F - FINISHES / FURNITURE	W - WALLS
G - GLAZING / DOORS	X - EXISTING
LS - LIFE SAFETY	

NOTES:
1. INDICATOR LETTER IS USED FOR KEYNOTE ORGANIZATION ONLY AND IS NOT INTENDED TO ASSIGN OR EXCLUDE WORK AND/OR COORDINATION TO OR FROM SPECIFIC TRADES OR DISCIPLINES.
2. KEYNOTES ARE TYPICALLY ASSOCIATED WITH A DRAWING SERIES. KEYNOTE NUMBERS MAY VARY FROM SERIES TO SERIES. SOME KEYNOTES MAY APPEAR IN A SHEET'S LEGEND, BUT NOT APPEAR IN A DRAWING ON THAT SPECIFIC SHEET.

ARCHITECTURAL ABBREVIATIONS

AB	ANCHOR BOLT
ABV	ABOVE
AC	ACCESS CONTROL
ACM	ASBESTOS CONTAINING MATERIAL
ACP	ACOUSTICAL CEILING PANEL
AED	AUTOMATED EXTERNAL DEFIBRILLATOR
AFF	ABOVE FINISH FLOOR
ALT	ALTERNATE
ALUM	ALUMINUM
AO	AUTOMATIC OPERATOR
ARA	AREA OF RESCUE ASSISTANCE COMMUNICATION DEVICE
ARCH	ARCHITECTURAL
BD	BOARD
BLDG	BUILDING
BLKG	BLOCKING
BOT	BOTTOM
BRG	BEARING
CI	CONTINUOUS INSULATION
CJ	CONTROL JOINT
CLG	CEILING
CMU	CONCRETE MASONRY UNIT
CONC	CONCRETE
CONF	CONFERENCE
CONT	CONTINUOUS
CONTR	CONTRACTOR
CW	CASEWORK
DIA	DIAMETER
DS	DOWNSPOUT
EA	EACH
EB	EXPANSION BOLT
EF	EACH FACE
EJ	EXPANSION JOINT
EL	ELEVATION
ELEC	ELECTRICAL
ELEV	ELEVATION
ELEV	ELEVATOR
EQ	EQUAL
EQUIP	EQUIPMENT
EW	EACH WAY
EXIST	EXISTING
EXT	EXTERIOR
FE	FIRE EXTINGUISHER
FEC	FIRE EXTINGUISHER AND CABINET
FLR	FLOOR
FRT	FIRE RETARDANT TREATED
FSM	FLEXIBLE SHEET MEMBRANE ROOFING
FTG	FOOTING
GALV	GALVANIZED
GN	GENERAL NOTE
GYB	GYPSUM WALL BOARD
GYP	GYPSUM WALL BOARD
HDWRE	HARDWARE
HGT	HEIGHT
HIPAC	HIGH PERFORMANCE ARCH COATING
HP	HIGH POINT
HR	HOUR
ID	INSIDE DIAMETER
INT	INTERIOR
ISOL	ISOLATION
JAN	JANITOR
JT	JOINT
LLH	LONG LEG HORIZONTAL
LLV	LONG LEG VERTICAL
LOC	LIMITS OF CONSTRUCTION
LP	LOW POINT
MACH	MACHINE
MAINT	MAINTENANCE
MATL	MATERIAL
MCM	METAL COMPOSITE MATERIAL
MCM	METAL COMPOSITE MATERIAL
MECH	MECHANICAL
MO	MASONRY OPENING
MTL	METAL
NA	NOT APPLICABLE
NIC	NOT IN CONTRACT
NTS	NOT TO SCALE
OC	ON CENTER
OD	OUTSIDE DIAMETER
OH	OPPOSITE HAND
OHD	OVERHEAD DOOR
OS	OVERFLOW SCUPPER
PLAM	PLASTIC LAMINATE
PLUMB	PLUMBING
PNT	PAINT
PR	PAIR
PT	PRESERVATIVE TREATED
R	RADIUS
RCP	REFLECTED CEILING PLAN
RD	ROOF DRAIN
RE	REFER
RECPT	RECEPTION
REF	REFER TO
REINF	REINFORCEMENT
REV	REVERSED
RM	ROOM
RO	ROUGH OPENING
SCHED	SCHEDULE
SFRM	SPRAY APPLIED FIRE RESISTIVE MATERIAL
SHT	SHEET
SPEC	SPECIFICATION
SS	STAINLESS STEEL
STL	STEEL
STOR	STORAGE
STRUCT	STRUCTURAL
THRESH	THRESHOLD
TLT	TOILET
TOJ	TOP OF JOIST
TOS	TOP OF STEEL
TOW	TOP OF WALL
TYP	TYPICAL
UNO	UNLESS NOTED OTHERWISE
UR	URINAL
VEST	VESTIBULE
W/	WITH
W/O	WITHOUT
WC	WATER CLOSET
WD	WOOD
WHL CHR	WHEELCHAIR
°	DEGREE
±	PLUS / MINUS
Ø	DIAMETER
≤	LESS THAN OR EQUAL TO
≥	GREATER THAN OR EQUAL TO
•	BULLET POINT

ARCHITECTURAL MATERIALS

EARTH	FINISH WOOD
POROUS FILL (STONE OR GRAVEL)	CAST-IN-PLACE CONCRETE
BRICK	CONCRETE MASONRY UNITS
BRICK VENEER (ELEVATIONS)	CMU VENEER (ELEVATIONS)
STEEL	ALUMINUM
PLYWOOD	RIGID INSULATION
BATT INSULATION	GYPSUM WALL BOARD
	WOOD BLOCKING

**NOTE: THESE ARE STANDARD SYMBOLS - ALL SYMBOLS NOTED ON THIS SHEET MAY NOT APPLY.

SPECTRUM DESIGN
architects | engineers

Plaza Suite 1
10 Church Avenue, SE
Roanoke, VA 24011

540.342.6001
spectrumpc.com

BEDFORD COUNTY SHERIFF'S OFFICE EXPANSION

SPECTRUM DESIGN PROJECT NO.: **24112**

COMMONWEALTH OF VIRGINIA
TRAVIS ROOKSTOOL
Lic. No. 17288
05.04.2026
ARCHITECT

PROJ. MGR.: **JM** CHECKED BY: **GEG** DRAWN BY: **TLR, MIG**

SHEET ISSUE DATE:
05.04.2026

PROJECT PHASE:
BID DOCUMENTS

SHEET REVISIONS:

PLAN NORTH — SITE NORTH

SHEET NAME:
GENERAL ARCHITECTURAL INFORMATION & DEMOLITION PLAN

SHEET NUMBER:
A001

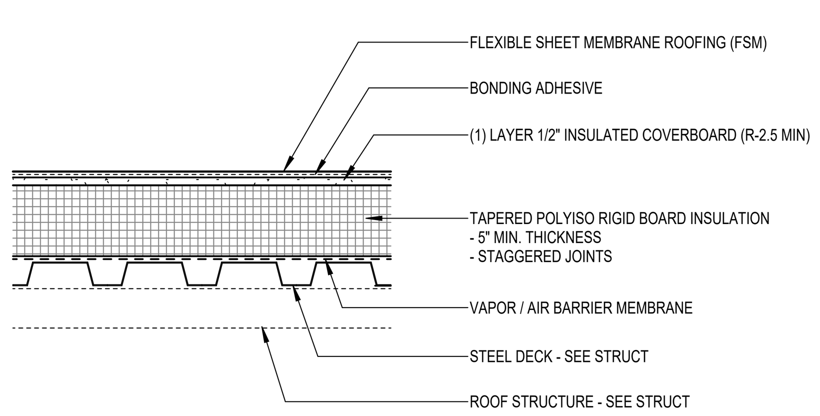

RA-1 ROOF ASSEMBLY (R-30 CI MIN.)

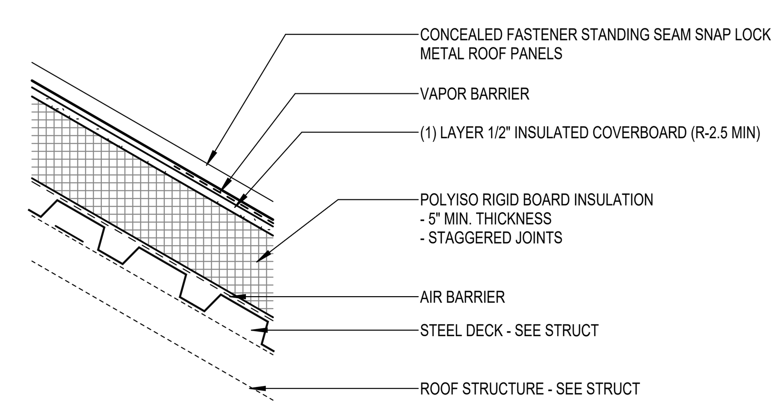

RA-2 ROOF ASSEMBLY (R-30 CI MIN.)

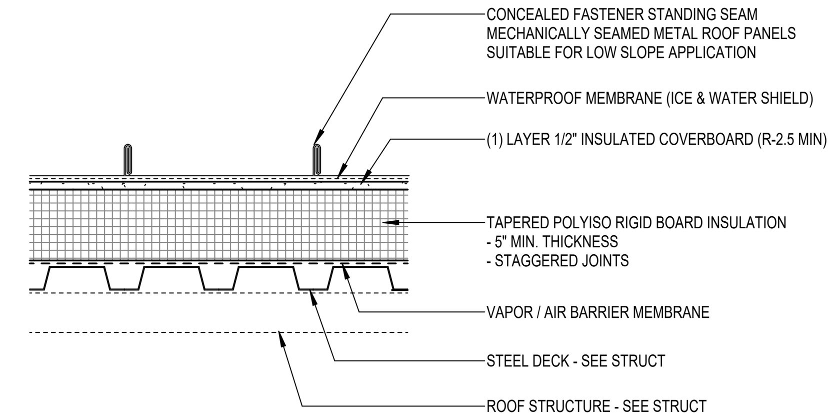

RA-3 ROOF ASSEMBLY (R-30 CI MIN.)

PARTITION, WALL, & ASSEMBLY TYPES GENERAL NOTES

GN-1. FOR NEW CONSTRUCTION, PLAN DIMENSIONS ARE TO FACE OF METAL OR WOOD FRAMING MEMBERS, FACE OF MASONRY, AND CENTERLINE OF COLUMNS U.N.O. FOR EXISTING CONSTRUCTION, PLAN DIMENSIONS ARE TO FACE OF FINISH OF EXISTING WALLS U.N.O. "CLEAR" DIMENSIONS ARE TO FACE OF FINISH (GWB, TILE, ETC).

GN-2. REFER TO FINISH SCHEDULES AND ELEVATIONS FOR APPLIED FINISHES NOT INDICATED IN WALL TYPES.

GN-2. WHERE TILE OCCURS AT STUDS AND FURRING, PROVIDE 5/8" GLASS FACED GWB IN LIEU OF PAPER FACED GWB. AT SHOWERS PROVIDE VAPOR BARRIER BEHIND TILE.

GN-3. PROVIDE 1" BULLNOSE AT ALL EXPOSED OUTSIDE CORNERS OF CMU WALLS.

GN-4. PROVIDE DEFLECTION TRACKS OR CLIPS FOR ALL PARTITIONS ABUTTING STRUCTURE AND DECK ABOVE.

GN-5. ALL FIRE RATED WALLS AND PARTITIONS SHALL BE BUILT IN STRICT CONFORMANCE WITH A UL-LISTED ASSEMBLY OR OTHER TESTED ASSEMBLY WHICH PROVIDES THE INDICATED FIRE RATING. UL ASSEMBLIES INDICATED ESTABLISH A BASIS OF PERFORMANCE. OTHER ASSEMBLIES MAY BE CONSIDERED AT THE SOLE DISCRETION OF THE ARCHITECT IF EQUIVALENT PERFORMANCE IS PROVIDED. SUBSTITUTION PROPOSALS SHALL INCLUDE CHANGES REQUIRED TO ALL COMPONENTS OF THE ASSEMBLY.

GN-6. PROVIDE A UL-LISTED AND APPROVED HEAD ASSEMBLY FOR RATED WALLS AND PARTITIONS THAT PROVIDES AN EQUAL OR GREATER FIRE RATING TO THAT OF THE FIRE RATED WALL OR PARTITION.

GN-7. FIRE-RESISTANCE ASSEMBLY MARKING (SECTION 703.7): WHERE THERE IS A CONCEALED FLOOR, FLOOR-CEILING, OR ATTIC SPACE, THE FIRE WALLS, FIRE BARRIERS, FIRE PARTITIONS, SMOKE BARRIERS OR ANY OTHER ASSEMBLY REQUIRED TO HAVE PROTECTED OPENINGS OR PENETRATIONS SHALL BE DESIGNATED ABOVE CEILINGS AND ON THE INSIDE OF ALL CEILING ACCESS DOORS THAT PROVIDE ACCESS TO SUCH FIRE RATED ASSEMBLIES BY SIGNAGE HAVING LETTERS NO SMALLER THAN ONE INCH IN HEIGHT. SUCH SIGNAGE SHALL INDICATE THE FIRE RESISTANCE RATING OF THE ASSEMBLY AND THE TYPE OF ASSEMBLY AND BE PROVIDED AT HORIZONTAL INTERVALS OF NO MORE THAN EIGHT FEET. AN EXAMPLE OF SUGGESTED FORMATTING FOR THE SIGNAGE WOULD BE "ONE HOUR FIRE PARTITION."

EXTERIOR WALLS & INTERIOR PARTITIONS X#A#
WALL/PARTITION TYPE (X = SCHEDULE)
STRUCTURE WIDTH (# = NOMINAL)
SUBCATEGORY / TERMINATION INDICATOR
FIRE RATING (# = HOURS)

FLOOR ASSEMBLIES (FA-)
ROOF ASSEMBLIES (RA-) XA-1
ASSEMBLY TYPE (# = TYPE)

STRUCTURE WIDTH LEGEND

NOMINAL WIDTH	METAL STUD / FURRING	BRICK / CMU	CONCRETE	WOOD
1	7/8"	--	--	3/4"
2	1 5/8"	--	--	1 1/2"
3	2 1/2"	--	--	2 1/2"
4	3 5/8"	3 5/8"	4"	3 1/2"
6	6"	5 5/8"	6"	5 1/2"
8	8"	7 5/8"	8"	7 1/4"
10	10"	9 5/8"	10"	9 1/4"
12	12"	11 5/8"	12"	11 1/4"

XX SHEET KEYNOTES

W91 COURSE OUT TOP OF CMU WALL AT OR ABOVE TOP OF RATED HORIZONTAL SHAFTWALL FOR CONTINUOUS FIRE RATING

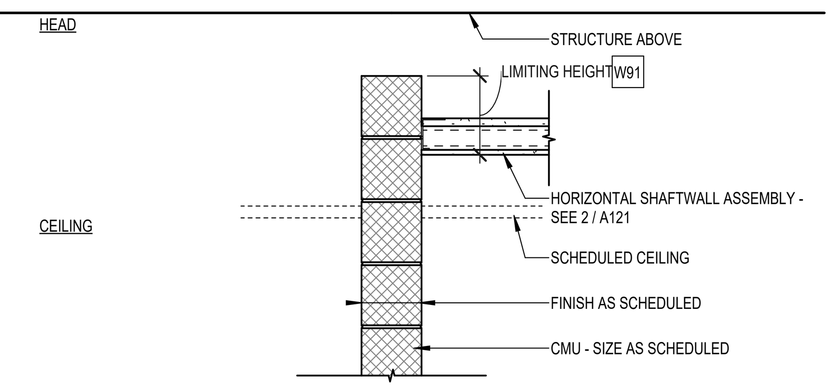

MxH TERMINATION DETAIL

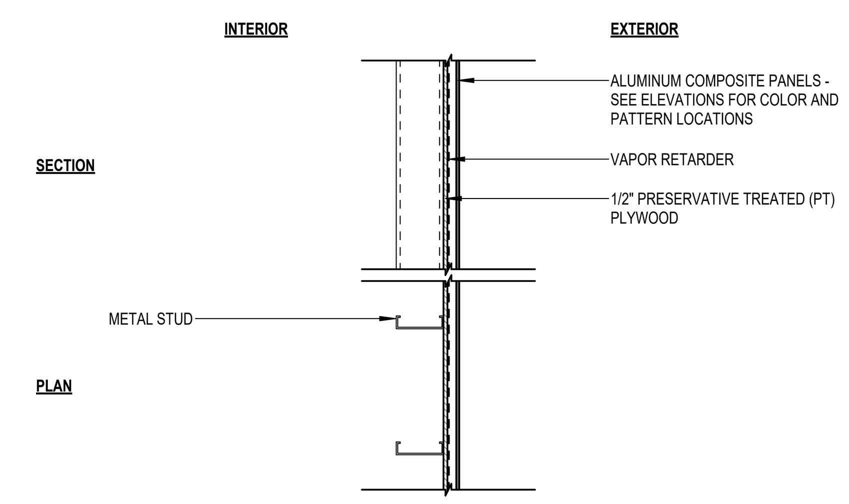

P METAL STUD WALL W/ ALUMINUM COMPOSITE PANEL

ASSEMBLY TAG	TOTAL WIDTH	STRUCT. WIDTH	MIN. GAUGE	MAX. SPACING	INSUL. WIDTH	VENEER WIDTH	UL NO.	FIRE RATING	NOTES
P4A	5 5/8"	3 5/8"	20	16"	--	--	--	--	--

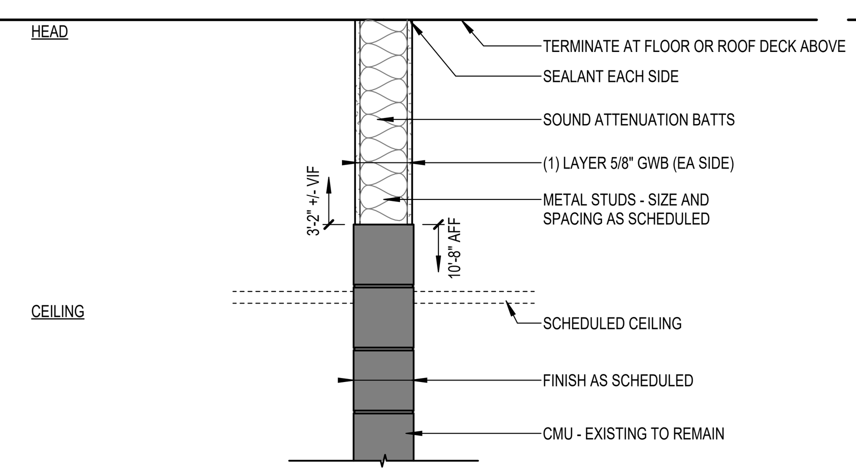

GxE TERMINATION DETAIL

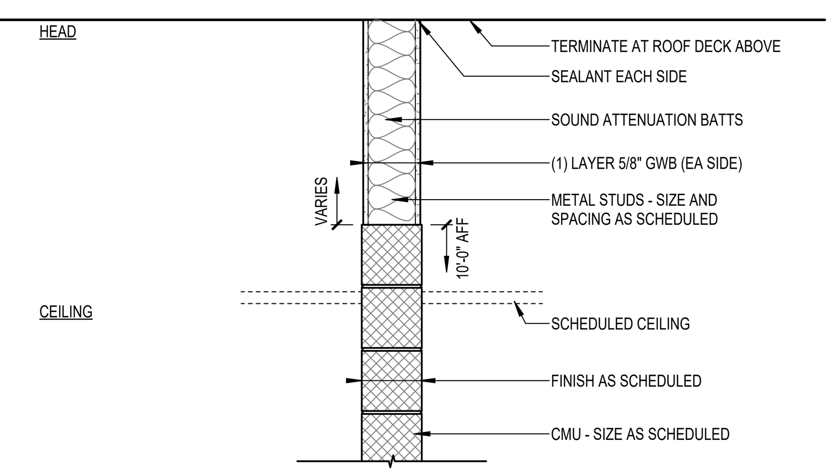

MxE TERMINATION DETAIL

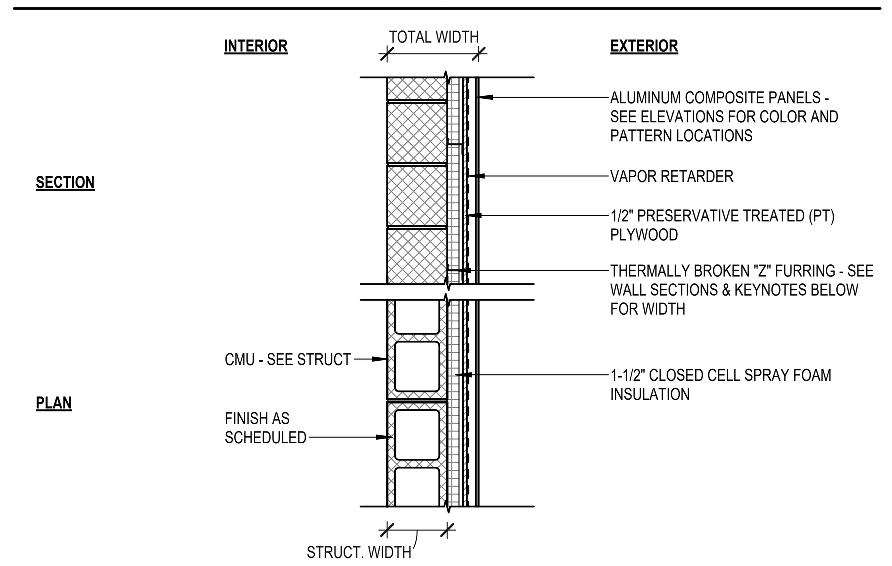

TBD CMU WALL W/ ALUMINUM COMPOSITE PANEL

ASSEMBLY TAG	TOTAL WIDTH	STRUCT. WIDTH	MIN. GAUGE	MAX. SPACING	INSUL. WIDTH	"Z" CLIP WIDTH	UL NO.	FIRE RATING	NOTES
R8A	11 5/8"	7 5/8			1 1/2"	2"	--	--	--

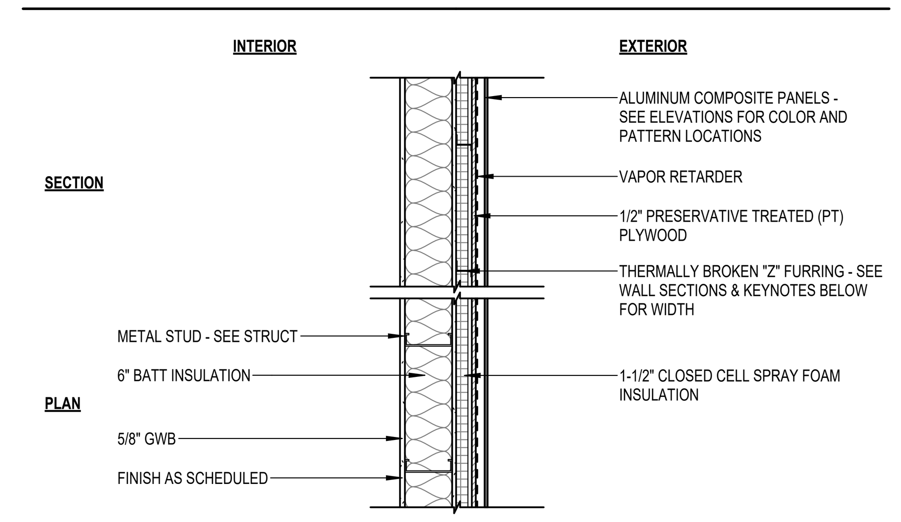

S METAL STUD WALL W/ ALUMINUM COMPOSITE PANEL

ASSEMBLY TAG	TOTAL WIDTH	STRUCT. WIDTH	MIN. GAUGE	MAX. SPACING	INSUL. WIDTH	"Z" CLIP WIDTH	UL NO.	FIRE RATING	NOTES
S6A	11 1/4"	6"	20	16"	1 1/2"	2"	--	--	--

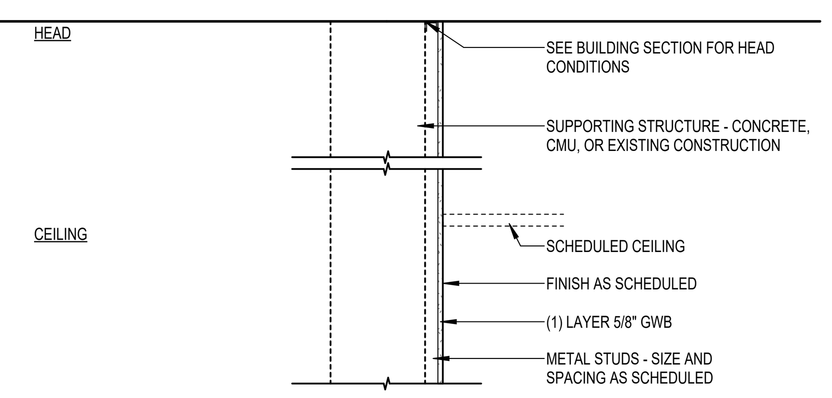

FxD TERMINATION DETAIL

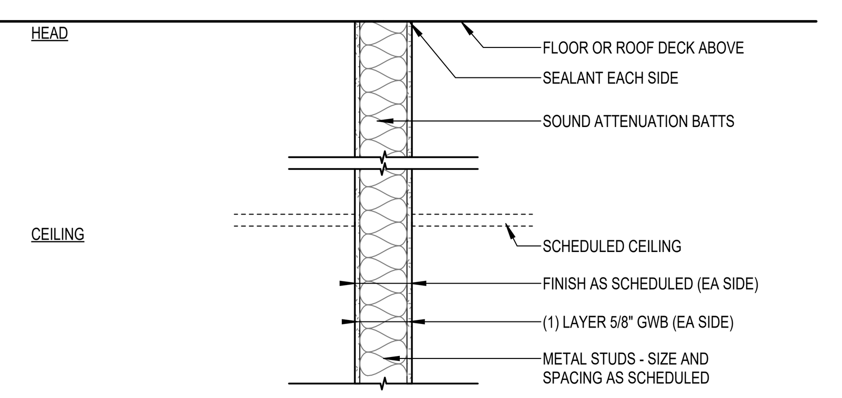

GxD TERMINATION DETAIL

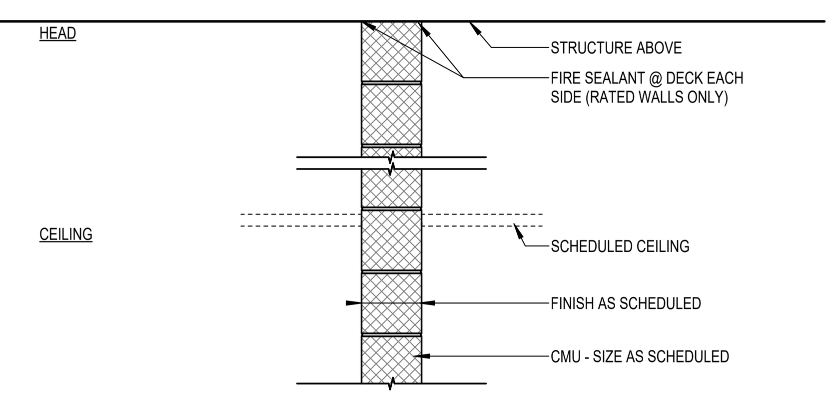

MxD TERMINATION DETAIL

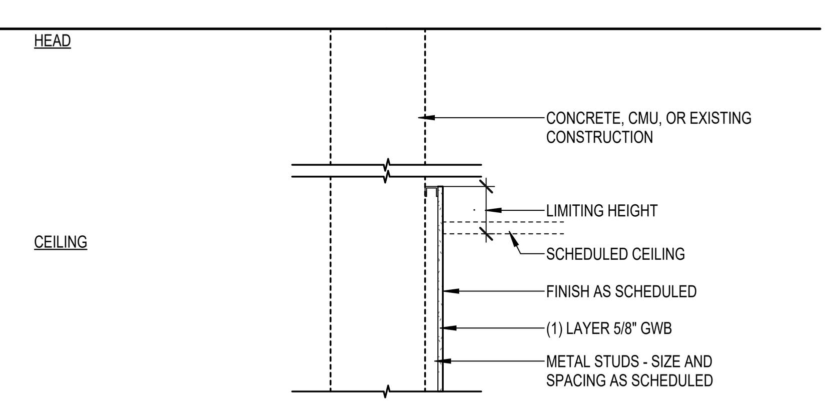

FxA TERMINATION DETAIL

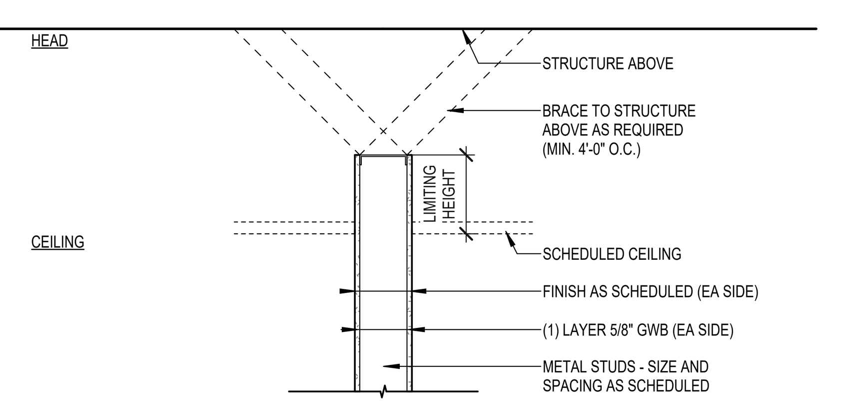

GxA TERMINATION DETAIL

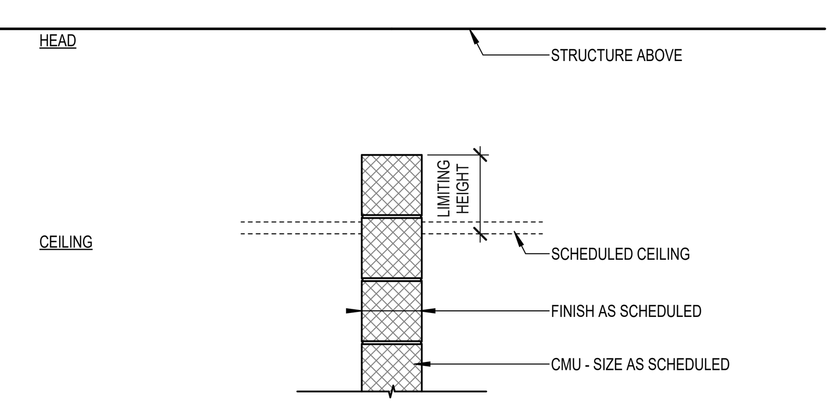

MxA TERMINATION DETAIL

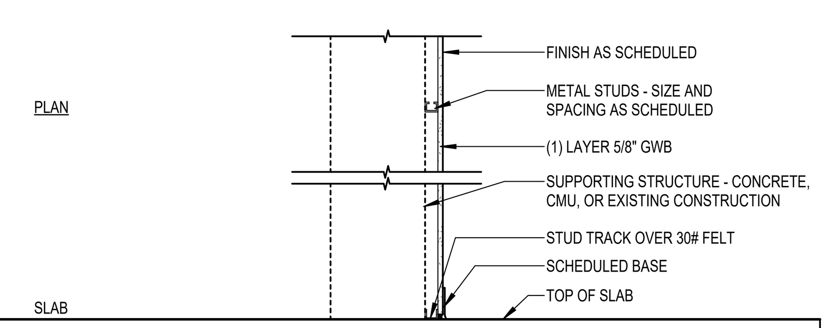

F PARTITION TYPE

ASSEMBLY TAG	TOTAL WIDTH	STRUCT. WIDTH	MIN. GAUGE	MAX. SPACING	LIMITING HEIGHT	UL NO.	FIRE RATING	TERM. DETAIL	STC RATING	STC TEST	KEYNOTES
F1A	1 1/2"	7/8"	20	16"	MIN. 6" ABV CLG	--	--	FxA			--
F4A	4 1/4"	3 5/8"	20	16"	MIN. 6" ABV CLG	--	--	FxA			--
F4D	4 1/4"	3 5/8"	20	16"	--	--	--	FxD			--
F6A	6 5/8"	6"	20	16"	MIN. 6" ABV CLG	--	--	FxA			--

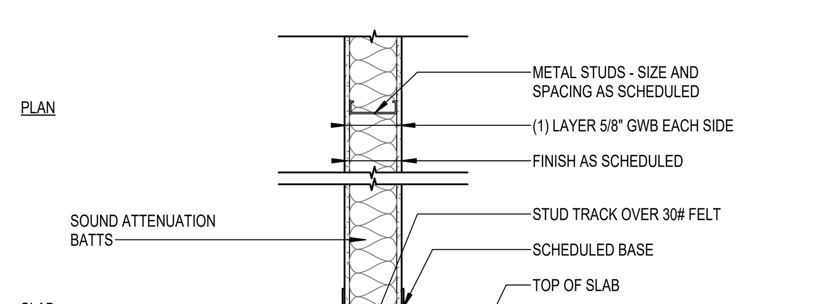

G PARTITION TYPE

ASSEMBLY TAG	TOTAL WIDTH	STRUCT. WIDTH	MIN. GAUGE	MAX. SPACING	LIMITING HEIGHT	UL NO.	FIRE RATING	TERM. DETAIL	STC RATING	STC TEST	KEYNOTES
G4A	4 7/8"	3 5/8"	20	16"	MIN. 6" ABV CLG	--	--	GxA			--
G4D	4 7/8"	3 5/8"	20	16"	--	--	--	GxD			--
G4E	4 7/8"	3 5/8"	20	16"	--	--	--	GxE			--
G6A	7 1/4"	6"	20	16"	--	--	--	GxA			--
G6D	7 1/4"	6"	20	16"	--	--	--	GxD			--

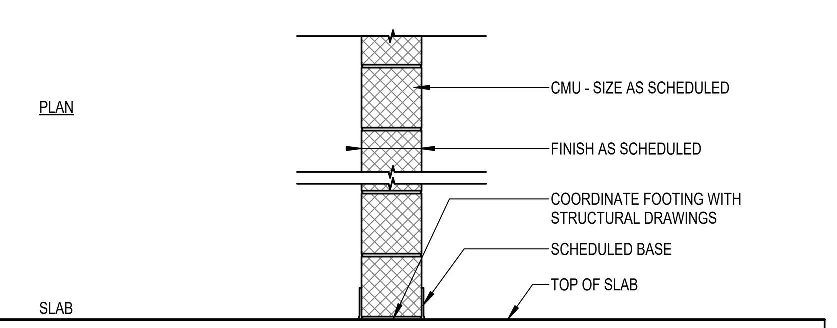

M PARTITION TYPE

ASSEMBLY TAG	TOTAL WIDTH	STRUCT. WIDTH	MIN. GAUGE	MAX. SPACING	LIMITING HEIGHT	UL NO.	FIRE RATING	TERM. DETAIL	STC RATING	STC TEST	KEYNOTES
M4A	3 5/8"	--	--	--	MIN. 6" ABV CLG	--	--	MxA			--
M6D	5 5/8"	--	--	--	--	--	--	MxD			--
M8A	7 5/8"	--	--	--	MIN. 6" ABV CLG	--	--	MxA			--
M8D	7 5/8"	--	--	--	--	--	--	MxD			--
M8D1	7 5/8"	--	--	--	--	U906	1 HR	MxD			--
M8E	7 5/8"	6"	20	16"	--	--	--	MxE			--
M8H1	7 5/8"	--	--	--	SEE KEYNOTE	U906	1 HR	MxH			W91

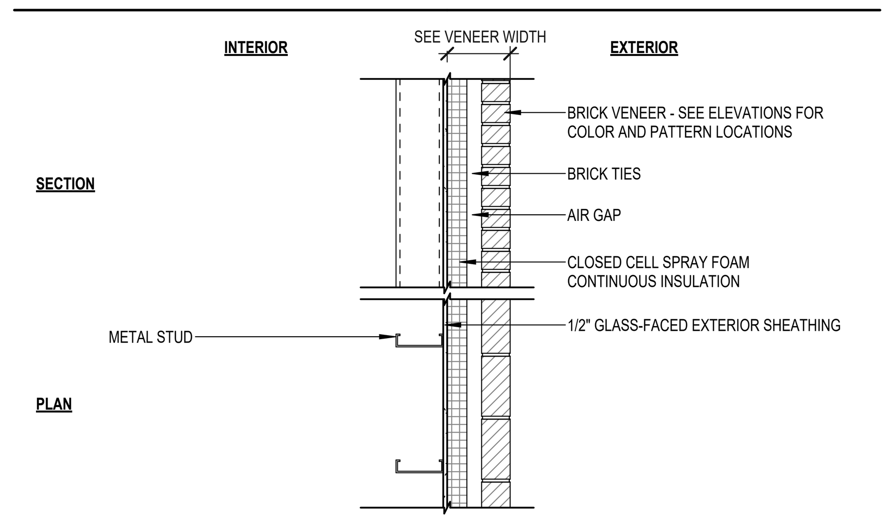

T METAL STUD WALL W/ BRICK VENEER

ASSEMBLY TAG	TOTAL WIDTH	STRUCT. WIDTH	MIN. GAUGE	MAX. SPACING	INSUL. WIDTH	VENEER WIDTH	UL NO.	FIRE RATING	NOTES
T1B	1' - 1 1/4"	6"	20	16"	1 1/2"	10 3/4"	--	--	ALIGN BRICK WITH PILASTER
T2B	1' - 0 7/8"	6"	20	16"	1 1/2"	6 3/8"	--	--	ALIGN BRICK WITH PILASTER

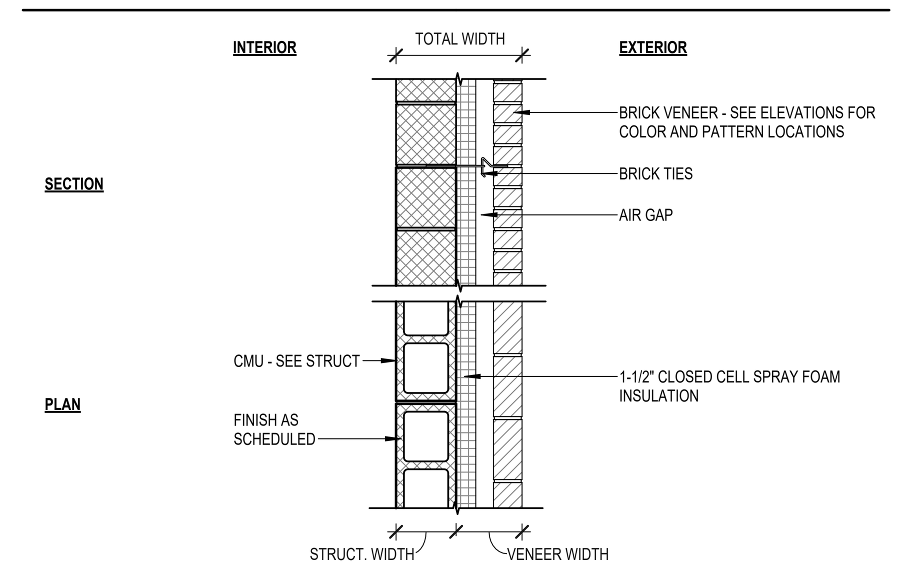

V CMU WALL W/ BRICK VENEER

ASSEMBLY TAG	TOTAL WIDTH	STRUCT. WIDTH	MIN. GAUGE	MAX. SPACING	INSUL. WIDTH	VENEER WIDTH	UL NO.	FIRE RATING	NOTES
V8A	1' - 2"	7 5/8"	--	--	1 1/2"	6 3/8"	--	--	--

0 1' 2' 4'
SCALE: 3/4" = 1' - 0"

SPECTRUM DESIGN
architects | engineers

Plaza Suite 1
10 Church Avenue, SE
Roanoke, VA 24011
540.342.6001
spectrumpc.com

BEDFORD COUNTY SHERIFF'S OFFICE EXPANSION

SPECTRUM DESIGN PROJECT NO.: **24112**

COMMONWEALTH OF VIRGINIA
TRAVIS ROOKSTOOL
Lic. No. 17288
05.04.2026
ARCHITECT

PROJ. MGR.: **JM** CHECKED BY: **GEG** DRAWN BY: **TLR, MIG**

SHEET ISSUE DATE: **05.04.2026**

PROJECT PHASE: **BID DOCUMENTS**

SHEET REVISIONS:

SHEET NAME:
PARTITION TYPES, EXTERIOR WALL & ROOF ASSEMBLIES

SHEET NUMBER:
A002

ORIGINAL SIZE : ARCH E1 (30X42) | 5/5/2026 2:59:16 AM
C:\Users\trookstool.SPECTRUM\OneDrive - Spectrum Design PC\Documents\24112 Arch Sheriff R26 Central_trookstool@spectrumpc.com.rvt

DESIGN NO. U415

SEPTEMBER 27, 2018

NONBEARING WALL RATINGS — 1, 2, 3 OR 4 HR
* INDICATES SUCH PRODUCTS SHALL BEAR THE UL OR CUL CERTIFICATION MARK FOR JURISDICTIONS EMPLOYING THE UL OR CUL CERTIFICATION (SUCH AS CANADA), RESPECTIVELY.

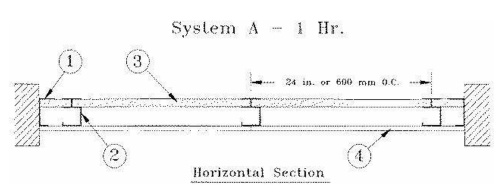

1. FLOOR, SIDE AND CEILING RUNNERS — "J" - SHAPED RUNNER, MIN 2-1/2 IN. DEEP (MIN 4 IN. DEEP WHEN SYSTEM C IS USED), WITH UNEQUAL LEGS OF 1 IN. AND 2 IN., FABRICATED FROM MIN 24 MSG (MIN 20 MSG WHEN ITEM 4A, 4B, 4C, 4D OR 7 ARE USED) GALV STEEL. RUNNERS POSITIONED WITH SHORT LEG TOWARD FINISHED SIDE OF WALL. RUNNERS ATTACHED TO STRUCTURAL SUPPORTS WITH STEEL FASTENERS LOCATED NOT GREATER THAN 2 IN. FROM ENDS AND NOT GREATER THAN 24 IN. OC. "E" - SHAPED STUDS (ITEM 2A) MAY BE USED AS SIDE RUNNERS IN PLACE OF "J" - SHAPED RUNNERS.

2. STEEL STUDS — "C-H" - SHAPED STUDS, MIN 2-1/2 IN. DEEP (MIN 4 IN. DEEP WHEN SYSTEM C IS USED), FABRICATED FROM MIN 25 MSG (MIN 20 MSG WHEN ITEMS 2D, 4A, 4B, 4C, 4D OR 7 IS USED) GALV STEEL. CUT TO LENGTHS 3/8 TO 1/2 IN. LESS THAN FLOOR-TO-CEILING HEIGHT AND SPACED 24 IN. OR 600 MM OC (MAX 16 IN. OC WHEN ITEMS 4A, 4B, 4C, OR 4D ARE USED).

2A. STEEL STUDS — (NOT SHOWN) — "E" - SHAPED STUDS INSTALLED BACK TO BACK IN PLACE OF "C-H" - SHAPED STUDS (ITEM 2) "E" - SHAPED STUDS SECURED TOGETHER WITH STEEL SCREWS SPACED A MAXIMUM 12 IN. OC. FABRICATED FROM MIN 25 MSG (MIN 20 MSG WHEN ITEM 2D, 4A, 4B OR 7 IS USED) GALV STEEL, MIN 2-1/2 IN. DEEP (MIN 4 IN. DEEP WHEN SYSTEM C IS USED), WITH ONE LEG 1 IN. LONG AND TWO LEGS 3/4 IN. LONG. SHORTER LEGS 1 IN. APART TO ENGAGE GYPSUM LINER PANELS. CUT TO LENGTHS 3/8 TO 1/2 IN. LESS THAN FLOOR TO CEILING HEIGHTS.

2B. FURRING CHANNELS — (OPTIONAL, NOT SHOWN) — FOR USE WITH SINGLE OR DOUBLE LAYER SYSTEMS. RESILIENT FURRING CHANNELS FABRICATED FROM MIN 25MSG CORROSION PROTECTED STEEL, INSTALLED HORIZONTALLY, AND SPACED VERTICALLY A MAX 24 IN. OC. FLANGE PORTION OF CHANNEL ATTACHED TO EACH INTERSECTING "C-H" OR "E" STUD ON SIDE OF STUD OPPOSITE THE 1 IN. LINER PANELS WITH 1/2 IN. LONG TYPE S OR S-12 PAN-HEAD STEEL SCREWS. WHEN FURRING CHANNELS ARE USED, WALLBOARD TO BE INSTALLED VERTICALLY ONLY. NOT TO BE USED WITH TYPE FRX-G GYPSUM WALLBOARD, TYPE RB-LBG (ITEM 4A), TYPE NELCO (ITEM 4B) OR CEMENTITIOUS BACKER UNITS (ITEM 7).

2C. FURRING CHANNELS — FOR USE WITH SYSTEM I - "HAT" - SHAPED, 25 MSG GALV STEEL FURRING CHANNELS ATTACHED DIRECTLY OVER THE INNER LAYERS OF WALLBOARD TO EACH STUD WITH 2 IN. LONG TYPE S PAN HEAD STEEL SCREWS. SCREWS ALTERNATE FROM TOP FLANGE TO BOTTOM FLANGE AT EACH STUD INTERSECTION. FURRING CHANNELS SPACED VERTICALLY MAX 24 IN. OC.

2D. STEEL FRAMING MEMBERS* — (OPTIONAL, NOT SHOWN) — FOR USE WITH SINGLE OR DOUBLE LAYER SYSTEMS. FURRING CHANNELS AND STEEL FRAMING MEMBERS AS DESCRIBED BELOW. NOT TO BE USED WITH TYPE FRX-G GYPSUM WALLBOARD, TYPE RB-LBG (ITEM 4A), TYPE NELCO (ITEM 4B) OR CEMENTITIOUS BACKER UNITS (ITEM 7):
A. FURRING CHANNELS — FORMED OF NO. 25 MSG GALV STEEL. 2-9/16 IN. OR 2-23/32 IN. WIDE BY 7/8 IN. DEEP, SPACED MAX. 24 IN. OC PERPENDICULAR TO STUDS. CHANNELS SECURED TO STUDS AS DESCRIBED IN ITEM B. GYPSUM BOARD INSTALLED VERTICALLY ONLY AND ATTACHED TO FURRING CHANNELS AS DESCRIBED IN ITEM 4.
B. STEEL FRAMING MEMBERS* — USED TO ATTACH FURRING CHANNELS (ITEM 2DA) TO STUDS (ITEM 2 OR 2A). CLIPS SPACED MAX. 24 IN. OC., AND SECURED TO STUDS WITH NO. 8 X 1-1/2 IN. MINIMUM SELF-DRILLING, S-12 STEEL SCREW THROUGH THE CENTER GROMMET. FURRING CHANNELS ARE FRICTION FITTED INTO CLIPS. RSIC-1 CLIP FOR USE WITH 2-9/16 IN. WIDE FURRING CHANNELS. RSIC-1 (2.75) CLIP FOR USE WITH 2-23/32 IN. WIDE FURRING CHANNELS.
PAC INTERNATIONAL L L C — TYPES RSIC-1, RSIC-1 (2.75)

2E. STEEL FRAMING MEMBERS* — (OPTIONAL, NOT SHOWN) — FURRING CHANNELS AND STEEL FRAMING MEMBERS AS DESCRIBED BELOW. . NOT TO BE USED WITH TYPE FRX-G GYPSUM WALLBOARD, TYPE RB-LBG (ITEM 4A), TYPE NELCO (ITEM 4B), TYPE X-RAY SHIELDED GYPSUM (ITEM 4C), TYPE RPP-LEAD LINED DRYWALL (ITEM 4F) OR CEMENTITIOUS BACKER UNITS (ITEM 7).
A. FURRING CHANNELS — FORMED OF NO. 25 MSG GALV STEEL. SPACED 24 IN. OC PERPENDICULAR TO STUDS. CHANNELS SECURED TO STUDS AS DESCRIBED IN ITEM B. ENDS OF ADJOINING CHANNELS OVERLAPPED 6 IN. AND TIED TOGETHER WITH DOUBLE STRAND OF NO. 18 AWG GALVANIZED STEEL WIRE.GYPSUM BOARD ATTACHED TO FURRING CHANNELS AS DESCRIBED IN ITEM 4.
B. STEEL FRAMING MEMBERS* — USED TO ATTACH FURRING CHANNELS (ITEM 2EA) TO STUDS. CLIPS SPACED 24 IN. OC., AND SECURED TO STUDS WITH 2 IN. COARSE DRYWALL SCREW WITH 1 IN. DIAM WASHER THROUGH THE CENTER HOLE. FURRING CHANNELS ARE FRICTION FITTED INTO CLIPS.
STUDCO BUILDING SYSTEMS — RESILMOUNT SOUND ISOLATION CLIPS - TYPE A237R

2F. STEEL FRAMING MEMBERS* — (OPTIONAL, NOT SHOWN) — FOR USE WITH SINGLE OR DOUBLE LAYER SYSTEMS. FURRING CHANNELS AND STEEL FRAMING MEMBERS AS DESCRIBED BELOW. NOT TO BE USED WITH TYPE FRX-G GYPSUM WALLBOARD, TYPE RB-LBG (ITEM 4A), TYPE NELCO (ITEM 4B) OR CEMENTITIOUS BACKER UNITS (ITEM 7):
A. FURRING CHANNELS — FORMED OF NO. 25 MSG GALV STEEL. 2-3/8 IN. WIDE BY 7/8 IN. DEEP, SPACED MAX. 24 IN. OC PERPENDICULAR TO STUDS. CHANNELS SECURED TO STUDS AS DESCRIBED IN ITEM B. GYPSUM BOARD INSTALLED VERTICALLY ONLY AND ATTACHED TO FURRING CHANNELS AS DESCRIBED IN ITEM 3.
B. STEEL FRAMING MEMBERS* — USED TO ATTACH FURRING CHANNELS (ITEM 2DA) TO STUDS (ITEM 2 OR 2A). CLIPS SPACED MAX. 24 IN. OC. GENIECLIPS SECURED TO STUDS WITH NO. 8 X 1-1/2 IN. MINIMUM SELF-DRILLING, S-12 STEEL SCREW THROUGH THE CENTER GROMMET. FURRING CHANNELS ARE FRICTION FITTED INTO CLIPS.
PLITEQ INC — TYPE GENIECLIP

2G. STEEL FRAMING MEMBERS* — (OPTIONAL, NOT SHOWN) — FURRING CHANNELS AND STEEL FRAMING MEMBERS AS DESCRIBED BELOW. NOT TO BE USED WITH TYPE FRX-G GYPSUM WALLBOARD, TYPE RB-LBG (ITEM 4A), TYPE NELCO (ITEM 4B), TYPE X-RAY SHIELDED GYPSUM (ITEM 4C), TYPE RPP-LEAD LINED DRYWALL (ITEM 4F) OR CEMENTITIOUS BACKER UNITS (ITEM 7):
A. FURRING CHANNELS — FORMED OF NO. 25 MSG GALV STEEL. SPACED 24 IN. OC PERPENDICULAR TO STUDS. CHANNELS SECURED TO STUDS AS DESCRIBED IN ITEM 2GB. ENDS OF ADJOINING CHANNELS OVERLAPPED 6 IN. AND TIED TOGETHER WITH DOUBLE STRAND OF NO. 18 AWG GALVANIZED STEEL WIRE. GYPSUM BOARD ATTACHED TO FURRING CHANNELS AS DESCRIBED IN ITEM 4.
B. STEEL FRAMING MEMBERS* — USED TO ATTACH FURRING CHANNELS (ITEM 2GA) TO STUDS. CLIPS SPACED 24 IN. OC., AND SECURED TO STUDS WITH NO. 8 X 2-1/2 IN. COARSE DRYWALL SCREW THROUGH THE CENTER HOLE. FURRING CHANNELS ARE FRICTION FITTED INTO CLIPS.
REGUPOL AMERICA — TYPE SONUSCLIP

2H. STEEL FRAMING MEMBERS* — (OPTIONAL, NOT SHOWN) — RESILIENT CHANNELS AND STEEL FRAMING MEMBERS AS DESCRIBED BELOW. NOT TO BE USED WITH TYPE FRX-G GYPSUM WALLBOARD, TYPE RB-LBG (ITEM 4A), TYPE NELCO (ITEM 4B), TYPE X-RAY SHIELDED GYPSUM (ITEM 4C), TYPE RPP-LEAD LINED DRYWALL (ITEM 4F) OR CEMENTITIOUS BACKER UNITS (ITEM 7)::
A. RESILIENT CHANNELS — FORMED OF NO. 25 MSG GALV STEEL, SPACED 24 IN. OC, AND PERPENDICULAR TO STUDS. CHANNELS SECURED TO STUDS AS DESCRIBED IN ITEM B. ENDS OF ADJOINING CHANNELS OVERLAPPED 6 IN. AND SECURED IN PLACE WITH TWO NO. 8 15 X 1/2 IN. PHILIPS MODIFIED TRUSS SCREWS SPACED 2-1/2 IN. FROM THE CENTER OF THE OVERLAP. GYPSUM BOARD ATTACHED TO RESILIENT CHANNELS AS DESCRIBED IN ITEM 4.
B. STEEL FRAMING MEMBERS* — USED TO ATTACH RESILIENT CHANNELS (ITEM 2HA) TO STUDS. CLIPS SPACED 48 IN. OC., AND SECURED TO STUDS WITH NO. 8 X 2-1/2 IN. COARSE DRYWALL SCREW THROUGH THE CENTER HOLE. RESILIENT CHANNELS ARE SECURED TO CLIPS WITH ONE NO. 10 X 1/2 IN. PAN-HEAD SELF-DRILLING SCREW.
KEENE BUILDING PRODUCTS CO INC — TYPE RC+ ASSURANCE CLIP

3. GYPSUM BOARD* — GYPSUM LINER PANELS, NOM 1 IN. THICK, 24 IN. OR 600 MM (FOR METRIC SPACING) WIDE. PANELS CUT 1 IN. LESS IN LENGTH THAN FLOOR TO CEILING HEIGHT. VERTICAL EDGES INSERTED IN "H" PORTION OF "C-H" STUDS OR THE GAP BETWEEN THE TWO 3/4 IN. LEGS OF THE "E" STUDS. FREE EDGE OF END PANELS ATTACHED TO LONG LEG OF VERTICAL "J" - RUNNERS WITH 1-5/8 IN. LONG TYPE S STEEL SCREWS SPACED NOT GREATER THAN 12 IN. OC. WHEN WALL HEIGHT EXCEEDS LINER PANEL LENGTH, LINER PANEL MAY BE BUTTED TO EXTEND TO THE FULL HEIGHT OF THE WALL. HORIZONTAL JOINTS NEED NOT BE BACKED BY STEEL FRAMING. IN SYSTEM I, BUTT JOINTS IN LINER PANELS ARE STAGGERED MIN 36 IN. BUTT JOINTS BACKED WITH 6 IN. BY 22 IN. STRIPS OF 3/4 IN. THICK GYPSUM WALLBOARD (ITEM 4). WALLBOARD STRIPS CENTERED OVER BUTT JOINTS AND SECURED TO LINER PANELS WITH SIX 1-1/2 IN. LONG TYPE G STEEL SCREWS, THREE SCREWS ALONG THE 22 IN. DIMENSION AT THE TOP AND BOTTOM OF THE STRIPS.
CGC INC — TYPE SLX
UNITED STATES GYPSUM CO — TYPE SLX
USG BORAL DRYWALL SFZ LLC — TYPE SLX
USG MEXICO S A DE C V — TYPE SLX

4. GYPSUM BOARD* —
SYSTEM A — 1 HR
GYPSUM PANELS, WITH BEVELED, SQUARE OR TAPERED EDGES, NOM 5/8 IN. THICK, 48 IN. OR 1200 MM WIDE, APPLIED VERTICALLY OR HORIZONTALLY, ATTACHED TO STUDS WITH 1 IN. LONG TYPE S STEEL SCREWS SPACED 12 IN. WHEN INSTALLED VERTICALLY OR 8 IN OC WHEN INSTALLED HORIZONTALLY. HORIZONTAL JOINTS NEED NOT BE BACKED BY STEEL FRAMING.
CGC INC — TYPES AR, C, IP-AR, IP-X1, IP-X2, IPC-AR, SCX, SHX, ULX, USGX, WRC, WRX
UNITED STATES GYPSUM CO — TYPES AR, C, FRX-G, IP-AR, IP-X1, IP-X2, IPC-AR, SCX, SGX, SHX, ULIX, ULX, WRC, WRX, USGX. WHEN ULIX IS USED INSULATION, ITEM 6, BATTS AND BLANKETS* IS REQUIRED AND MINIMUM STUD DEPTH IS 4 IN.
USG BORAL DRYWALL SFZ LLC — TYPES C, SCX, SGX, USGX
USG MEXICO S A DE C V — TYPES AR, C, IP-AR, IP-X1, IP-X2, IPC-AR, SCX, SHX, ULX, USGX, WRC, WRX

4A. GYPSUM BOARD* — (AS AN ALTERNATE TO ITEM 4 SYSTEMS A, B, C, D, E, G, H, AND I WHEN USED AS THE BASE LAYER, FOR DIRECT ATTACHMENT ONLY) — NOM 5/8 IN. OR 3/4 IN. THICK LEAD BACKED GYPSUM PANELS WITH BEVELED, SQUARE OR TAPERED EDGES, APPLIED VERTICALLY. VERTICAL JOINTS CENTERED OVER 20 MSG STEEL STUDS AND STAGGERED MIN 1 STUD CAVITY ON OPPOSITE SIDES OF STUDS. SEE ITEMS 1, 2, 2A, 2B AND 2D. WALLBOARD SECURED TO STUDS WITH 1-1/4 IN. LONG TYPE S-12 STEEL SCREWS SPACED 8 IN. OC AT PERIMETER AND 12 IN. OC IN THE FIELD. FOR JOINT COMPOUND SEE ITEM 5. TO BE USED WITH LEAD BATTEN STRIPS (SEE ITEM 9) OR LEAD DISCS OR TABS (SEE ITEM 10).
RAY-BAR ENGINEERING CORP — TYPE RB-LBG

4B. GYPSUM BOARD* — (AS AN ALTERNATE TO ITEM 4 SYSTEMS A, B, C, D, E, G, H, AND I WHEN USED AS THE BASE LAYER, FOR DIRECT ATTACHMENT ONLY) — NOMINAL 5/8 IN. THICK LEAD BACKED GYPSUM PANELS WITH BEVELED, SQUARE OR TAPERED EDGES, APPLIED VERTICALLY. VERTICAL JOINTS CENTERED OVER STUDS AND STAGGERED MIN 1 STUD CAVITY ON OPPOSITE SIDES OF STUDS. WALLBOARD SECURED TO STUDS WITH 1-1/4 IN. LONG TYPE S-12 (OR #6 BY 1-1/4 IN. LONG BUGLE HEAD FINE DRILLER) STEEL SCREWS SPACED 8 IN. OC AT PERIMETER AND 12 IN. OC IN THE FIELD.
NEW ENGLAND LEAD BURNING CO INC, DBA NELCO — TYPE NELCO

4C. GYPSUM BOARD* — (AS AN ALTERNATE TO ITEM 4 SYSTEMS A, B, C, D, E, G, H, AND I WHEN USED AS THE BASE LAYER, FOR DIRECT ATTACHMENT ONLY) — NOM 5/8 OR 3/4 IN. THICK LEAD BACKED GYPSUM PANELS WITH BEVELED, SQUARE OR TAPERED EDGES, APPLIED VERTICALLY. VERTICAL JOINTS CENTERED OVER 20 MSG STEEL STUDS AND STAGGERED MIN 1 STUD CAVITY ON OPPOSITE SIDES OF STUDS. SEE ITEMS 1, 2, 2A, 2B AND 2D. WALLBOARD SECURED TO STUDS WITH 1-1/4 IN. LONG TYPE S-12 STEEL SCREWS SPACED 8 IN. OC AT PERIMETER AND 12 IN. OC IN THE FIELD. FOR JOINT COMPOUND SEE ITEM 5. TO BE USED WITH LEAD BATTEN STRIPS (SEE ITEM 9A) OR LEAD DISCS (SEE ITEM 10A). LEAD BATTEN STRIPS REQUIRED BEHIND VERTICAL JOINTS OF LEAD BACKED GYPSUM WALLBOARD AND OPTIONAL AT REMAINING STUD LOCATIONS. LEAD BATTEN STRIPS, MIN 2 IN. WIDE, MAX 10 FT LONG WITH A MAX THICKNESS OF 0.140 IN. PLACED ON THE FACE OF STUDS AND ATTACHED TO THE STUD WITH TWO 1 IN. LONG TYPE S-8 PAN HEAD STEEL SCREWS, ONE AT THE TOP OF THE STRIP AND ONE AT THE BOTTOM OF THE STRIP.
MAYCO INDUSTRIES INC — TYPE X-RAY SHIELDED GYPSUM

4D. GYPSUM BOARD* — (AS AN ALTERNATE TO ITEM 4 SYSTEMS A, B, C, D, E, G, H, AND I WHEN USED AS THE BASE LAYER, FOR DIRECT ATTACHMENT ONLY) — NOM 5/8 IN. THICK LEAD BACKED GYPSUM PANELS WITH BEVELED, SQUARE OR TAPERED EDGES, APPLIED VERTICALLY. VERTICAL JOINTS CENTERED OVER STUDS AND STAGGERED MIN 1 STUD CAVITY ON OPPOSITE SIDES OF STUDS. WALLBOARD SECURED TO STUDS WITH 1-1/4 IN. LONG TYPE S-12 STEEL SCREWS GYPSUM PANEL STEEL SCREWS SPACED 8 IN. OC AT PERIMETER AND 12 IN. OC IN THE FIELD. LEAD BATTEN STRIPS REQUIRED BEHIND VERTICAL JOINTS OF LEAD BACKED GYPSUM WALLBOARD AND OPTIONAL AT REMAINING STUD LOCATIONS. LEAD BATTEN STRIPS, MIN 2 IN. WIDE, MAX 8 FT LONG WITH A MAX THICKNESS OF 0.14 IN. PLACED ON THE FACE OF STUDS AND ATTACHED TO THE STUD WITH CONSTRUCTION ADHESIVE AND TWO 1 IN. LONG TYPE S-12 PAN HEAD STEEL SCREWS, ONE AT THE TOP OF THE STRIP AND ONE AT THE BOTTOM OF THE STRIP. LEAD DISCS, NOMINAL 3/8 IN. DIAM BY MAX 0.085 IN. THICK. COMPRESSION FITTED OR ADHERED OVER THE SCREW HEADS. LEAD BATTEN STRIPS AND DISCS TO HAVE A PURITY OF 99.9% MEETING THE FEDERAL SPECIFICATION QQ-L-201F, GRADE "C".
RADIATION PROTECTION PRODUCTS INC — TYPE RPP - LEAD LINED DRYWALL

5. JOINT TAPE AND COMPOUND — (NOT SHOWN)
SYSTEMS A, B, C, E, F, G, H, I
JOINTS ON OUTER LAYERS OF GYPSUM BOARDS (ITEM 4 AND 4A) COVERED WITH PAPER TAPE AND JOINT COMPOUND. PAPER TAPE AND JOINT COMPOUND MAY BE OMITTED WHEN GYPSUM BOARDS ARE SUPPLIED WITH SQUARE EDGES. EXPOSED SCREW HEADS COVERED WITH JOINT COMPOUND.

6. BATTS AND BLANKETS* —
SYSTEMS A, B, E, F, G, H, I
(OPTIONAL) — MINERAL WOOL OR GLASS FIBER BATTS PARTIALLY OR COMPLETELY FILLING STUD CAVITY. ANY MINERAL WOOL OR GLASS FIBER BATT MINERAL BEARING THE UL CLASSIFICATION MARKING AS TO FIRE RESISTANCE.
SYSTEM A WITH TYPE ULIX GYPSUM BOARDS
PLACED IN STUD CAVITIES, ANY MIN. 3-1/2 IN. THICK GLASS FIBER INSULATION BEARING THE UL CLASSIFICATION MARKING AS TO SURFACE BURNING CHARACTERISTICS AND/OR FIRE RESISTANCE. SEE BATTS AND BLANKETS (BKNV OR BZJZ) CATEGORIES FOR NAMES OF CLASSIFIED COMPANIES.

1SYSTEMS C & D
MIN 3 IN. (SYSTEM C) AND MIN 1-1/2 IN. (SYSTEM D) THICK MINERAL WOOL BATTS, FRICTION FITTED BETWEEN THE STUDS AND FLOOR AND CEILING RUNNERS.
ROCKWOOL — TYPE AFB
THERMAFIBER INC — TYPE SAFB, SAFB FF

7. CEMENTITIOUS BACKER UNITS* — (SYSTEM D) — NOM 1/2 OR 5/8 IN. THICK PANELS, SQUARE EDGE, ATTACHED TO STUDS OVER GYPSUM WALLBOARD WITH 1-5/8 IN. LONG, TYPE S-12, CORROSION RESISTANT STEEL SCREWS SPACED 8 IN. OC AND STAGGERED 8 IN. FROM GYPSUM WALL BOARD SCREWS. JOINTS COVERED WITH GLASS FIBER MESH TAPE. VERTICAL JOINTS STAGGERED ONE STUD CAVITY FROM GYPSUM WALLBOARD JOINTS. HORIZONTAL JOINTS STAGGERED A MIN OF 12 IN. FROM THE GYPSUM WALLBOARD JOINTS.
UNITED STATES GYPSUM CO — TYPE DCB

8. LAMINATING ADHESIVE* — (OPTIONAL, NOT SHOWN) — USED TO BOND OUTER LAYER OF CEMENTITIOUS BACKER UNITS (ITEM 7) TO INNER LAYERS OF GYPSUM BOARD (ITEM 4) IN SYSTEM D. ANSI A136.1 TYPE 1 ORGANIC ADHESIVE APPLIED WITH 1/4 IN. SQUARE NOTCHED TROWEL. SEE ADHESIVES (BYWR) IN THE FIRE RESISTANCE DIRECTORY OR ADHESIVES (BJLZ) IN THE BUILDING MATERIALS DIRECTORY FOR NAMES OF CLASSIFIED COMPANIES.

9. LEAD BATTEN STRIPS — (NOT SHOWN, FOR USE WITH ITEM 4A) — LEAD BATTEN STRIPS, MIN 1-1/2 IN. WIDE, MAX 10 FT LONG WITH A MAX THICKNESS OF 0.125 IN. STRIPS PLACED ON THE INTERIOR FACE OF STUDS AND ATTACHED FROM THE EXTERIOR FACE OF THE STUD WITH TWO 1 IN. LONG TYPE S-12 PAN HEAD STEEL SCREWS, ONE AT THE TOP OF THE STRIP AND ONE AT THE BOTTOM OF THE STRIP. LEAD BATTEN STRIPS TO HAVE A PURITY OF 99.9% MEETING THE FEDERAL SPECIFICATION QQ-L-201F, GRADE "C". LEAD BATTEN STRIPS REQUIRED BEHIND VERTICAL JOINTS OF LEAD BACKED GYPSUM WALLBOARD (ITEM 4A) AND OPTIONAL AT REMAINING STUD LOCATIONS. REQUIRED BEHIND VERTICAL JOINTS.

9A. LEAD BATTEN STRIPS — (NOT SHOWN, FOR USE WITH ITEM 4C) — LEAD BATTEN STRIPS, 2 IN. WIDE, MAX 10 FT LONG WITH A MAX THICKNESS OF 0.140 IN. STRIPS PLACED ON THE FACE OF STUDS AND ATTACHED TO THE STUD WITH TWO MIN. 1 IN. LONG MIN. TYPE S-8 PAN HEAD STEEL SCREWS, ONE AT THE TOP OF THE STRIP AND ONE AT THE BOTTOM OF THE STRIP OR WITH ONE MIN. 1 IN. LONG MIN. TYPE S-8 PAN HEAD STEEL SCREW AT THE TOP OF THE STRIP. LEAD BATTEN STRIPS TO HAVE A PURITY OF 99.5% MEETING THE FEDERAL SPECIFICATION QQ-L-201F, GRADES "B, C OR D".. LEAD BATTEN STRIPS REQUIRED BEHIND VERTICAL JOINTS OF LEAD BACKED GYPSUM WALLBOARD (ITEM 6) AND OPTIONAL AT REMAINING STUD LOCATIONS.

10. LEAD DISCS OR TABS — (NOT SHOWN, FOR USE WITH ITEM 4A) — USED IN LIEU OF OR IN ADDITION TO THE LEAD BATTEN STRIPS (ITEM 9) OR OPTIONAL AT OTHER LOCATIONS - MAX 3/4 IN. DIAM BY MAX 0.125 IN. THICK LEAD DISCS COMPRESSION FITTED OR ADHERED OVER STEEL SCREW HEADS OR MAX 1/2 IN. BY 1-1/4 IN. BY MAX 0.125 IN. THICK LEAD TABS PLACED ON GYPSUM BOARDS (ITEM 4A) UNDERNEATH SCREW LOCATIONS PRIOR TO THE INSTALLATION OF THE SCREWS. LEAD DISCS OR TABS TO HAVE A PURITY OF 99.9% MEETING THE FEDERAL SPECIFICATION QQ-L-201F, GRADE "C".

10A. LEAD DISCS — (NOT SHOWN, FOR USE WITH ITEM 4C) — MAX 5/16 IN. DIAM BY MAX 0.140 IN. THICK LEAD DISCS COMPRESSION FITTED OR ADHERED OVER STEEL SCREW HEADS. LEAD DISCS TO HAVE A PURITY OF 99.5% MEETING THE FEDERAL SPECIFICATION QQ-L-201F, GRADES "B, C OR D".

11. LEAD BATTEN STRIPS — (NOT SHOWN, FOR USE WITH ITEM 4B) — LEAD BATTEN STRIPS, 2 IN. WIDE, MAX 10 FT LONG WITH A MAX THICKNESS OF 0.142 IN. STRIPS PLACED ON THE FACE OF STUDS AND ATTACHED TO THE STUD WITH TWO MIN. 1 IN. LONG MIN. TYPE S-8 PAN HEAD STEEL SCREWS, ONE AT THE TOP OF THE STRIP AND ONE AT THE BOTTOM OF THE STRIP OR WITH ONE MIN. 1 IN. LONG MIN. TYPE S-8 PAN HEAD STEEL SCREW AT THE TOP OF THE STRIP. LEAD BATTEN STRIPS TO HAVE A PURITY OF 99.9% MEETING THE FEDERAL SPECIFICATION QQ-L-201F, GRADE "C". LEAD BATTEN STRIPS REQUIRED BEHIND VERTICAL JOINTS OF LEAD BACKED GYPSUM WALLBOARD (ITEM 4B) AND OPTIONAL AT REMAINING STUD LOCATIONS.

12. LEAD TABS — (NOT SHOWN, FOR USE WITH ITEM 4B) — 2 IN. WIDE, 5 IN. LONG WITH A MAX THICKNESS OF 0.142 IN. TABS FRICTION-FIT AROUND FRONT FACE OF STUD, THE STUD FOLDED BACK FLANGE, AND THE BACK FACE OF THE STUD. TABS REQUIRED AT EACH LOCATION WHERE A SCREW (THAT SECURES THE GYPSUM BOARDS, ITEM 4B) WILL PENETRATE THE STEEL STUD. LEAD TABS TO HAVE A PURITY OF 99.9% MEETING THE FEDERAL SPECIFICATION QQ-L-201F, GRADE "C". LEAD TABS MAY BE HELD IN PLACE WITH STANDARD ADHESIVE TAPE IF NECESSARY.
* INDICATES SUCH PRODUCTS SHALL BEAR THE UL OR CUL CERTIFICATION MARK FOR JURISDICTIONS EMPLOYING THE UL OR CUL CERTIFICATION (SUCH AS CANADA), RESPECTIVELY.

DESIGN NO. U906

APRIL 14, 2023

BEARING WALL RATING — 2 HR.
NONBEARING WALL RATING — 2 HR.
THIS DESIGN WAS EVALUATED USING A LOAD DESIGN METHOD OTHER THAN THE LIMIT STATES DESIGN METHOD (E.G., WORKING STRESS DESIGN METHOD). FOR JURISDICTIONS EMPLOYING THE LIMIT STATES DESIGN METHOD, SUCH AS CANADA, A LOAD RESTRICTION FACTOR SHALL BE USED — SEE GUIDE BXUV OR BXUV7

*** INDICATES SUCH PRODUCTS SHALL BEAR THE UL OR CUL CERTIFICATION MARK FOR JURISDICTIONS EMPLOYING THE UL OR CUL CERTIFICATION (SUCH AS CANADA), RESPECTIVELY.**

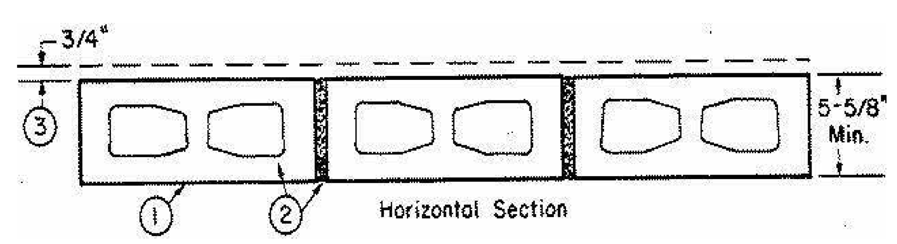

1. **CONCRETE BLOCKS* —** NOMINAL 6 BY 8 BY 16 IN, HOLLOW OR SOLID. VARIOUS DESIGNS. CLASSIFICATION (2 HR). SEE **CONCRETE BLOCKS** CATEGORY FOR LIST OF ELIGIBLE MANUFACTURERS.

ANCHOR CONCRETE PRODUCTS INC
GAGNE & SON CONCRETE BLOCK INC
GLENWOOD MASONRY PRODUCTS

ALLOWABLE COMPRESSIVE STRESS OF 57% OF MAX ALLOWABLE COMPRESSIVE STRESS IN ACCORDANCE WITH THE EMPIRICAL DESIGN METHOD.

OLDCASTLE APG SOUTH INC, DBA ADAMS PRODUCTS
WESTBROOK CONCRETE BLOCK CO INC

ALLOWABLE COMPRESSIVE STRESS OF 75.6% OF MAX ALLOWABLE COMPRESSIVE STRESS IN ACCORDANCE WITH THE EMPIRICAL DESIGN METHOD.

2. **MORTAR —** BLOCKS LAID IN FULL BED OF MORTAR, NOM. 3/8 IN. THICK, OF NOT LESS THAN 2-1/4 AND NOT MORE THAN 3-1/2 PARTS OF CLEAN SHARP SAND TO 1 PART PORTLAND CEMENT (PROPORTIONED BY VOLUME) AND NOT MORE THAN 50 PERCENT HYDRATED LIME (BY CEMENT VOLUME). VERTICAL JOINTS STAGGERED.

3. **PORTLAND CEMENT STUCCO OR GYPSUM PLASTER —** ADD 1/2 HR TO CLASSIFICATION IF USED. ATTACHED TO CONCRETE BLOCKS (ITEM 1).

4. **FOAMED PLASTIC* —** (OPTIONAL-NOT SHOWN) — 1-1/2 IN. THICK MAX, 4 FT WIDE SHEATHING ATTACHED TO CONCRETE BLOCKS (ITEM 1).

ATLAS ROOFING CORP — ENERGYSHIELD PRO WALL INSULATION, ENERGYSHIELD PRO 2 WALL INSULATION, ENERGYSHIELD CGF PRO, ENERGYSHIELD PLY PRO, ENERGYSHIELD® CGF, ENERGYSHIELD® PANELCAST, ENERGYSHIELD® AND "ENERGYSHIELD® XR

DUPONT DE NEMOURS, INC. — TYPES THERMAX SHEATHING, THERMAX LIGHT DUTY INSULATION, THERMAX HEAVY DUTY INSULATION, THERMAX METAL BUILDING BOARD, THERMAX WHITE FINISH INSULATION, THERMAX CI EXTERIOR INSULATION, THERMAX XARMOR CI EXTERIOR INSULATION, THERMAX IH INSULATION, THERMAX PLUS LINER PANEL, THERMAX HEAVY DUTY PLUS (HDP), TUFF-R™ CI INSULATION, THERMAX BUTLER STYLWALL INSULATION BOARD AND THERMAX MORTON HEAVY DUTY INSULATION BOARD

HOLCIM SOLUTIONS AND PRODUCTS US, LLC — "ENVERGE™ CI FOIL EXTERIOR WALL INSULATION" AND "ENVERGE™ CI GLASS EXTERIOR WALL INSULATION"

HUNTER PANELS, A DIVISION OF CARLISLE CONSTRUCTION MATERIALS, LLC — TYPES "XCI-CLASS A", "XCI 286", "XCI FOIL (CLASS A)"

RMAX, A BUSINESS UNIT OF SIKA CORPORATION — TYPES "TSX-8500", "ECOMAXCI FR", "TSX-8510", "ECOMAX XI FR WHITE", "ECOMAXCI", "ECOMAXCI FR AIR BARRIER", "THERMASHEATH-XP", "THERMASHEATH", "DURASHEATH"

JOHNS MANVILLE — TYPE "AP FOIL-FACED FOAM SHEATHING"

4A. **BUILDING UNITS* —** AS AN ALTERNATE TO ITEM 4, MIN. 1-IN THICK POLYISOCYANURATE COMPOSITE FOAMED PLASTIC INSULATION BOARDS, NOM. 48 BY 48 OR 96 IN.

ATLAS ROOFING CORP — ENERGYSHIELD® PLY

RMAX, A BUSINESS UNIT OF SIKA CORPORATION — "THERMASHEATH-SI", "ECOBASECI", "THERMABASE-CI", "ECOMAXCI FR PLY", "ECOMAXCI PLY

*** INDICATES SUCH PRODUCTS SHALL BEAR THE UL OR CUL CERTIFICATION MARK FOR JURISDICTIONS EMPLOYING THE UL OR CUL CERTIFICATION (SUCH AS CANADA), RESPECTIVELY.**

RATED UL ASSEMBLIES

FLOOR OR WALL ASSEMBLY
MIN 3" THICK LIGHTWEIGHT OR NORMAL WEIGHT CONCRETE FLOOR OR WALL, OR CMU BLOCK WALL. THE MAX AREA OF THE OPENING IS 240 SQ INCHES WITH A MAX DIMENSION OF 30". THE ANNULAR SPACE RANGE IS 1/8" TO 2 1/8".

METALLIC PIPE
ONE OR MORE 1" NOMINAL DIAMETER, OR SMALLER, SCH. 10 STEEL, CAST IRON, OR 1" DIAMETER OR SMALLER TYPL L COPPER PIPE OR TUBING. ANNULAR SPACE BETWEEN PIPES SHALL BE 1/8" TO 1/2".

PIPE INSULATION
MAX 1/2" THICK AB/PVC (ARMAFLEX) FLEXIBLE FOAM INSULATION.

STEEL DUCT
MAX 10" x 8" STEEL DUCT MIN 22 GA W/2" THICK FIBERGLASS INSULATION.

FORMING MATERIAL
TIGHTLY PACK MIN 4 PCF MINERAL WOOL BATT INSULATION TO FILL THE ANNULAR SPACE, AND RECESS MIN 3/4" FROM TOP SURFACE OF THE FLOOR. FOR WALL APPLICATIONS, THE FORMING MATERIAL MUST BE CENTERED IN THE OPENING AND RECESSED 3/4" FROM BOTH SURFACES OF THE WALL.

NELSON LBS+ SEALANT
APPLY NELSON LBS+ SEALANT OVER THE FORMING MATERIAL TO A MIN 3/4" DEPTH, FLUSH WITH THE TOP SURFACE OF THE FLOOR OR BOTH SIDES OF THE WALL.

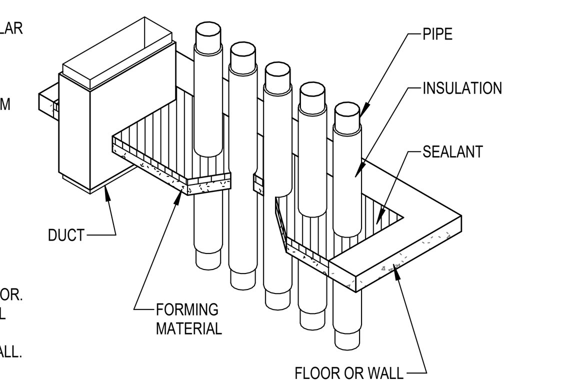

FIRE RATING 1HR.
T RATING 0 HR.

FIRESTOPPING OF MECHANICAL WORK SHALL BE BY MECHANICAL CONTRACTOR UNLESS OTHERWISE APPROVED BY ARCHITECT.

FIRESTOP - CONCRETE FLOOR OR WALL
SCALE: 1 1/2" = 1'-0"

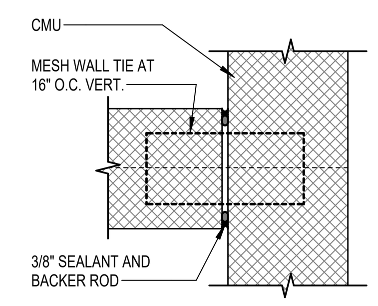

TYP. MASONRY CONTROL JOINT - CMU INTERIOR PARTITION AT EXTERIOR WALL
SCALE: 1 1/2" = 1'-0"

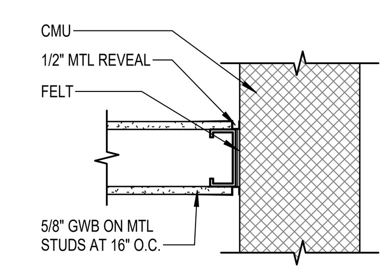

TYP. STUD TO MASONRY JOINT
SCALE: 1 1/2" = 1'-0"

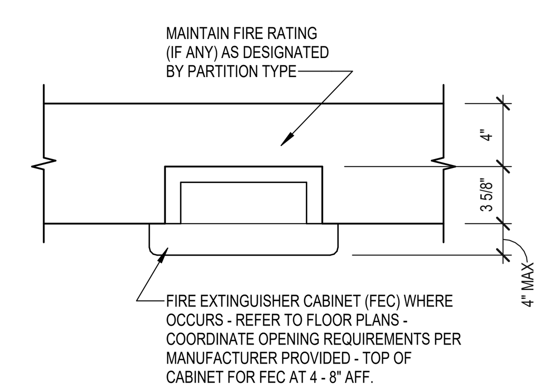

FEC DETAIL
SCALE: 1 1/2" = 1'-0"

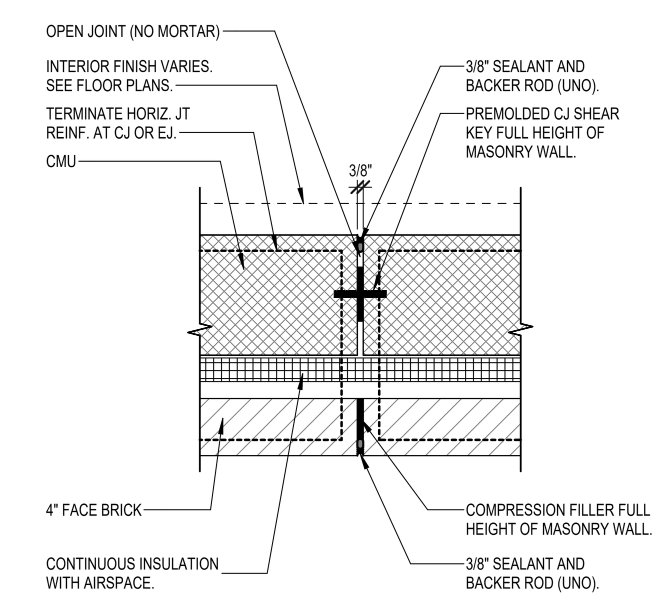

CONTROL JOINT #1
SCALE: 1 1/2" = 1'-0"

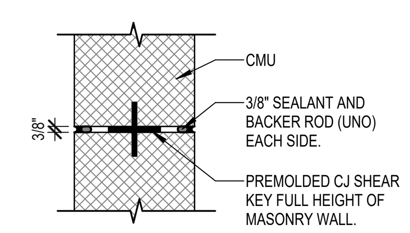

CONTROL JOINT - CMU PARTITION (TYP.)
SCALE: 1 1/2" = 1'-0"

LOCATE GWB CONTROL JOINTS AS FOLLOWS:
1. PARTITIONS OR FURRING EXCEEDING 30'-0" SPANS HORIZONTAL OR VERTICAL.
2. WHERE PARTITION ABUTS A STRUCTURAL ELEMENT OR DISSIMILAR WALL.
3. IF CONTROL JOINT LOCATION OCCURS AT DOOR OR WINDOW OPENING, PROVIDE CONTROL JOINTS AT EACH SIDE OF OPENING, ALIGNED WITH EGE OF FRAME.
4. AT ANY LOCATION OBSERVED TO HAVE EXCESS MOVEMENT DURING CONSTRUCTION.
5. AT CHANGES WITHIN PLANE OF PARTITION.
6. AT EXPANSION JOINTS.

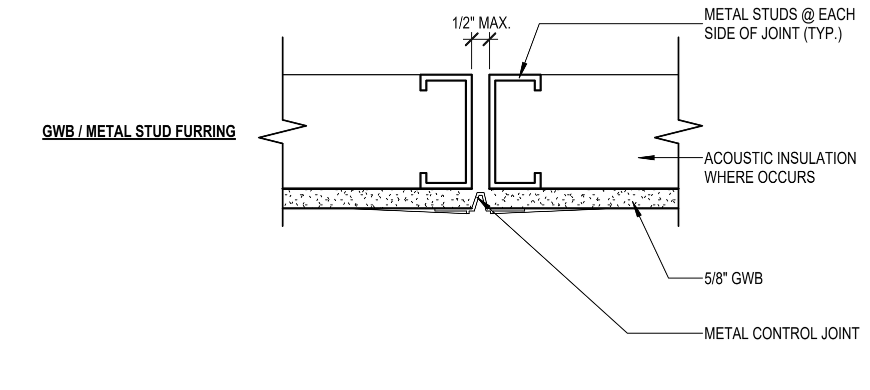

CONTROL JOINT - GWB / METAL STUD FRAMING
SCALE: 3" = 1'-0"

SPECTRUM DESIGN
architects | engineers

Plaza Suite 1
10 Church Avenue, SE
Roanoke, VA 24011

540.342.6001
spectrumpc.com

BEDFORD COUNTY SHERIFF'S OFFICE EXPANSION

SPECTRUM DESIGN PROJECT NO.: **24112**

COMMONWEALTH OF VIRGINIA
TRAVIS ROOKSTOOL
Lic. No. 17288
05.04.2026
ARCHITECT

PROJ. MGR.: **JM** CHECKED BY: **GEG** DRAWN BY: **TLR, MIG**

SHEET ISSUE DATE:
05.04.2026

PROJECT PHASE:
BID DOCUMENTS

SHEET REVISIONS:

SHEET NAME:
UL ASSEMBLIES & JOINT / PENETRATION DETAILS

SHEET NUMBER:
A003

ORIGINAL SIZE : ARCH E1 (30X42) | 5/5/2026 2:59:21 AM
C:\Users\trookstool.SPECTRUM\OneDrive - Spectrum Design PC\Documents\24112 Arch Sheriff R26 Central_trookstool@spectrumpc.com.rvt

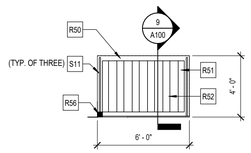

1 CANOPY PLAN
A100 SCALE: 1/4" = 1'-0"

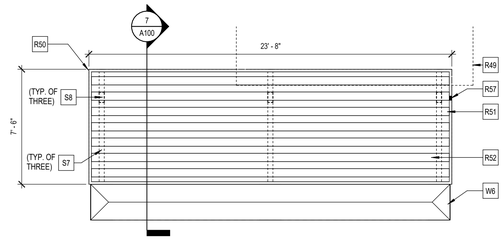

2 CANOPY PLAN
A100 SCALE: 1/4" = 1'-0"

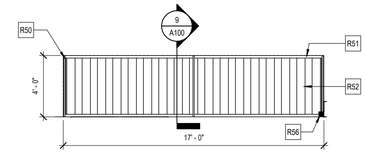

3 CANOPY PLAN
A100 SCALE: 1/4" = 1'-0"

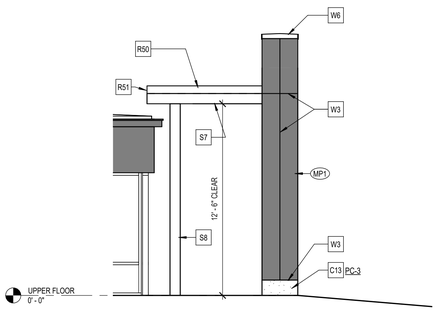

4 ELEVATION - COLONNADE
A100 SCALE: 1/4" = 1'-0"
REF: A100

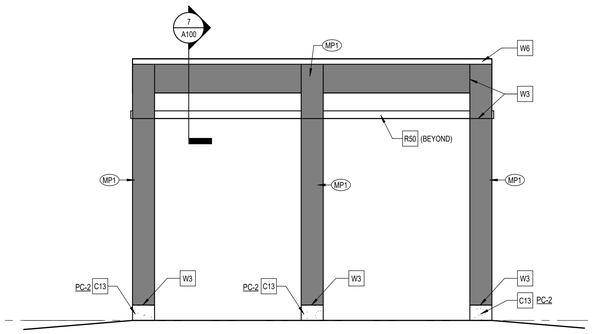

5 ELEVATION - COLONNADE
A100 SCALE: 1/4" = 1'-0"
REF: A100

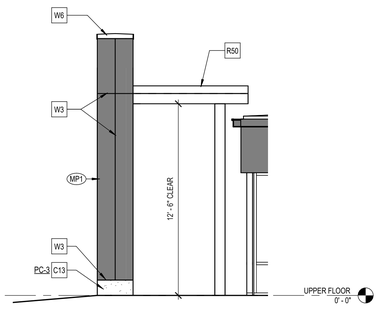

6 ELEVATION - COLONNADE
A100 SCALE: 1/4" = 1'-0"
REF: A100

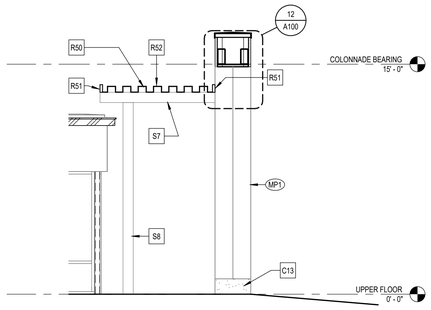

7 COLONNADE SECTION
A100 SCALE: 1/4" = 1'-0"
REF: A100

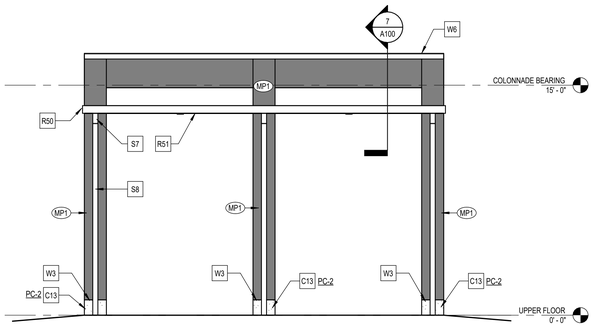

8 ELEVATION - COLONNADE
A100 SCALE: 1/4" = 1'-0"
REF: A100

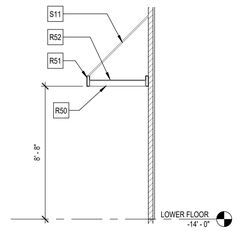

9 REAR CANOPY SECTION
A100 SCALE: 1/4" = 1'-0"
REF: A100

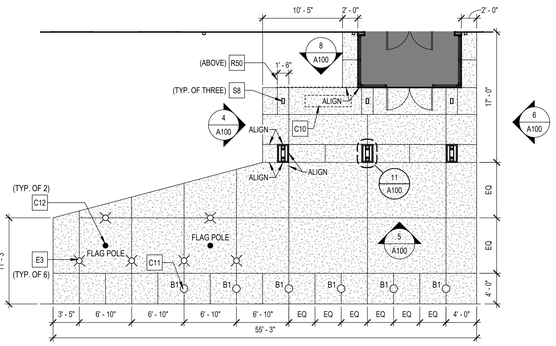

10 SITE PLAN - MAIN ENTRANCE
A100 SCALE: 1/8" = 1'-0"
REF: A100

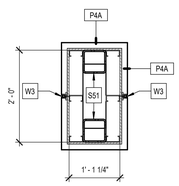

11 TYP. COLONNADE COLUMN
A100 SCALE: 3/4" = 1'-0"
REF: A100

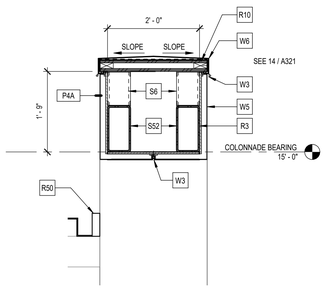

12 COLONNADE SECTION DETAIL
A100 SCALE: 3/4" = 1'-0"
REF: A100

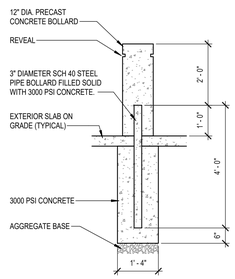

13 PRECAST CONCRETE BOLLARD (B1)
A100 SCALE: 1/2" = 1'-0"

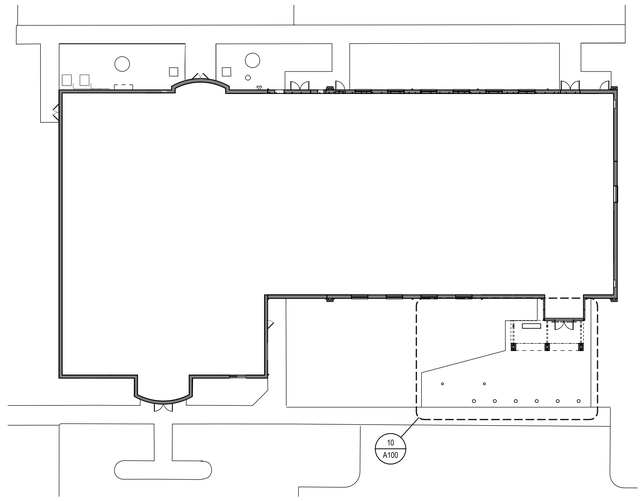

14 OVERALL SITE PLAN
A100 SCALE: 1" = 20'-0"
REF: A100

0 2' 4' 8'
SCALE: 1/4" = 1' - 0"

ARCHITECTURAL SITE PLAN GENERAL NOTES

GN-1: FINISH GRADES, FOOTINGS, FOUNDATIONS, SIDEWALKS, CURBS, ETC. ARE SHOWN FOR DESIGN INTENT ONLY. SEE CIVIL AND STRUCTURAL DRAWINGS FOR ADDITIONAL INFORMATION.

GN-2: SITE WALLS AND SITE STAIRS, CURBS, ETC. - SEE CIVIL AND STRUCTURAL DRAWINGS FOR ADDITIONAL INFORMATION.

XX SHEET KEYNOTES

C10 PRECAST CONCRETE BENCH
C11 PRECAST CONCRETE BOLLARD (TYP. OF 6) - SEE DETAIL THIS SHEET
C12 FLAG POLE (TYP. OF 2)
C13 PRECAST CONCRETE BASE PANEL - GROUT SOLID BEHIND
E3 FLUSH MOUNTED FLAG POLE LIGHTS - SEE ELECTRICAL
R3 1/2" PT PLYWOOD SHEATHING
R10 PARAPET BLOCKING
R49 ROOF BELOW
R50 PREFABRICATED METAL CANOPY SYSTEM
R51 2" x 6" FASCIA BY CANOPY MANUFACTURER - ALL SIDES
R52 EXTRUDED ALUMINUM DECK
R56 TIE CANOPY DRAINAGE INTO DOWNSPOUT FROM ROOF
R57 DOWNSPOUT - COLLECT INSIDE PREFABRICATED CANOY COLUMN AND TIE TO STORM SYSTEM - SEE CIVIL FOR CONTINUATION
S6 6" METAL STUD FRAMING
S7 8" X 4" BEAM - BY CANOPY MANUFACTURER. SEE STRUCTURAL FOR COLONNADE CONNECTION
S8 8" X 4" COLUMN - BY CANOPY MANUFACTURER
S11 DIAGONAL STRUT - BY CANOPY MANUFACTURER
S51 STEEL COLUMN - SEE STRUCTURAL DRAWINGS
S52 STEEL BEAM - SEE STRUCTURAL DRAWINGS
W3 METAL COMPOSITE MATERIAL (MCM) JOINT CLIP W/ SEALANT
W5 METAL COMPOSITE MATERIAL (MCM) PANEL
W6 PREFINISHED METAL COPING

SPECTRUM DESIGN
architects | engineers

Plaza Suite 1
10 Church Avenue, SE
Roanoke, VA 24011

540.342.6001
spectrumpc.com

BEDFORD COUNTY SHERIFF'S OFFICE EXPANSION

SPECTRUM DESIGN PROJECT NO.: **24112**

COMMONWEALTH OF VIRGINIA
TRAVIS ROOKSTOOL
Lic. No. 17288
05.04.2026
ARCHITECT

PROJ. MGR.:	CHECKED BY:	DRAWN BY:
JM	GEG	TLR, MIG

SHEET ISSUE DATE:
05.04.2026

PROJECT PHASE:
BID DOCUMENTS

SHEET REVISIONS:

KEY PLAN:

PLAN NORTH SITE NORTH

SHEET NAME:
ARCHITECTURAL SITE PLAN

SHEET NUMBER:
A100

ORIGINAL SIZE - ARCH E1 (30X42) | 5/4/2026 9:20:10 AM
C:\Users\rookstool\SPECTRUM\OneDrive - Spectrum Design PC\Documents\24112 Arch Sheet\Bdg Control_rookstool\spec\Dumpr.ccm\r1

FLOOR PLAN GENERAL NOTES

GN-1: DIMENSION GUIDELINES:
- NEW CONSTRUCTION = PLAN DIMENSIONS ARE TO FACE OF FRAMING MEMBERS AT GWB, FACE OF MASONRY, AND CENTERLINE OF STRUCTURAL GRID U.N.O.
- EXISTING CONSTRUCTION = PLAN DIMENSIONS ARE TO FACE OF FINISH OF EXISTING WALLS TO REMAIN U.N.O.
- PLUMBING FIXTURES = PLAN DIMENSIONS ARE FROM FACE OF FINISH (GWB, TILE, ETC) TO CENTERLINE OF FIXTURE.
- "CLEAR" = DIMENSIONS ARE TO FACE OF FINISH (GWB, TILE, ETC).

GN-2: WHERE PARTITIONS OF DIFFERENT THICKNESSES ABUT OR ADJOIN IN THE SAME LOCATION, THE EXPOSED / FINISH FACES SHALL BE INSTALLED FLUSH / ALIGNED.

GN-3: SEE LIFE SAFETY PLANS FOR FIRE EXTINGUISHER CABINET TYPES AND LOCATIONS.

GN-4: SEE FINISH PLANS FOR TILE LOCATIONS.

XX SHEET KEYNOTES

A1	ALIGN FINISH FACE OF WALL WITH WINDOW OPENING
A4	TOWER FOR AUTO OPERATOR, CARD READER, AND AI PHONE. COORDINATE EXACT LOCATION AND ARRANGEMENT WITH A/E
G1	PREFINISHED ALUMINUM STOREFRONT SYSTEM
R3	1/2" PT PLYWOOD SHEATHING
R8	PREFINISHED METAL DOWNSPOUT - 4X4 (TYP)
R50	PREFABRICATED METAL CANOPY SYSTEM
R84	SEALANT
S51	STEEL COLUMN - SEE STRUCTURAL DRAWINGS
W3	METAL COMPOSITE MATERIAL (MCM) JOINT CLIP W/ SEALANT
W5	METAL COMPOSITE MATERIAL (MCM) PANEL
W31	INFILL OPENING IN WALL WITH STUDS AS REQUIRED TO MATCH ADJACENT STRUCTURE. PROVIDE 5/8" GWB TO FLUSH WITH ADJACENT FINISH SURFACE AND PAINT
W60	2x CONTINUOUS PT WOOD BLOCKING
W71	SELF ADHERED AIR / VAPOR BARRIER - EXTEND OVER BLOCKING & WRAP INSIDE OPENING
W92	PREFINISHED BRAKE METAL - MATCH STOREFRONT COLOR AND WRAP INSIDE OPENING

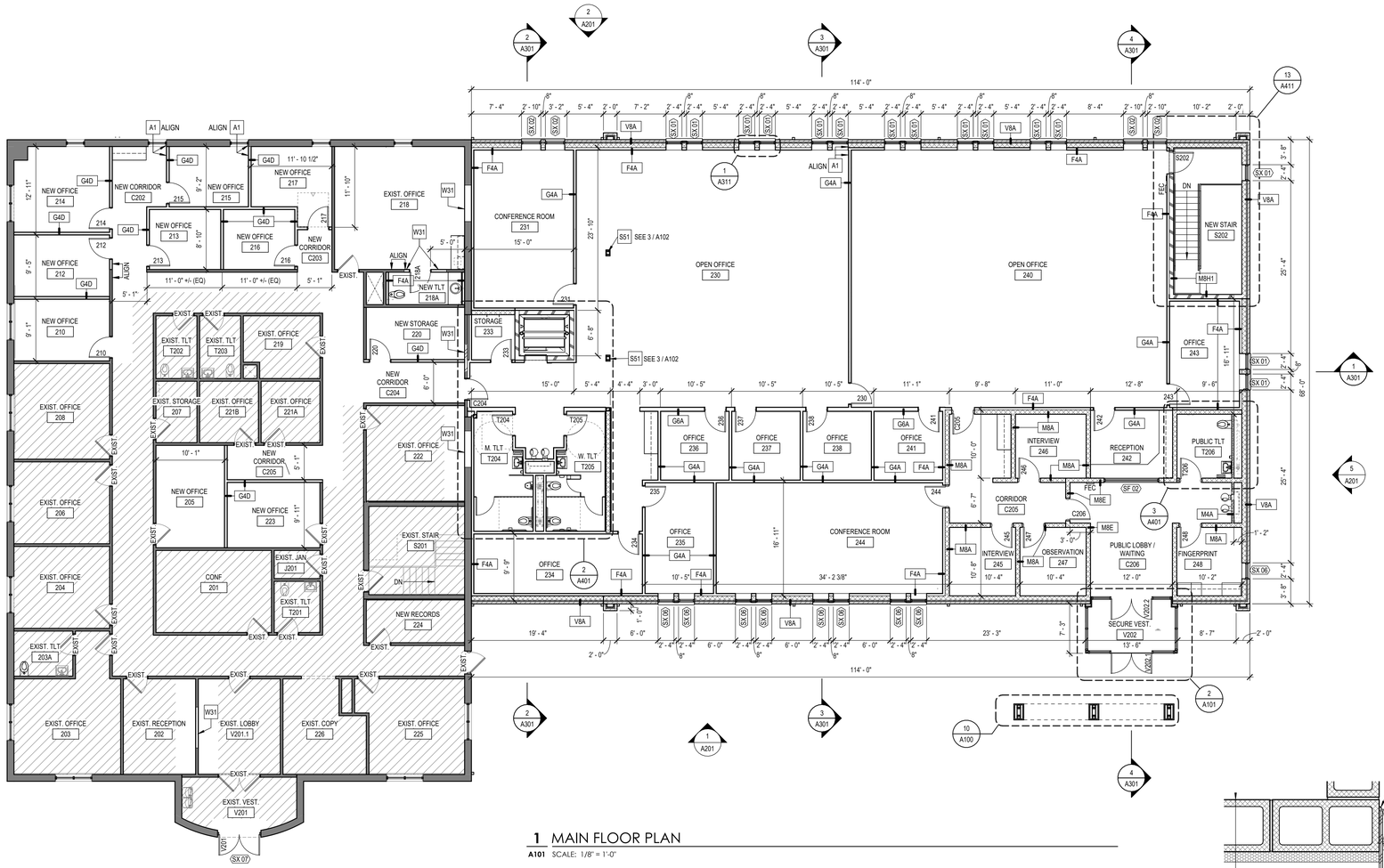

1 MAIN FLOOR PLAN
A101 SCALE: 1/8" = 1'-0"

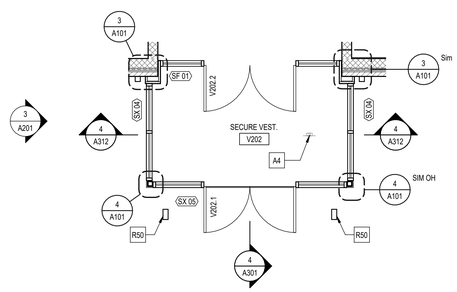

2 ENLARGED PLAN - VESTIBULE
A101 SCALE: 1/4" = 1'-0"
REF: A101

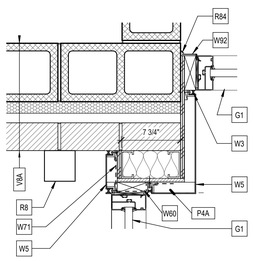

3 PLAN DETAIL
A101 SCALE: 1 1/2" = 1'-0"
REF: A101

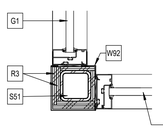

4 PLAN DETAIL
A101 SCALE: 1 1/2" = 1'-0"
REF: A101

FLOOR PLAN LEGEND

- EXISTING WALLS TO REMAIN
- NEW WALLS TO BE CONSTRUCTED
- HATCHED AREAS GENERALLY INDICATE SPACES WHERE NO NEW WORK OCCURS, HOWEVER LIMITED MEP WORK MAY BE REQUIRED. HATCHED AREAS DO NOT INDICATE SPECIFIC LIMITS OF NEW WORK
- EXISTING DOOR
- NEW DOOR

MINIMUM DOOR CLEARANCE LEGEND

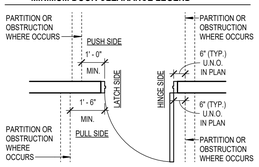

ANSI 117.1 2017
WHERE LATCH SIDE OF DOORWAYS ARE LOCATED ADJACENT TO A PERPENDICULAR PARTITION AND NOT OTHERWISE DIMENSIONED:

- PUSH SIDE - PROVIDE 1'-0" MIN. CLEAR BETWEEN INSIDE EDGE OF FRAME OPENING AND FINISH FACE OF ADJACENT PARTITION.
- PULL SIDE - PROVIDE 1'-6" MIN. CLEAR BETWEEN INSIDE EDGE OF FRAME OPENING AND FINISH FACE OF ADJACENT PARTITION.

0 2' 4' 8'
SCALE: 1/4" = 1' - 0"

SPECTRUM DESIGN
architects | engineers

Plaza Suite 1
10 Church Avenue, SE
Roanoke, VA 24011

540.342.6001
spectrumpc.com

BEDFORD COUNTY SHERIFF'S OFFICE EXPANSION

SPECTRUM DESIGN PROJECT NO.: **24112**

COMMONWEALTH OF VIRGINIA
TRAVIS ROOKSTOOL
Lic. No. 17288
05.04.2026
ARCHITECT

PROJ. MGR.:	CHECKED BY:	DRAWN BY:
JM	GEG	TLR, MIG

SHEET ISSUE DATE:
05.04.2026

PROJECT PHASE:
BID DOCUMENTS

SHEET REVISIONS:

PLAN NORTH SITE NORTH

SHEET NAME:
MAIN FLOOR PLAN

SHEET NUMBER:
A101

ORIGINAL SIZE: ARCH E1 (30"x42") | 5/4/2026 9:55:17 AM
C:\Users\bookstool\DESTINUM\OneDrive - Spectrum Design PC\Documents\24112 Arch Sheet\R24_Central_bookstool\spectrum_central.rvt

FLOOR PLAN GENERAL NOTES

GN-1: DIMENSION GUIDELINES:
- NEW CONSTRUCTION = PLAN DIMENSIONS ARE TO FACE OF FRAMING MEMBERS AT GWB, FACE OF MASONRY, AND CENTERLINE OF STRUCTURAL GRID U.N.O.
- EXISTING CONSTRUCTION = PLAN DIMENSIONS ARE TO FACE OF FINISH OF EXISTING WALLS TO REMAIN U.N.O.
- PLUMBING FIXTURES = PLAN DIMENSIONS ARE FROM FACE OF FINISH (GWB, TILE, ETC) TO CENTERLINE OF FIXTURE.
- "CLEAR" = DIMENSIONS ARE TO FACE OF FINISH (GWB, TILE, ETC).

GN-2: WHERE PARTITIONS OF DIFFERENT THICKNESSES ABUT OR ADJOIN IN THE SAME LOCATION, THE EXPOSED / FINISH FACES SHALL BE INSTALLED FLUSH / ALIGNED.

GN-3: SEE LIFE SAFETY PLANS FOR FIRE EXTINGUISHER CABINET TYPES AND LOCATIONS.

GN-4: SEE FINISH PLANS FOR TILE LOCATIONS.

XX SHEET KEYNOTES

A5	48"W x 72"H MIRROR PANELS WALL MOUNTED 18" AFF FOR LENGTH OF WALL. SEE SPECIFICATIONS FOR MORE INFORMATION
A6	PROVIDE BLOCKING AS REQUIRED FOR MOUNTING DISPLAY, TYPICAL
A81	OPERABLE PARTITION
G11	FRAMED OPENING TO REMAIN
M1	MECHANICAL EQUIPMENT OR DUCTWORK - SEE MECHANICAL DRAWINGS
S6	6" METAL STUD FRAMING
S51	STEEL COLUMN - SEE STRUCTURAL DRAWINGS
W10	5/8" GWB - PAINT
W31	INFILL OPENING IN WALL WITH STUDS AS REQUIRED TO MATCH ADJACENT STRUCTURE. PROVIDE 5/8" GWB TO FLUSH WITH ADJACENT FINISH SURFACE AND PAINT
W32	NEW GWB WALL ON TOP OF EXISTING CMU WALL

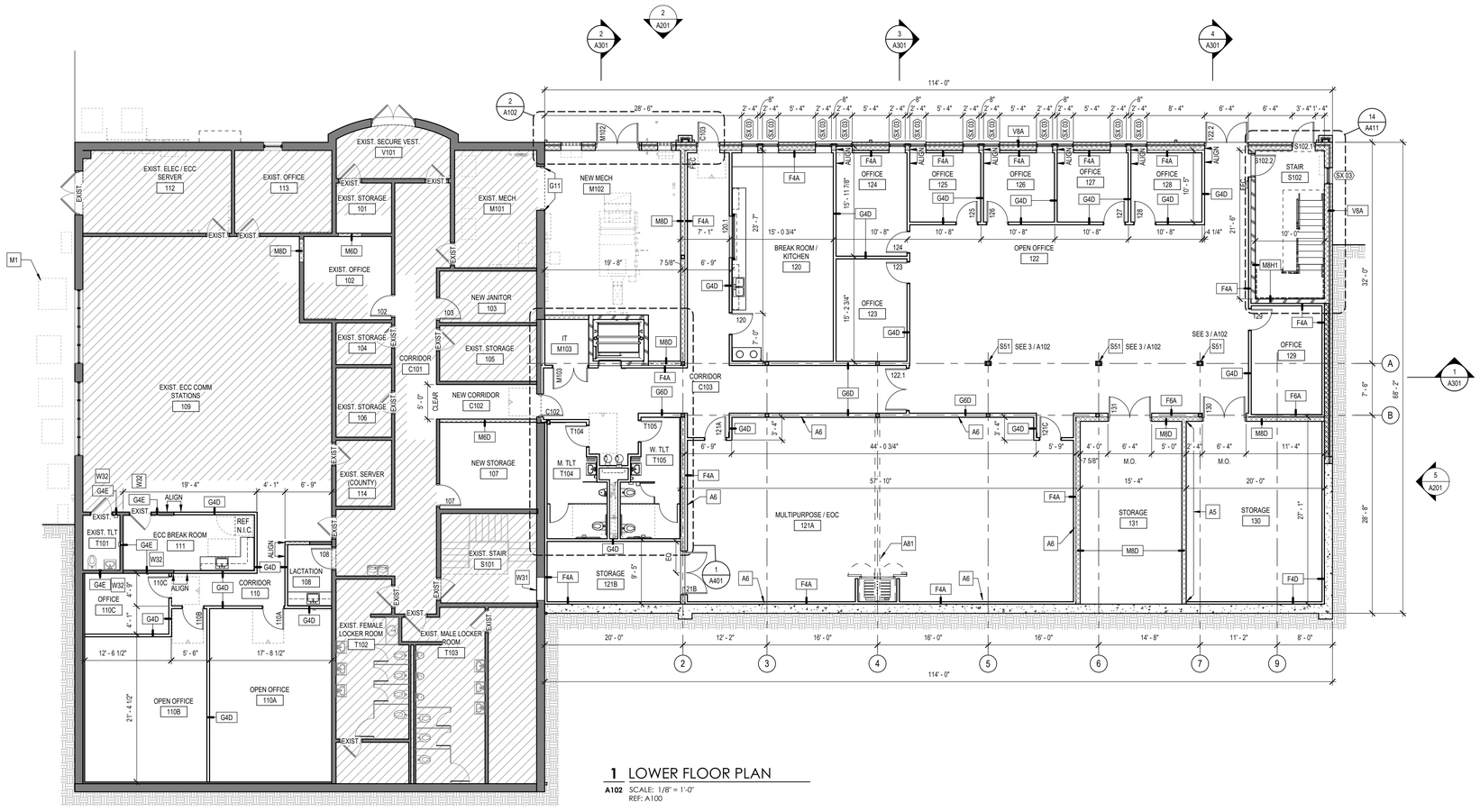

1 LOWER FLOOR PLAN

A102 SCALE: 1/8" = 1'-0"
REF: A100

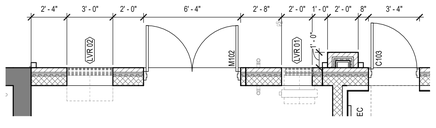

2 PARTIAL ENLARGED PLAN

A102 SCALE: 1/4" = 1'-0"
REF: A102

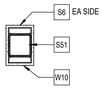

3 INTERIOR COLUMN WRAP (TYP.)

A102 SCALE: 3/4" = 1'-0"
REF: A401

FLOOR PLAN LEGEND

- EXISTING WALLS TO REMAIN
- NEW WALLS TO BE CONSTRUCTED
- HATCHED AREAS GENERALLY INDICATE SPACES WHERE NO NEW WORK OCCURS, HOWEVER LIMITED MEP WORK MAY BE REQUIRED. HATCHED AREAS DO NOT INDICATE SPECIFIC LIMITS OF NEW WORK
- EXISTING DOOR
- NEW DOOR

MINIMUM DOOR CLEARANCE LEGEND

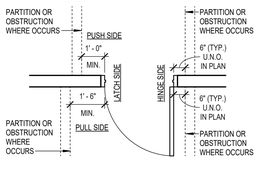

ANSI 117.1 2017
WHERE LATCH SIDE OF DOORWAYS ARE LOCATED ADJACENT TO A PERPENDICULAR PARTITION AND NOT OTHERWISE DIMENSIONED:

- PUSH SIDE - PROVIDE 1'-0" MIN. CLEAR BETWEEN INSIDE EDGE OF FRAME OPENING AND FINISH FACE OF ADJACENT PARTITION.
- PULL SIDE - PROVIDE 1'-6" MIN. CLEAR BETWEEN INSIDE EDGE OF FRAME OPENING AND FINISH FACE OF ADJACENT PARTITION.

0 4' 8' 16'
SCALE: 1/8" = 1' - 0"

SPECTRUM DESIGN
architects | engineers

Plaza Suite 1
10 Church Avenue, SE
Roanoke, VA 24011

540.342.6001
spectrumpc.com

BEDFORD COUNTY SHERIFF'S OFFICE EXPANSION

SPECTRUM DESIGN PROJECT NO.: **24112**

COMMONWEALTH OF VIRGINIA
TRAVIS ROOKSTOOL
Lic. No. 17288
05.04.2026
ARCHITECT

PROJ. MGR.:	CHECKED BY:	DRAWN BY:
JM	GEG	TLR, MIG

SHEET ISSUE DATE:
05.04.2026

PROJECT PHASE:
BID DOCUMENTS

SHEET REVISIONS:

PLAN NORTH SITE NORTH

SHEET NAME:
LOWER FLOOR PLAN

SHEET NUMBER:
A102

ORIGINAL SIZE - ARCH E1 (30X42) | 04/05/26 9:05:22 AM
C:\Users\rookstool\SPECTRUM\OneDrive - Spectrum Design PC\Documents\24112 Arch Sheet\Bldg Content_rookstool\spectrumpc.com.rvt

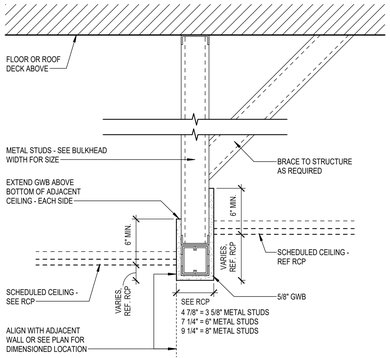

B1 BULKHEAD DETAIL

A121 SCALE: 1 1/2" = 1'-0"

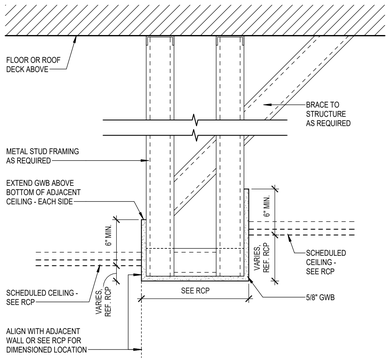

B3 BULKHEAD DETAIL

A121 SCALE: 1 1/2" = 1'-0"

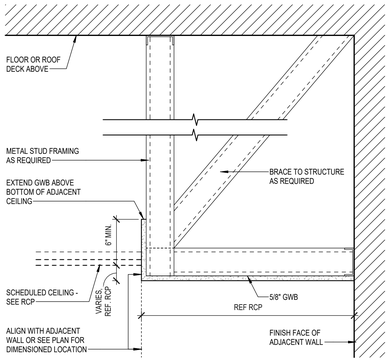

B5 BULKHEAD DETAIL

A121 SCALE: 1 1/2" = 1'-0"

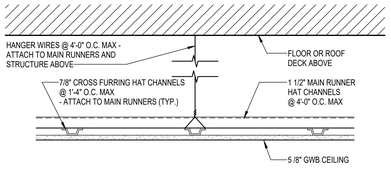

TYP. SUSPENDED GWB CEILING DETAIL

SCALE: 1 1/2" = 1'-0"

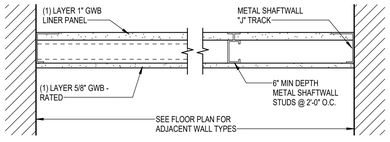

2 HORIZONTAL SHAFTWALL CEILING (GWB-SH)

A121 SCALE: 1 1/2" = 1'-0"

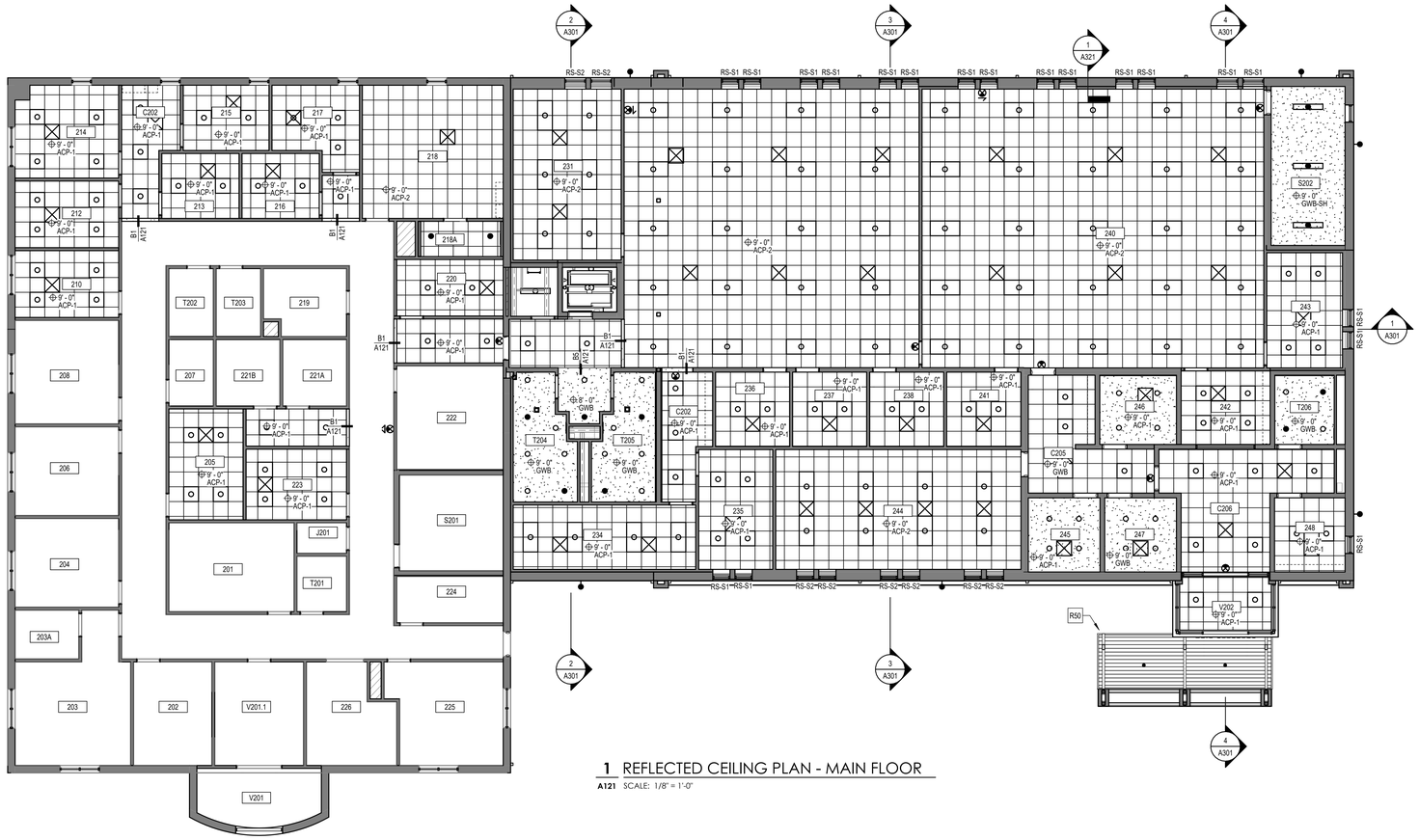

1 REFLECTED CEILING PLAN - MAIN FLOOR

A121 SCALE: 1/8" = 1'-0"

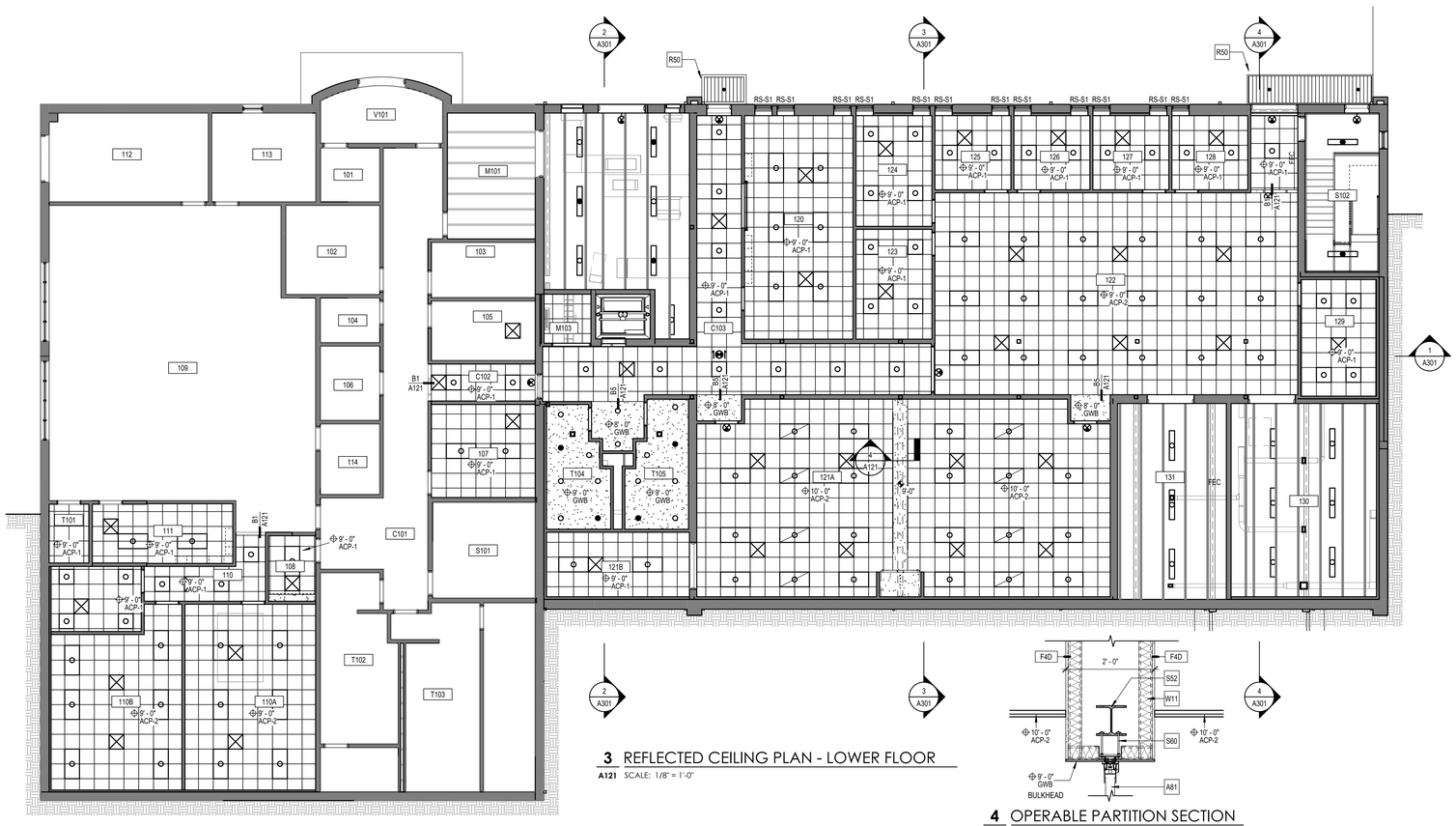

3 REFLECTED CEILING PLAN - LOWER FLOOR

A121 SCALE: 1/8" = 1'-0"

4 OPERABLE PARTITION SECTION

A121 SCALE: 3/4" = 1'-0"
REF: A121

REFLECTED CEILING GENERAL NOTES

GN-1: MECHANICAL SUPPLY AND RETURN GRILLES, ELECTRICAL FIXTURES AND EQUIPMENT, AND SPRINKLER HEADS (NOT SHOWN) TO BE CENTERED IN ACP OR WITHIN SPACE AT GWB CEILINGS. EXISTING SPRINKLER SYSTEM TO BE MODIFIED AS REQUIRED TO PROVIDE A FULLY FUNCTIONAL SYSTEM. EXISTING AND/OR NEW SPRINKLER HEADS TO BE RAISED OR LOWERED AS REQUIRED TO COORDINATE W/ NEW CEILING HEIGHTS & CONDITIONS. SPRINKLER CONTRACTOR TO VERIFY COVERAGE OF EXISTING HEADS & MODIFY ACCORDINGLY TO INSURE THAT THE SYSTEM MEETS ALL NATIONAL, STATE, & LOCAL BUILDING CODES.

GN-2: DIMENSION GUIDELINES:
• REFLECTED CEILING PLAN DIMENSIONS ARE FROM FACE OF WALL FINISH (GWB, CMU, ETC) TO FACE OF BULKHEAD FINISH , CENTERLINE OF ACP GRID, CENTERLINE OF STRUCTURAL GRID, ETC. U.N.O.

GN-3: SUPPORT FRAMING SHOWN AT GWB CEILINGS AND BULKHEADS INDICATES DIMENSIONAL DESIGN INTENT. AT CONTRACTOR'S OPTION, SUBSTITUTE SUSPENDED METAL GRID FRAMING SYSTEM FOR STUD FRAMING AT GWB . CONTRACTOR TO COORDINATE FRAMING AS REQUIRED FOR RECESSED AND SURFACE MOUNTED CEILING ELEMENTS, INCLUDING LIGHTS, BULKHEADS, TRANSITIONS, ROLLER SHADES, PROJECTORS, ETC.

GN-4: REFER TO MECHANICAL DRAWINGS FOR SIDEWALL MOUNTED SUPPLIES AND RETURNS NOT INDICATED ON RCP.

GN-5: REFER TO ELECTRICAL DRAWINGS FOR WALL MOUNTED AND UNDER CABINET FIXTURES AND SPEAKERS NOT INDICATED ON RCP.

GN-6: AT LOCATIONS WHERE ACP WILL BE 6" OR LESS IN WIDTH, USE A 2X4 ACP OF THE SAME TYPE AND MANUFACTURER. FOR EXAMPLE: IN LIEU OF A 6"X24" ACP NEXT TO A 24"X24" ACP, THE PANEL SHALL BE 30"X24" AND EXTEND TO THE WALL OR SOFFIT.

GN-7: PROVIDE ACCESS PANELS FOR ABOVE CEILING ACCESS AT GWB CEILINGS WHERE REQUIRED. SEE PLUMBING, MECHANICAL AND ELECTRICAL DRAWINGS FOR EQUIPMENT REQUIRING ACCESS PANELS.

GN-8: PAINT ALL EXPOSED GWB, EXPOSED STRUCTURE, AND DECK U.N.O. - SEE FINISH LEGEND AND SCHEDULE.

GN-9: SEE CASEWORK DRAWINGS FOR EXTENT OF BULKHEADS AT CASEWORK LOCATIONS.

GN-10: SEE WALL SECTIONS AND DETAILS FOR CEILING TERMINATIONS AT EXTERIOR WALL.

GN-11: PAINT COLORS NOTED ARE FOR THE BOTTOM AND SIDES OF BULKHEADS AND SOFFITS - SEE FINISH LEGEND AND SCHEDULE.

XX SHEET KEYNOTES

A81	OPERABLE PARTITION
R50	PREFABRICATED METAL CANOPY SYSTEM
S52	STEEL BEAM - SEE STRUCTURAL DRAWINGS
S60	STEEL SUPPORT RODS BOLTED TO STEEL BEAM
W11	SOUND ATTENTUATION BATTS - EXTEND TO DECK ABOVE

REFLECTED CEILING PLAN LEGEND

- GWB CEILING - PAINTED
- EXPOSED STRUCTURE AND METAL DECK ABOVE - PAINTED
- SUSPENDED ACOUSTICAL CEILING PANEL SYSTEM (ACP)
- 2X4 LIGHT FIXTURE, RE: ELEC
- 2X2 LIGHT FIXTURE, RE: ELEC
- PENDANT LIGHT FIXTURE
- WALL MOUNTED LIGHT
- GROUND MOUNTED UP-LIGHT
- EXIT SIGN, RE: ELEC
- AS — AUDIO ENHANCEMENT SYSTEM SPEAKER
- S — CEILING MOUNTED SPEAKER
- OC — OCCUPANCY SENSOR
- HVAC SUPPLY DIFFUSER, RE: MECH
- HVAC RETURN GRILLE, RE: MECH
- ABOVE FINISH FLOOR (A.F.F.)
- ROLLER SHADE - SINGLE
- ROLLER SHADE - DOUBLE (RS-R1M)
  - R = RECESSED
  - S = SURFACE MOUNT
  - NO. OF ROLLERS
  - "M" IF MOTORIZED
- NOTE: REFERENCE FRAMED OPENING ELEVATIONS FOR CORRESPONDING LENGTH

REFLECTED CEILING PLAN WALL LEGEND

- WALLS AND PARTITIONS TERMINATING ABOVE CEILING
- INTERIOR PARTITIONS TERMINATING BELOW CEILING

0 4' 8' 16'
SCALE: 1/8" = 1' - 0"

SPECTRUM DESIGN
architects | engineers

Plaza Suite 1
10 Church Avenue, SE
Roanoke, VA 24011

540.342.6001
spectrumpc.com

BEDFORD COUNTY SHERIFF'S OFFICE EXPANSION

SPECTRUM DESIGN PROJECT NO.: **24112**

COMMONWEALTH OF VIRGINIA
TRAVIS ROOKSTOOL
Lic. No. 17288
05.04.2026
ARCHITECT

PROJ. MGR.: **JM**
CHECKED BY: **GEG**
DRAWN BY: **TLR, MIG**

SHEET ISSUE DATE:
05.04.2026

PROJECT PHASE:
BID DOCUMENTS

SHEET REVISIONS:

PLAN NORTH SITE NORTH

SHEET NAME:
REFLECTED CEILING PLANS

SHEET NUMBER:
A121

ORIGINAL SIZE: ARCH E1 (30X42) | 3/10/2026 2:05:48 AM
C:\Users\tookstool\AECOM\AecomOneDrive - Spectrum Design PC\Documents\24112 Arch Sheet\R24 Central_tookstool@spectrumpc.com.rvt

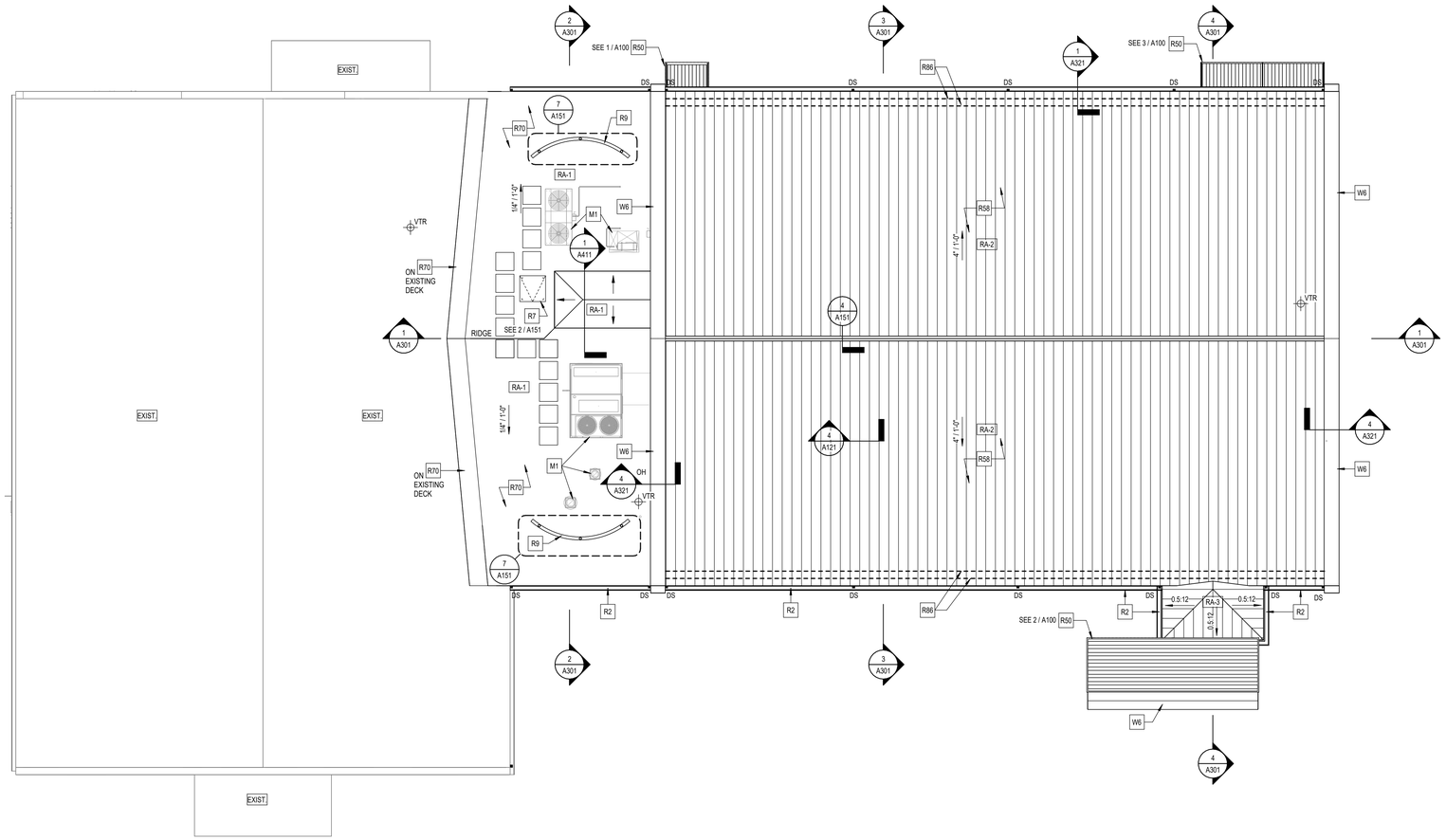

1 ROOF PLAN

A151 SCALE: 1/8" = 1'-0"
REF: A201

ROOF PLAN GENERAL NOTES

GN-1: SEE ROOF ASSEMBLIES FOR ROOF CONSTRUCTION U.N.O.

GN-2: PROVIDE CRICKETS AT ALL OBSTRUCTIONS TO MAINTAIN POSITIVE DRAINAGE.

GN-3: ALL BLOCKING SHALL BE PRESSURE TREATED.

GN-4: FLASH AND SEAL ALL PENETRATIONS AND CURBS PER ROOFING MANUFACTURER'S RECOMMENDED DETAILS.

GN-5: COORDINATE ALL ROOF PENETRATIONS WITH STRUCTURAL, PLUMBING, MECHANICAL, AND ELECTRICAL DRAWINGS. SEE M.E.P. DRAWINGS FOR ADDITIONAL PENETRATIONS NOT SHOWN ON ARCHITECTURAL DRAWINGS.

GN-6: SEE PLUMBING DRAWINGS FOR ROOF DRAIN DIAMETER / SIZE.

GN-7: SLOPE ALL COPING TOWARDS ROOF U.N.O.

XX SHEET KEYNOTES

M1	MECHANICAL EQUIPMENT OR DUCTWORK - SEE MECHANICAL DRAWINGS
P11	VENT PIPE - SEE PLUMBING DRAWINGS
R2	6x6 PREFINISHED ALUMINUM GUTTER
R7	ROOF HATCH - 36" x 36"
R9	PREFABRICATED METAL ROOF SCREEN. SUBFRAMING AND SUPPORTS BY MANUFACTURER. SEE STRUCTURAL DETAILS FOR BUILDING ANCHORAGE
R41	PREMANUFACTURED ROOF HATCH
R42	PREMANUFACTURED ROOF HATCH GUARDRAIL
R50	PREFABRICATED METAL CANOPY SYSTEM
R58	PREFINISHED CONCEALED FASTENER STANDING SEAM METAL ROOF
R59	PREFINISHED METAL RIDGE CAP (UNVENTED)
R70	FLEXIBLE SHEET MEMBRANE ROOFING (FSM)
R71	BONDING ADHESIVE
R72	(1) LAYER 1/2" INSULATED COVERBOARD (R-2.5 MIN)
R73	POLYISO BOARD INSULATION - STAGGERED JOINTS
R74	VAPOR / AIR BARRIER MEMBRANE
R76	VAPOR RETARDER MEMBRANE
R80	CURB FLASHING
R81	TERMINATION BAR
R82	FSM FLASHING
R83	FASTENER AND PLATE
R84	SEALANT
R85	HEAT WELD AND SEALANT
R86	TWO ROWS SNOW RAILS - FULL LENGTH OF ROOF
R87	PREFABRICATED PIPE BOOT
R89	PREMANUFACTURED EQUIPMENT CURB
R95	STAINLESS STEEL BAND CLAMP
R96	CONDUIT, PIPE,POST, ETC.
R97	MIN. 2" POURABLE SEALER MOUND TO SHED WATER
R98	NON-SHRINK GROUT OR OTHER ACCEPTABLE FILLER MATERIAL
R99	MECHANICALLY ATTACHED METAL DAM
S52	STEEL BEAM - SEE STRUCTURAL DRAWINGS
S58	STEEL POST SUPPORT - BY ROOF SCREEN MANUFACTURER
S71	METAL ROOF DECK
S81	STEEL NON SLIP RUNGS @ 1'-0" O.C.
S82	2" WIDE x 1/2" THICK STEEL BAR STOCK VERTICAL SIDE MEMBERS
S83	STEEL WALL BRACKET
S84	STEEL FRAMING AROUND ROOF DECK OPENING - SEE STRUCTURAL DRAWINGS
W6	PREFINISHED METAL COPING
W60	2x CONTINUOUS PT WOOD BLOCKING
W90	SEE FLOOR PLAN FOR WALL TYPE

ROOF LEGEND

RA-00	ROOF ASSEMBLY TAG
DS	DOWNSPOUT (4" X 4" TYP)
	TAPERED INSULATION / CRICKETS
VTR	VENT THROUGH PIPE THROUGH ROOF
SL = 1/4 : 1'-0" (TYP U.N.O.)	ROOF SLOPE & DIRECTION
	MECHANICAL EQUIPMENT AND DUCTWORK MTD ON ROOF CURBS; SEE MECH
	NEW ROOF WALKWAY PADS; PROVIDE AS SHOWN ON EXISTING AND NEW ROOFS TYP

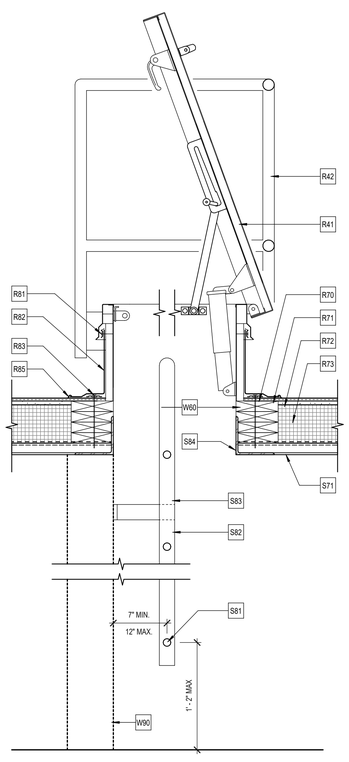

2 DOWNSPOUT TERMINATION (TYP.)

A151 SCALE: 1 1/2" = 1'-0"

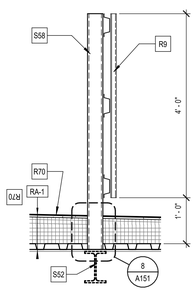

3 ROOF SCREEN - SECTION

A151 SCALE: 3/4" = 1'-0"
REF: A151

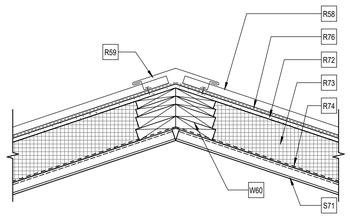

4 RIDGE DETAIL (TYP.)

A151 SCALE: 1 1/2" = 1'-0"
REF: A151

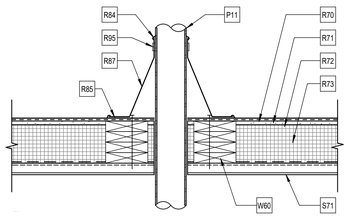

5 PREFABRICATED PIPE BOOT (TYP.)

A151 SCALE: 1 1/2" = 1'-0"

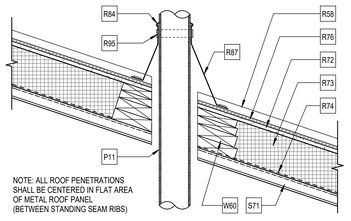

6 METAL ROOF PENETRATION (TYP.)

A151 SCALE: 1 1/2" = 1'-0"

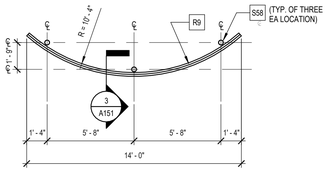

7 ROOF SCREEN - PLAN

A151 SCALE: 1/4" = 1'-0"
REF: A151

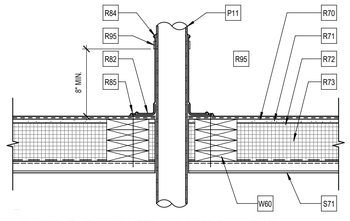

8 FIELD FLASH TERMINATION (TYP.)

A151 SCALE: 1 1/2" = 1'-0"

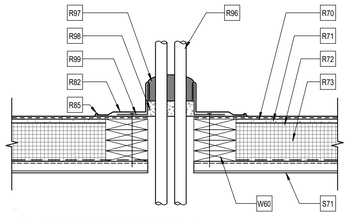

9 PITCH POCKET (TYP.)

A151 SCALE: 1 1/2" = 1'-0"

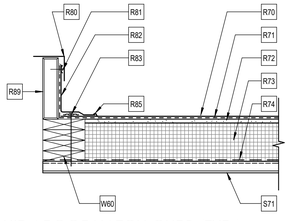

10 EQUIP / ROOF HATCH CURB (TYP.)

A151 SCALE: 1 1/2" = 1'-0"

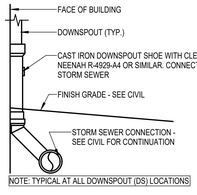

11 DOWNSPOUT TERMINATION (TYP.)

A151 SCALE: 3/4" = 1'-0"

0 4' 8' 16'
SCALE: 1/8" = 1'-0"

SPECTRUM DESIGN
architects | engineers

Plaza Suite 1
10 Church Avenue, SE
Roanoke, VA 24011

540.342.6001
spectrumpc.com

BEDFORD COUNTY SHERIFF'S OFFICE EXPANSION

SPECTRUM DESIGN PROJECT NO.: **24112**

COMMONWEALTH OF VIRGINIA
TRAVIS ROOKSTOOL
Lic. No. 17288
05.04.2026
ARCHITECT

PROJ. MGR.:	CHECKED BY:	DRAWN BY:
JM	GEG	TLR, MIG

SHEET ISSUE DATE:
05.04.2026

PROJECT PHASE:
BID DOCUMENTS

SHEET REVISIONS:

PLAN NORTH SITE NORTH

SHEET NAME:
ROOF PLAN

SHEET NUMBER:
A151

ORIGINAL SIZE: ARCH E1 (30X42) | 5/4/2026 10:31:05 AM
C:\Users\rookstool\DESTINATION\OneDrive - Spectrum Design PC\Documents\24112 Arch Sheet\R24_Central_bookshelf\plan\Roofplan.rvt

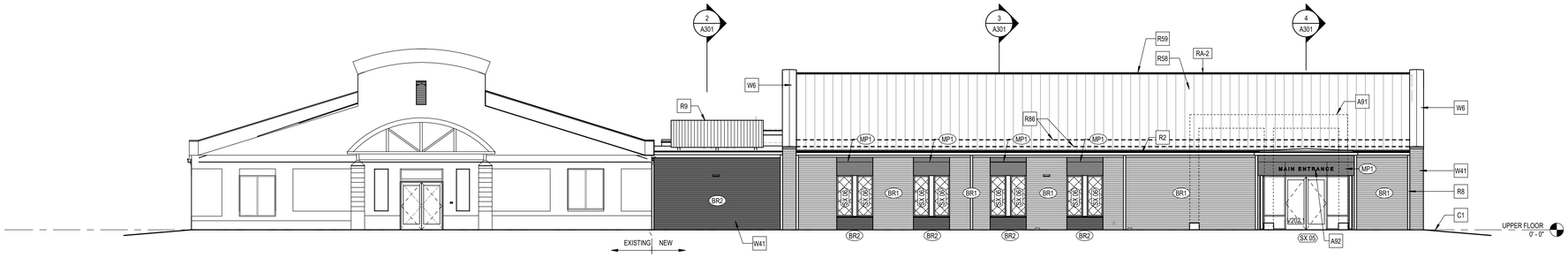

1 EAST ELEVATION

A201 SCALE: 1/8" = 1'-0"
REF: A101

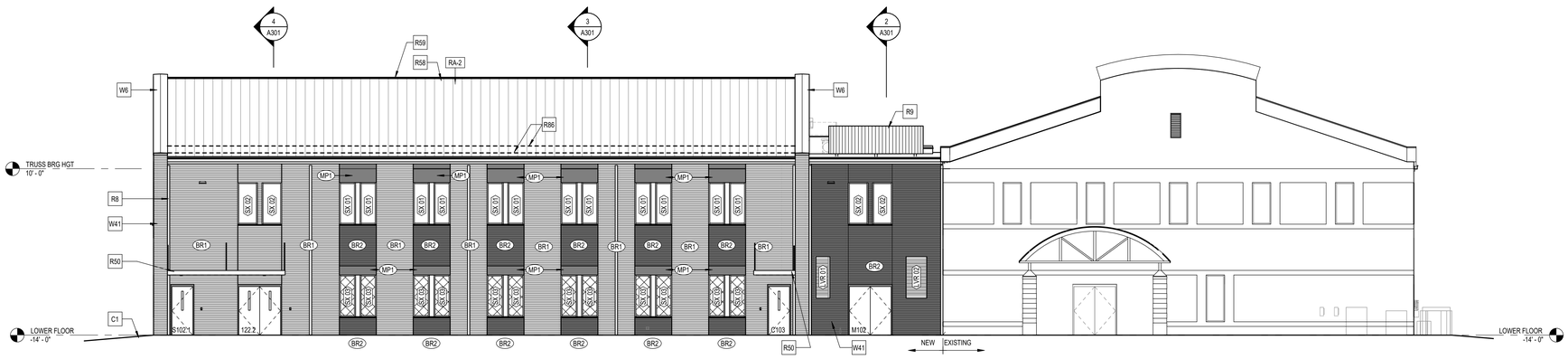

2 WEST ELEVATION

A201 SCALE: 1/8" = 1'-0"
REF: A101

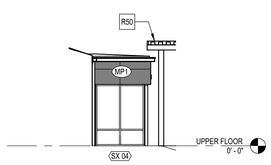

3 PARTIAL ELEVATION - VESTIBULE

A201 SCALE: 1/8" = 1'-0"
REF: A101

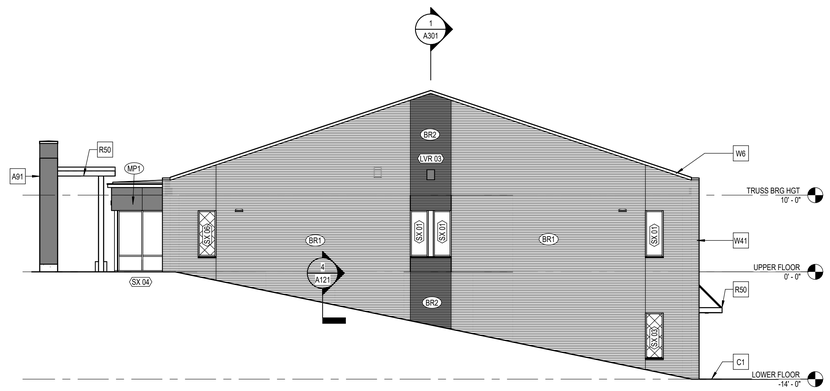

5 NORTH ELEVATION

A201 SCALE: 1/8" = 1'-0"
REF: A101

EXTERIOR ELEVATION GENERAL NOTES

GN-1: SEE ROOF ASSEMBLIES FOR ROOF CONSTRUCTION U.N.O.

GN-2: PROVIDE CRICKETS AT ALL OBSTRUCTIONS TO MAINTAIN POSITIVE DRAINAGE.

GN-3: ALL BLOCKING SHALL BE PRESSURE TREATED.

GN-4: FLASH AND SEAL ALL PENETRATIONS AND CURBS PER ROOFING MANUFACTURER'S RECOMMENDED DETAILS.

GN-5: COORDINATE ALL ROOF PENETRATIONS WITH STRUCTURAL, PLUMBING, MECHANICAL, AND ELECTRICAL DRAWINGS. SEE M.E.P. DRAWINGS FOR ADDITIONAL PENETRATIONS NOT SHOWN ON ARCHITECTURAL DRAWINGS.

GN-6: SEE PLUMBING DRAWINGS FOR ROOF DRAIN DIAMETER / SIZE.

GN-7: SLOPE ALL COPING TOWARDS ROOF U.N.O.

XX SHEET KEYNOTES

A91 COLONNADE - SEE A004 FOR DETAILS
A92 BUILDING MOUNTED SIGNAGE - 6" HIGH CUT ALUMINUM LETTERS
C1 FINISH GRADE - SEE CIVIL DRAWINGS
R2 6x6 PREFINISHED ALUMINUM GUTTER
R8 PREFINISHED METAL DOWNSPOUT - 4X4 (TYP)
R9 PREFINISHED METAL SCREEN PANEL. PROVIDE SUBFRAMING AND SUPPORTS PER MANUFACTURER'S DIRECTION. SEE STRUCTURAL DETAILS FOR BUILDING ANCHORAGE
R50 PREFABRICATED METAL CANOPY SYSTEM
R58 PREFINISHED CONCEALED FASTENER STANDING SEAM METAL ROOF
R59 PREFINISHED METAL RIDGE CAP (UNVENTED)
R86 TWO ROWS SNOW RAILS - FULL LENGTH OF ROOF
W6 PREFINISHED METAL COPING
W41 BRICK VENEER

XX EXTERIOR ELEVATION MATERIAL LEGEND

BRICK:
BR1: BRICK TYPE 1 (MATCH EXISTING)
BR2: BRICK TYPE 2

METAL PANEL:
MP1: ALUMINUM COMPOSITE METAL PANEL TYPE 1
MP4: BRAKE METAL (MATCH STOREFRONT)

FRAMED OPENINGS INDICATOR

FRAME TYPE → CW = CURTAIN WALL
LVR = LOUVER
HM = HOLLOW METAL
SF = STOREFRONT (INTERIOR)
SX = STOREFRONT (EXTERIOR)
WN = WINDOW

SF XX
FRAME NO.
XX FRAME DEPTH

GLAZING / PANEL LEGEND

GL-1 = 1/4" CLEAR
GL-2 = 1" INSULATED
GL-3 = 1" INSULATED W/ SAFETY FILM

0 4' 8' 16'
SCALE: 1/8" = 1' - 0"

SPECTRUM DESIGN
architects | engineers

Plaza Suite 1
10 Church Avenue, SE
Roanoke, VA 24011

540.342.6001
spectrumpc.com

BEDFORD COUNTY SHERIFF'S OFFICE EXPANSION

SPECTRUM DESIGN PROJECT NO.: **24112**

COMMONWEALTH OF VIRGINIA
TRAVIS ROOKSTOOL
Lic. No. 17288
05.04.2026
ARCHITECT

PROJ. MGR.: **JM**
CHECKED BY: **GEG**
DRAWN BY: **TLR, MIG**

SHEET ISSUE DATE:
05.04.2026

PROJECT PHASE:
BID DOCUMENTS

SHEET REVISIONS:

PLAN NORTH
SITE NORTH

SHEET NAME:
EXTERIOR ELEVATIONS

SHEET NUMBER:
A201

ORIGINAL SIZE - ARCH E1 (30X42) | 5/5/2026 10:00:25 AM
C:\Users\tookstool\AppData\Local\Temp\AcPublish\OneDrive - Spectrum Design PC\Documents\24112 Arch Shelf\R24_Central_tookstool@spectrumpc.com.rvt

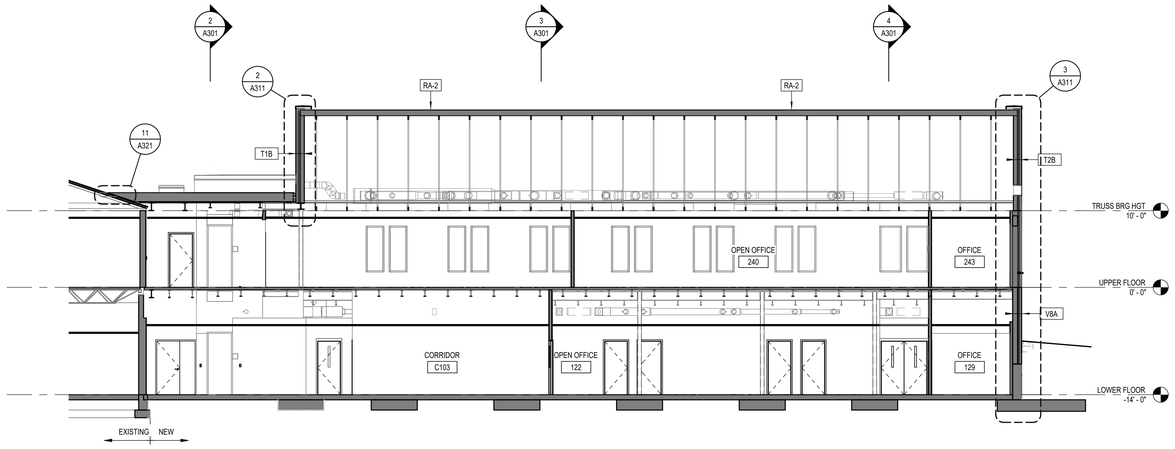

1 BUILDING SECTION

A301 SCALE: 1/8" = 1'-0"
REF: A101

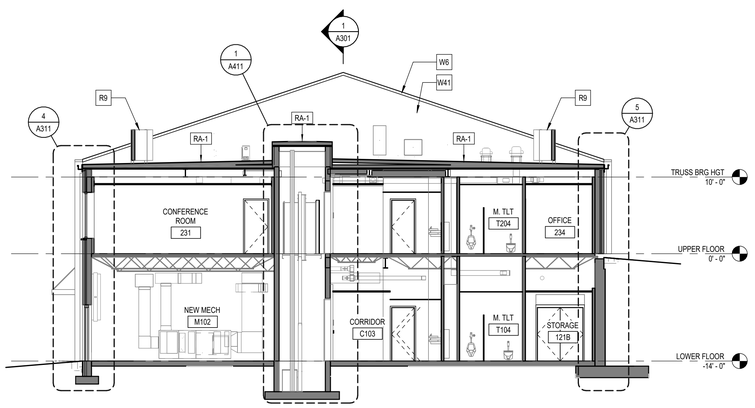

2 BUILDING SECTION

A301 SCALE: 1/8" = 1'-0"
REF: A101

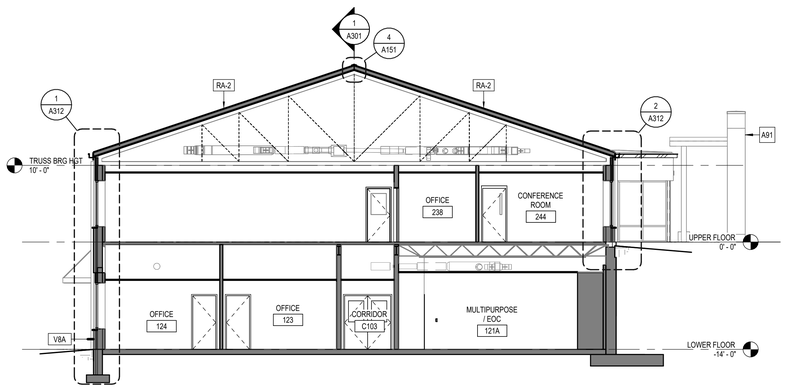

3 BUILDING SECTION

A301 SCALE: 1/8" = 1'-0"
REF: A101

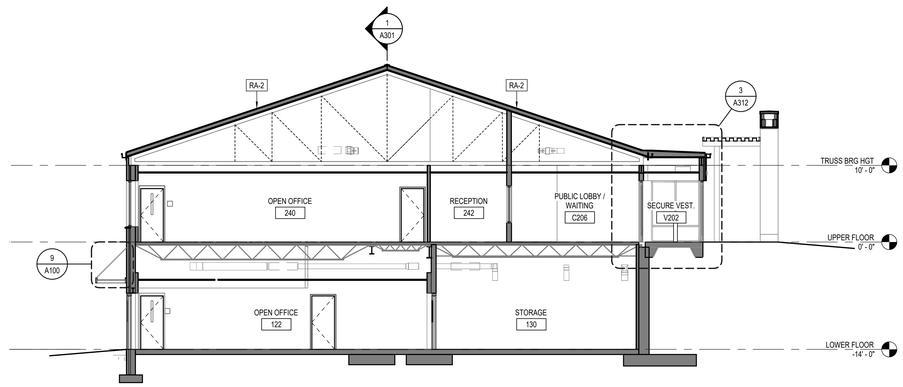

4 BUILDING SECTION

A301 SCALE: 1/8" = 1'-0"
REF: A101

WALL SECTION & DETAILS GENERAL NOTES

GN-1: FINISH GRADES, FOOTINGS, AND FOUNDATIONS ARE SHOWN FOR ILLUSTRATION ONLY - SEE CIVIL AND STRUCTURAL DRAWINGS.

GN-2: SEE STRUCTURAL DRAWINGS FOR MASONRY REINFORCING, GROUTING, AND BOND BEAMS

GN-3: PROVIDE COLD FORMED METAL FRAMING KICKERS AS REQUIRED.

GN-4: SEE ASSEMBLIES SHEET FOR INTERIOR WALL AND PARTITION TYPES, EXTERIOR WALLS, AND ROOF TYPES.

XX SHEET KEYNOTES

A91 COLONNADE - SEE A004 FOR DETAILS

R9 PREFINISHED METAL SCREEN PANEL. PROVIDE SUBFRAMING AND SUPPORTS PER MANUFACTURER'S DIRECTION. SEE STRUCTURAL DETAILS FOR BUILDING ANCHORAGE

W6 PREFINISHED METAL COPING

W41 BRICK VENEER

SPECTRUM DESIGN
architects | engineers

Plaza Suite 1
10 Church Avenue, SE
Roanoke, VA 24011

540.342.6001
spectrumpc.com

BEDFORD COUNTY SHERIFF'S OFFICE EXPANSION

SPECTRUM DESIGN PROJECT NO.: **24112**

COMMONWEALTH OF VIRGINIA
TRAVIS ROOKSTOOL
Lic. No. 17288
05.04.2026
ARCHITECT

PROJ. MGR.: **JM**
CHECKED BY: **GEG**
DRAWN BY: **TLR, MIG**

SHEET ISSUE DATE:
05.04.2026

PROJECT PHASE:
BID DOCUMENTS

SHEET REVISIONS:

PLAN NORTH
SITE NORTH

SHEET NAME:
BUILDING SECTIONS

SHEET NUMBER:
A301

0 4' 8' 16'
SCALE: 1/8" = 1' - 0"

ORIGINAL SIZE: ARCH E1 (30X42) | 5/5/2026 10:00:04 AM
C:\Users\bookstoo\DATA\TRAVIS\OneDrive - Spectrum Design PC\Documents\24112 Arch Sheet\R24 Central_bookstoo@spectrumpc.com.rvt

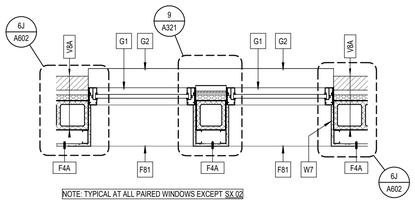

NOTE: TYPICAL AT ALL PAIRED WINDOWS EXCEPT SX.02

1 PAIRED WINDOW PLAN VIEW (TYP)

A311 SCALE: 3/4" = 1'-0"
REF: A101

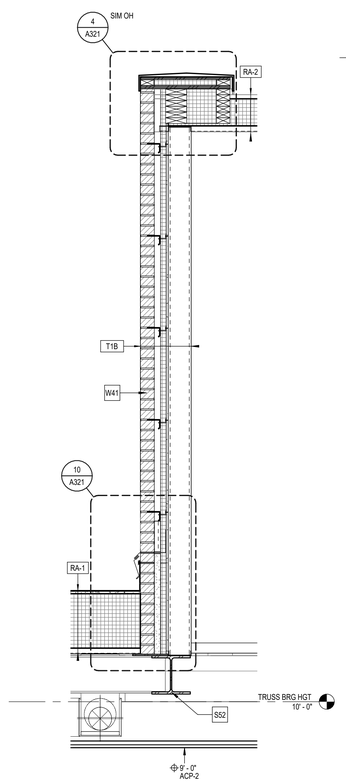

2 WALL SECTION

A311 SCALE: 3/4" = 1'-0"
REF: A301

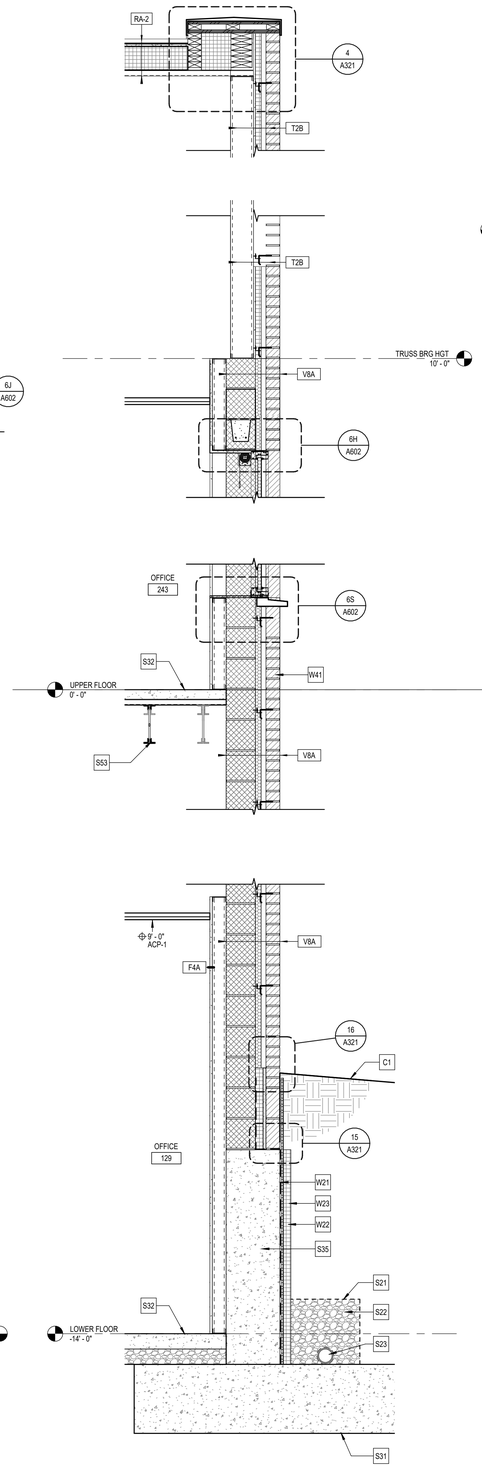

3 WALL SECTION

A311 SCALE: 3/4" = 1'-0"
REF: A301

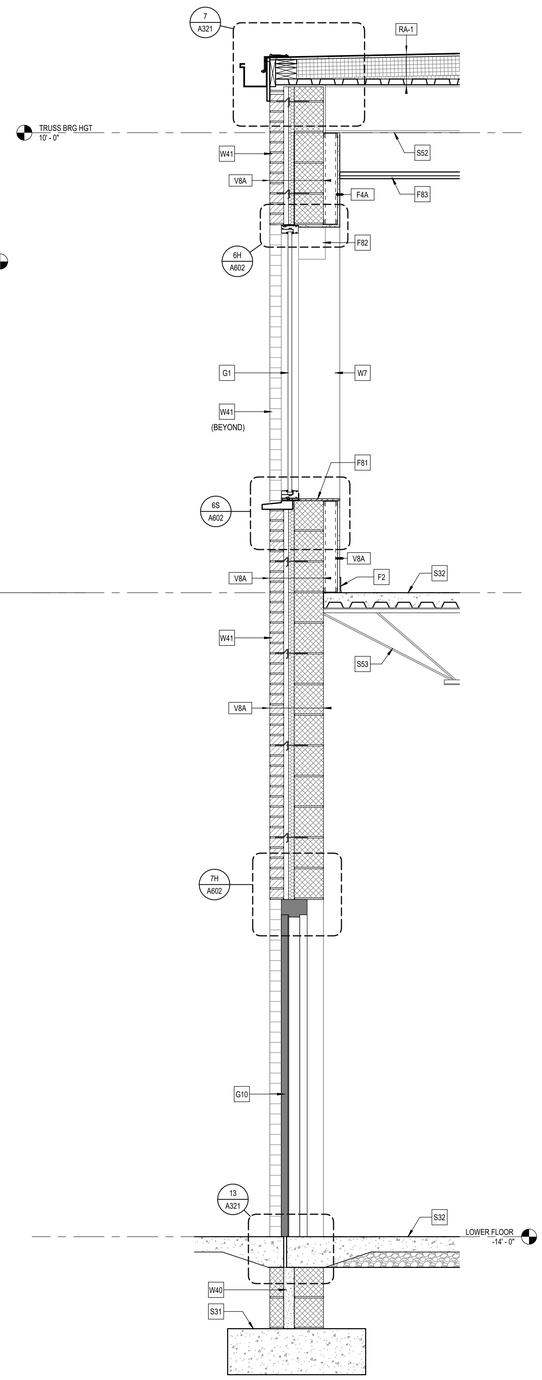

4 WALL SECTION

A311 SCALE: 3/4" = 1'-0"
REF: A301

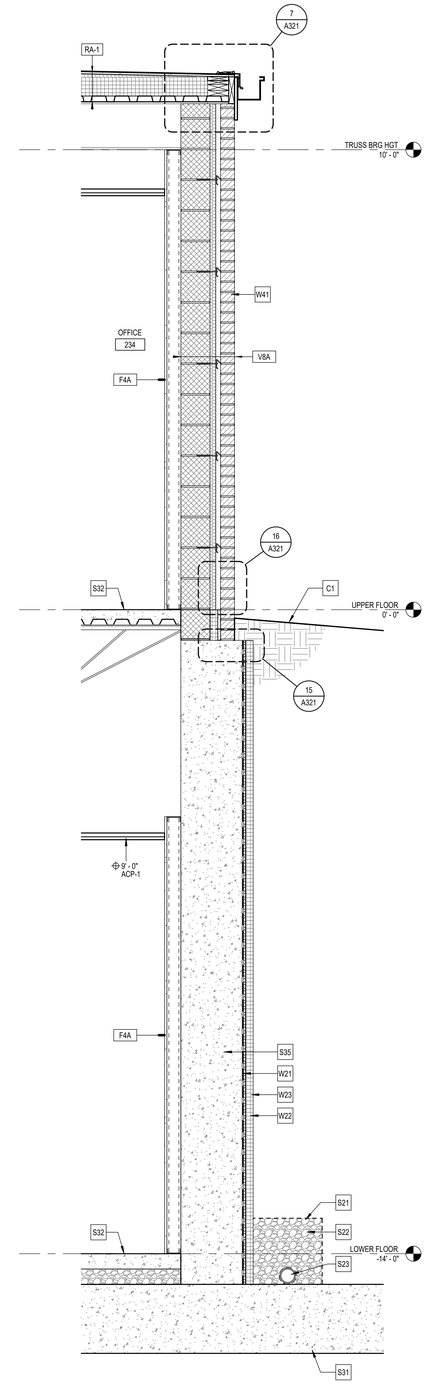

5 WALL SECTION

A311 SCALE: 3/4" = 1'-0"
REF: A301

WALL SECTION & DETAILS GENERAL NOTES

GN-1: FINISH GRADES, FOOTINGS, AND FOUNDATIONS ARE SHOWN FOR ILLUSTRATION ONLY - SEE CIVIL AND STRUCTURAL DRAWINGS.

GN-2: SEE STRUCTURAL DRAWINGS FOR MASONRY REINFORCING, GROUTING, AND BOND BEAMS

GN-3: PROVIDE COLD FORMED METAL FRAMING KICKERS AS REQUIRED.

GN-4: SEE ASSEMBLIES SHEET FOR INTERIOR WALL AND PARTITION TYPES, EXTERIOR WALLS, AND ROOF TYPES.

XX SHEET KEYNOTES

C1	FINISH GRADE - SEE CIVIL DRAWINGS
F2	WALL BASE AS SCHEDULED
F81	WINDOW SILL - TYP. AT ALL NEW WINDOW OPENINGS - SEE FINISH SCHEDULE
F82	ROLLER SHADE - SEE REFLECTED CEILING PLAN (TYP.)
F83	SCHEDULED CEILING - SEE REFLECTED CEILING PLAN
G1	PREFINISHED ALUMINUM STOREFRONT SYSTEM
G2	PRECAST WINDOW SILL (PC-1) - EXTEND SILL TO ADJACENT WINDOW WHERE PAIRS OCCUR
G10	DOOR AND FRAME - SEE SCHEDULE
S21	GEOTEXTILE FILTER FABRIC - SEE STRUCTURAL
S22	STONE FILL - SEE STRUCTURAL
S23	PERFORATED DRAIN PIPE - SEE STRUCTURAL
S31	CONCRETE FOOTING - SEE STRUCTURAL DRAWINGS
S32	CONCRETE SLAB - SEE STRUCTURAL DRAWINGS
S35	CONCRETE WALL - SEE STRUCTURAL DRAWINGS
SS2	STEEL BEAM - SEE STRUCTURAL DRAWINGS
SS3	STEEL JOIST - SEE STRUCTURAL DRAWINGS
W7	WRAP / EXTEND GWB INSIDE OPENING (TYP.)
W21	SHEET WATERPROOFING - EXTEND TO DRAIN AT FOOTING
W22	2" RIGID INSULATION
W23	DRAINAGE BOARD
W40	GROUT SOLID BEHIND MASONRY BELOW GRADE
W41	BRICK VENEER

0 1' 2' 4'
SCALE: 3/4" = 1' - 0"

SPECTRUM DESIGN
architects | engineers

Plaza Suite 1
10 Church Avenue, SE
Roanoke, VA 24011

540.342.6001
spectrumpc.com

BEDFORD COUNTY SHERIFF'S OFFICE EXPANSION

SPECTRUM DESIGN PROJECT NO.: **24112**

COMMONWEALTH OF VIRGINIA
TRAVIS ROOKSTOOL
Lic. No. 17288
05.04.2026
ARCHITECT

PROJ. MGR.: **JM**
CHECKED BY: **GEG**
DRAWN BY: **TLR, MIG**

SHEET ISSUE DATE:
05.04.2026

PROJECT PHASE:
BID DOCUMENTS

SHEET REVISIONS:

PLAN NORTH
SITE NORTH

SHEET NAME:
WALL SECTIONS

SHEET NUMBER:
A311

ORIGINAL SIZE: ARCH E1 (30X42) | 3/27/2026 3:00:08 AM
C:\Users\tbookstool\SPECTRUM\OneDrive - Spectrum Design PC\Documents\24112 Arch Sheeff\Bdc Central_tbookstool@spectrumpc.com.rvt

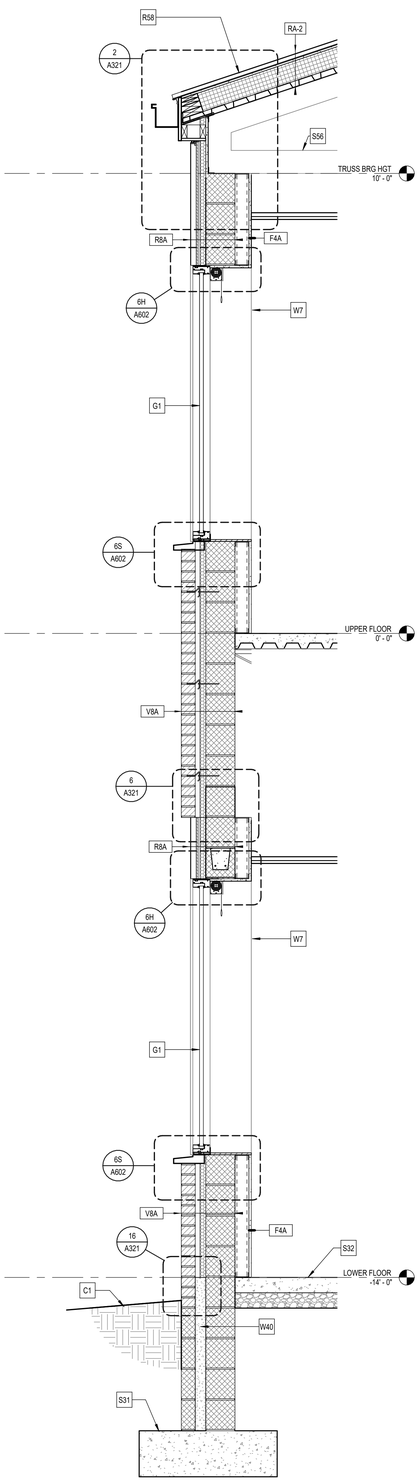

1 WALL SECTION

A312 SCALE: 3/4" = 1'-0"
REF: A301

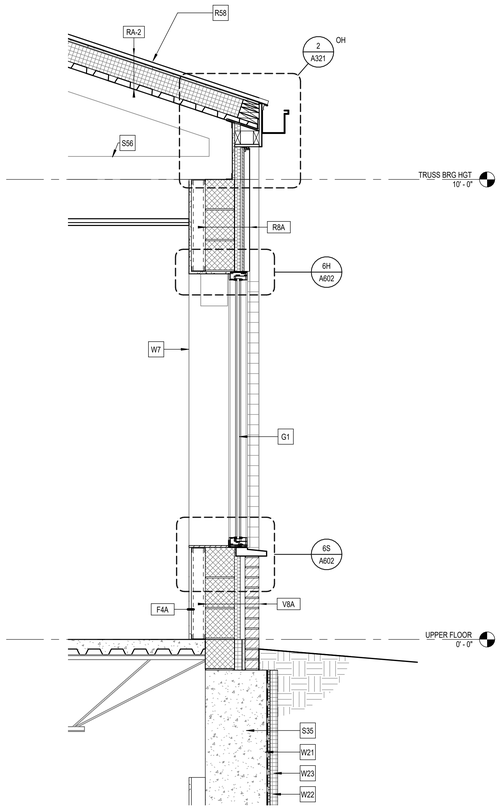

2 WALL SECTION

A312 SCALE: 3/4" = 1'-0"
REF: A301

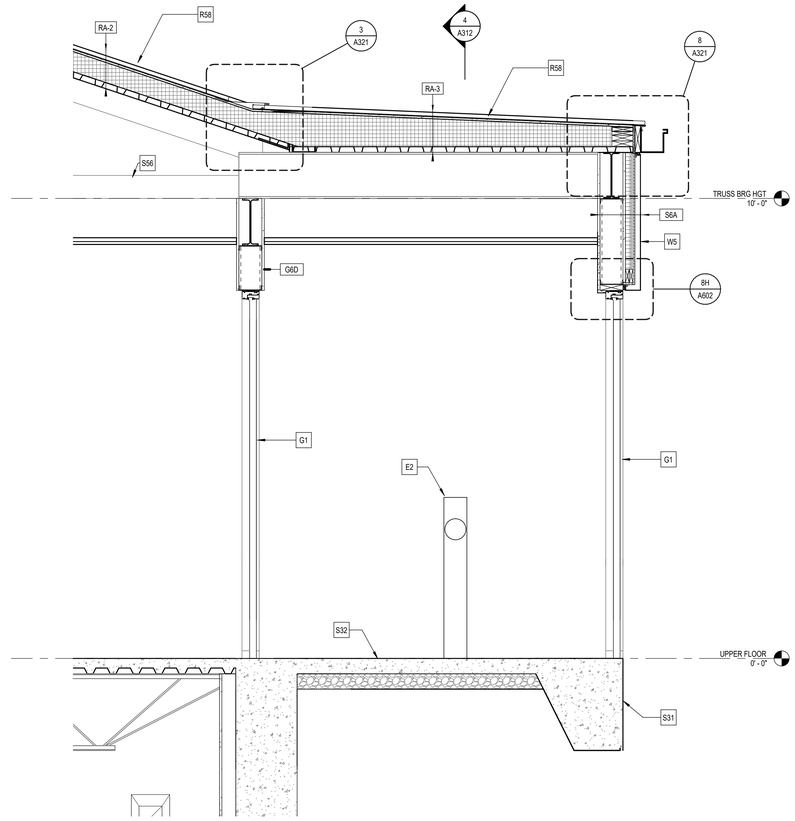

3 VESTIBULE SECTION

A312 SCALE: 3/4" = 1'-0"
REF: A301

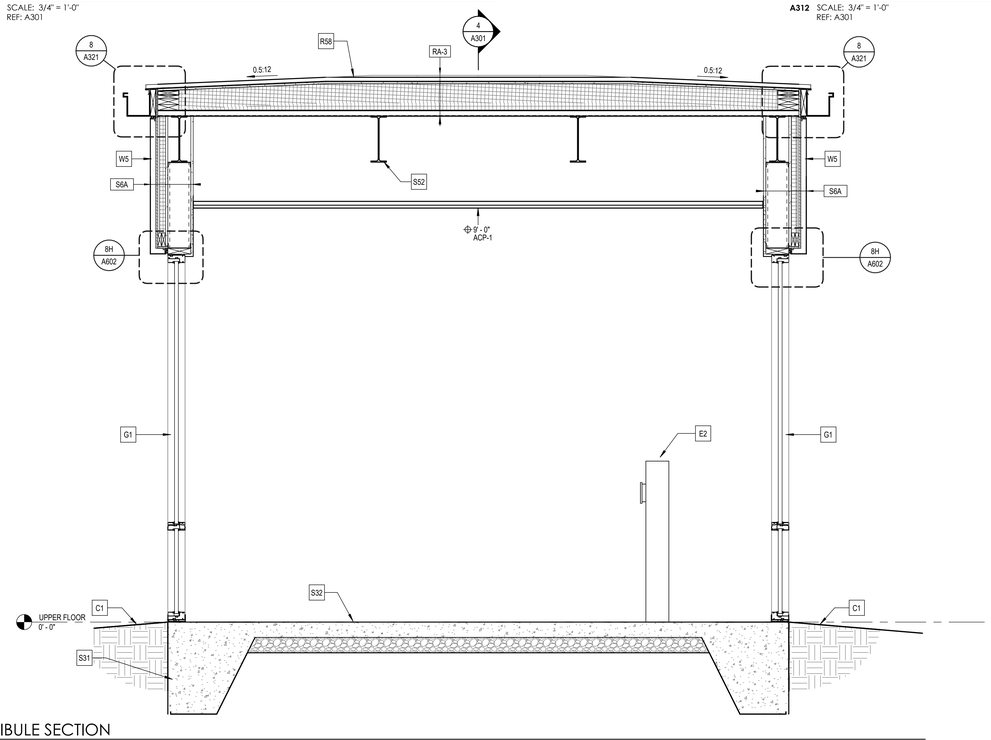

4 VESTIBULE SECTION

A312 SCALE: 3/4" = 1'-0"
REF: A101

WALL SECTION & DETAILS GENERAL NOTES

GN-1: FINISH GRADES, FOOTINGS, AND FOUNDATIONS ARE SHOWN FOR ILLUSTRATION ONLY - SEE CIVIL AND STRUCTURAL DRAWINGS.

GN-2: SEE STRUCTURAL DRAWINGS FOR MASONRY REINFORCING, GROUTING, AND BOND BEAMS

GN-3: PROVIDE COLD FORMED METAL FRAMING KICKERS AS REQUIRED.

GN-4: SEE ASSEMBLIES SHEET FOR INTERIOR WALL AND PARTITION TYPES, EXTERIOR WALLS, AND ROOF TYPES.

XX SHEET KEYNOTES

C1	FINISH GRADE - SEE CIVIL DRAWINGS
E2	AUTOMATIC DOOR OPERATOR; PROVIDE POWER-ASSISTED LOW-ENERGY OPERATOR AT DOOR. COORDINATE WITH DOOR HARDWARE, ACCESSIBILITY REQUIREMENTS, AND ELECTRICAL.
G1	PREFINISHED ALUMINUM STOREFRONT SYSTEM
R58	PREFINISHED CONCEALED FASTENER STANDING SEAM METAL ROOF
S31	CONCRETE FOOTING - SEE STRUCTURAL DRAWINGS
S32	CONCRETE SLAB - SEE STRUCTURAL DRAWINGS
S35	CONCRETE WALL - SEE STRUCTURAL DRAWINGS
S52	STEEL BEAM - SEE STRUCTURAL DRAWINGS
S56	STEEL ROOF TRUSS - SEE STRUCTURAL DRAWINGS
W5	METAL COMPOSITE MATERIAL (MCM) PANEL
W7	WRAP / EXTEND GWB INSIDE OPENING (TYP.)
W21	SHEET WATERPROOFING - EXTEND TO DRAIN AT FOOTING
W22	2" RIGID INSULATION
W23	DRAINAGE BOARD
W40	GROUT SOLID BEHIND MASONRY BELOW GRADE

SPECTRUM DESIGN
architects | engineers

Plaza Suite 1
10 Church Avenue, SE
Roanoke, VA 24011

540.342.6001
spectrumpc.com

BEDFORD COUNTY SHERIFF'S OFFICE EXPANSION

SPECTRUM DESIGN PROJECT NO.: **24112**

COMMONWEALTH OF VIRGINIA
TRAVIS ROOKSTOOL
Lic. No. 17288
05.04.2026
ARCHITECT

PROJ. MGR.: **JM**
CHECKED BY: **GEG**
DRAWN BY: **TLR, MIG**

SHEET ISSUE DATE:
05.04.2026

PROJECT PHASE:
BID DOCUMENTS

SHEET REVISIONS:

PLAN NORTH
SITE NORTH

SHEET NAME:
WALL SECTIONS

SHEET NUMBER:
A312

0 1' 2' 4'
SCALE: 3/4" = 1' - 0"

ORIGINAL SET: ARCH E1 (30X42) | 3/27/2024 3:00:11 AM
C:\Users\tnoblesoul\DESKTOP\ACHeDrive - Spectrum Design PC\Documents\24112 Arch Sheriff\Bc Central_Rookstool\spectrumpc.rvt

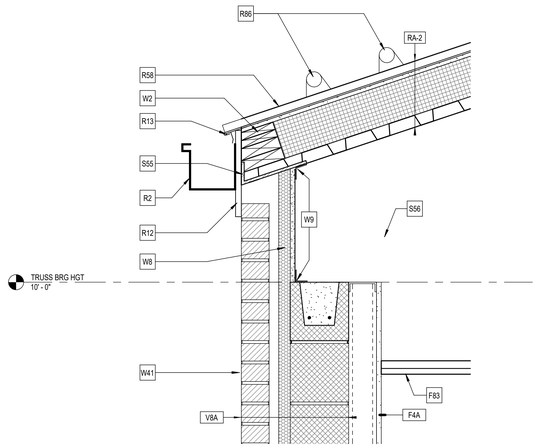

1 ROOF - WALL TRANSITION @ BRICK (TYP)
A321 SCALE: 1 1/2" = 1'-0"
REF: A121

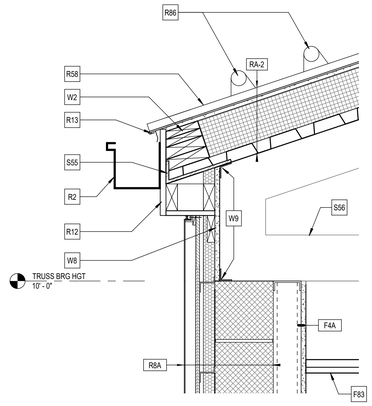

2 WALL DETAIL
A321 SCALE: 1 1/2" = 1'-0"
REF: A312

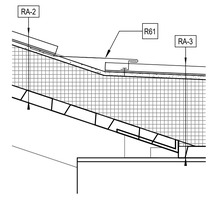

3 ROOF TRANSITION
A321 SCALE: 1 1/2" = 1'-0"
REF: A312

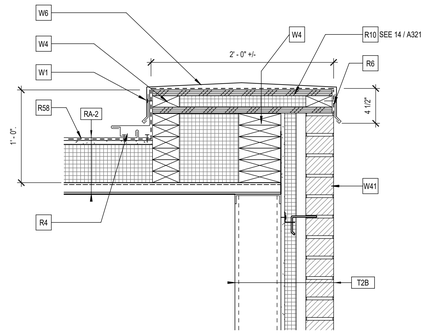

4 PARAPET DETAIL
A321 SCALE: 1 1/2" = 1'-0"
REF: A151

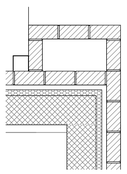

5 PILASTER DETAIL
A321 SCALE: 3/4" = 1'-0"
REF: A411

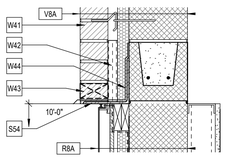

6 WALL DETAIL
A321 SCALE: 1 1/2" = 1'-0"
REF: A312

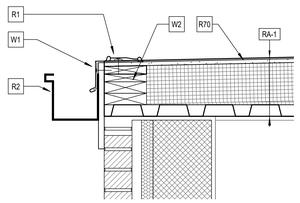

7 ROOF DETAIL
A321 SCALE: 1 1/2" = 1'-0"
REF: A311

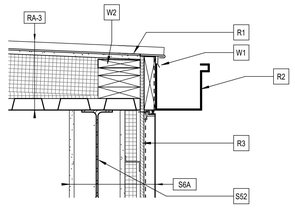

8 ROOF DETAIL
A321 SCALE: 1 1/2" = 1'-0"
REF: A312

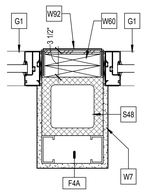

9 JAMB DETAIL
A321 SCALE: 1 1/2" = 1'-0"
REF: A311

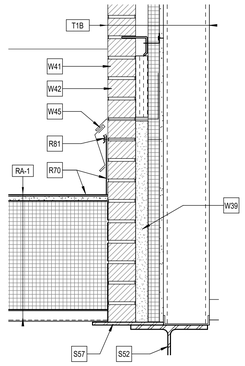

10 WALL DETAIL
A321 SCALE: 1 1/2" = 1'-0"
REF: A311

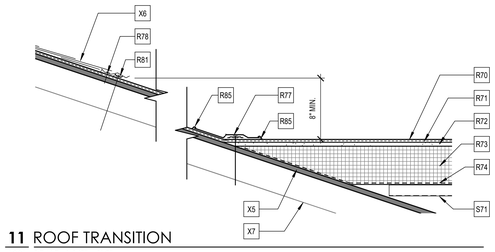

11 ROOF TRANSITION
A321 SCALE: 1 1/2" = 1'-0"
REF: A301

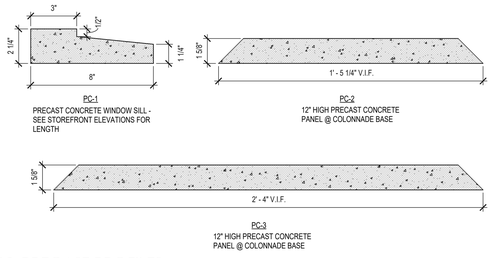

12 PRECAST PROFILES
A321 SCALE: 3" = 1'-0"

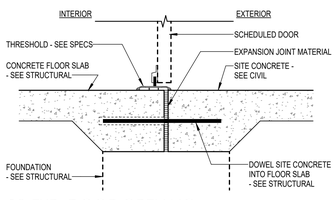

13 TYP. DOOR OPENING
A321 SCALE: 1 1/2" = 1'-0"
REF: A311

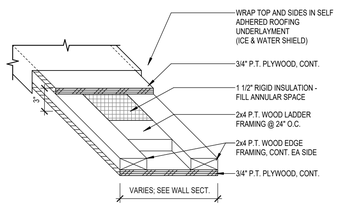

14 DETAIL - PARAPET CAP WOOD BLOCKING
A321 SCALE: 1 1/2" = 1'-0"

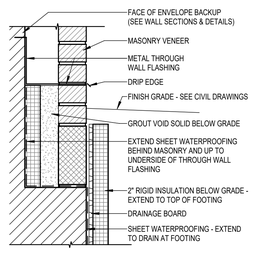

15 TYP. MASONRY WALL FLASHING
A321 SCALE: 1 1/2" = 1'-0"
REF: A311

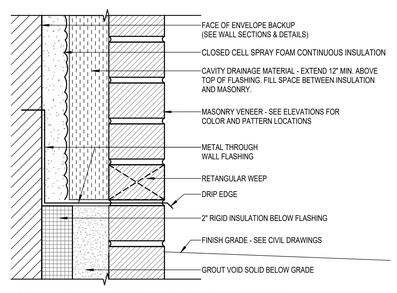

16 TYP. MASONRY WALL FLASHING
A321 SCALE: 3" = 1'-0"
REF: A311

0 0.5' 1' 2'
SCALE: 1 1/2" = 1' - 0"

WALL SECTION & DETAILS GENERAL NOTES

GN-1: FINISH GRADES, FOOTINGS, AND FOUNDATIONS ARE SHOWN FOR ILLUSTRATION ONLY - SEE CIVIL AND STRUCTURAL DRAWINGS.

GN-2: SEE STRUCTURAL DRAWINGS FOR MASONRY REINFORCING, GROUTING, AND BOND BEAMS

GN-3: PROVIDE COLD FORMED METAL FRAMING KICKERS AS REQUIRED.

GN-4: SEE ASSEMBLIES SHEET FOR INTERIOR WALL AND PARTITION TYPES, EXTERIOR WALLS, AND ROOF TYPES.

XX SHEET KEYNOTES

F83	SCHEDULED CEILING - SEE REFLECTED CEILING PLAN
G1	PREFINISHED ALUMINUM STOREFRONT SYSTEM
R1	REINF. PERIMETER PLATE, SET IN WATER CUT OFF MASTIC & MECH.
R2	6x6 PREFINISHED ALUMINUM GUTTER
R3	1/2" PT PLYWOOD SHEATHING
R4	FLASHING RIDGE
R6	ICE/WATER SHIELD
R10	PARAPET BLOCKING
R12	1X12 ALUMINUM WRAPPED FASCIA BOARD
R13	LOCKING EAVE TRIM W/ DRIPE EDGE
R58	PREFINISHED CONCEALED FASTENER STANDING SEAM METAL ROOF
R61	PREFINISHED METAL TRANSITION FLASHING - MATCH ROOF COLOR
R70	FLEXIBLE SHEET MEMBRANE ROOFING (FSM)
R71	BONDING ADHESIVE
R72	(1) LAYER 1/2" INSULATED COVERBOARD (R-2.5 MIN)
R73	POLYISO BOARD INSULATION - STAGGERED JOINTS
R74	VAPOR / AIR BARRIER MEMBRANE
R77	REINFORCED PERIMETER STRIP
R78	METAL COUNTERFLASHING W/ SEALANT
R81	TERMINATION BAR
R85	HEAT WELD AND SEALANT
R86	TWO ROWS SNOW RAILS - FULL LENGTH OF ROOF
S48	8" CMU
S52	STEEL BEAM - SEE STRUCTURAL DRAWINGS
S54	STEEL ANGLE - SEE STRUCTURAL DRAWINGS
S55	STEEL BENT PLATE - SEE STRUCTURAL DRAWINGS
S56	STEEL ROOF TRUSS - SEE STRUCTURAL DRAWINGS
S57	STEEL PLATE - SEE STRUCTURAL DRAWINGS
S71	METAL ROOF DECK
W1	PREFINISHED DRIP EDGE FLASHING W/ CLEAT
W2	2x6 CONTINUOUS PT WOOD BLOCKING
W4	2x4 CONTINUOUS PT WOOD BLOCKING
W6	PREFINISHED METAL COPING
W7	WRAP / EXTEND GWB INSIDE OPENING (TYP.)
W8	1/2" GLASS-FACED EXTERIOR SHEATHING
W9	CONTINUOUS LIGHT GAUGE ANGLE - 1 1/2" X 1 1/2"
W39	GROUT SOLID BEHIND MASONRY BELOW FLASHING
W41	BRICK VENEER
W42	MORTAR NET
W43	MASONRY WEEP
W44	THROUGH WALL FLASHING
W45	PREFINISHED THROUGH WALL COUNTER FLASHING W/ RECEIVER
W60	2x CONTINUOUS PT WOOD BLOCKING
W92	PREFINISHED BRAKE METAL - MATCH STOREFRONT COLOR AND WRAP INSIDE OPENING
X5	EXISTING ROOF SHEATHING
X6	EXISTING SHINGLES
X7	EXISTING ROOF STRUCTURE

SPECTRUM DESIGN
architects | engineers

Plaza Suite 1
10 Church Avenue, SE
Roanoke, VA 24011

540.342.6001
spectrumpc.com

BEDFORD COUNTY SHERIFF'S OFFICE EXPANSION

SPECTRUM DESIGN PROJECT NO.: **24112**

COMMONWEALTH OF VIRGINIA
TRAVIS ROOKSTOOL
Lic. No. 17288
05.04.2026
ARCHITECT

PROJ. MGR.:	CHECKED BY:	DRAWN BY:
JM	GEG	TLR, MIG

SHEET ISSUE DATE:
05.04.2026

PROJECT PHASE:
BID DOCUMENTS

SHEET REVISIONS:

PLAN NORTH SITE NORTH

SHEET NAME:
WALL DETAILS

SHEET NUMBER:
A321

ORIGINAL SIZE - ARCH E1 (30X42) | 5/5/2026 3:09:15 AM
C:\Users\tooleboxSPECTRUM\OneDrive - Spectrum Design PC\Documents\24112 Arch Sheet Bdy Contrbd_tooleboxSpectrumpc.com.rvt

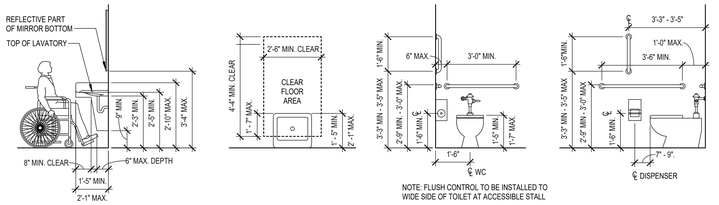

NOTE: FLUSH CONTROL TO BE INSTALLED TO WIDE SIDE OF TOILET AT ACCESSIBLE STALL

GUIDELINES FOR ACCESSIBLE PLUMBING FIXTURES, AND TOILET AND BATH ACCESSORIES

SCALE: 3/8" = 1'-0"

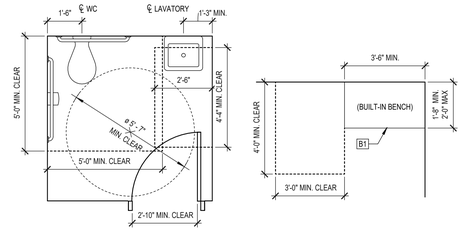

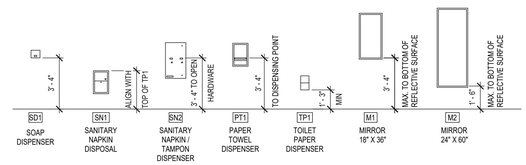

TYPICAL TOILET AND BATH ACCESSORY ACCESSIBLE MOUNTING HEIGHTS

SCALE: 1/4" = 1'-0"

FLOOR PLAN GENERAL NOTES

GN-1: DIMENSION GUIDELINES:
- NEW CONSTRUCTION = PLAN DIMENSIONS ARE TO FACE OF FRAMING MEMBERS AT GWB, FACE OF MASONRY, AND CENTERLINE OF STRUCTURAL GRID U.N.O.
- EXISTING CONSTRUCTION = PLAN DIMENSIONS ARE TO FACE OF FINISH OF EXISTING WALLS TO REMAIN U.N.O.
- PLUMBING FIXTURES = PLAN DIMENSIONS ARE FROM FACE OF FINISH (GWB, TILE, ETC) TO CENTERLINE OF FIXTURE.
- "CLEAR" = DIMENSIONS ARE TO FACE OF FINISH (GWB, TILE, ETC).

GN-2: WHERE PARTITIONS OF DIFFERENT THICKNESSES ABUT OR ADJOIN IN THE SAME LOCATION, THE EXPOSED / FINISH FACES SHALL BE INSTALLED FLUSH / ALIGNED.

GN-3: SEE LIFE SAFETY PLANS FOR FIRE EXTINGUISHER CABINET TYPES AND LOCATIONS.

GN-4: SEE FINISH PLANS FOR TILE LOCATIONS.

XX SHEET KEYNOTES

A2 URINAL SCREEN PARTITION- 24" X 42"

A3 FLOOR MOUNTED TOILET PARTITION. SEE SPECIFICATIONS FOR ADDITIONAL INFORMATION

A7 ELEVATOR

S51 STEEL COLUMN - SEE STRUCTURAL DRAWINGS

S80 STEEL ACCESS LADDER

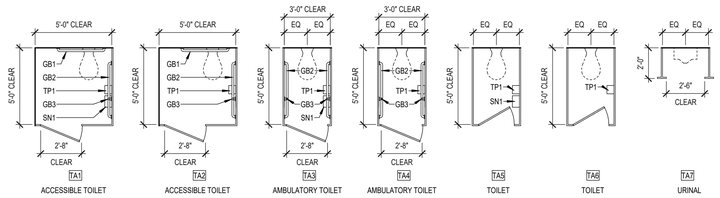

TYPICAL TOILET AND BATH ACCESSORY GROUPS (TA-)

SCALE: 1/4" = 1'-0"

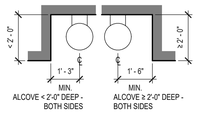

ACCESSIBLE DRINKING FOUNTAIN

SCALE: 3/8" = 1'-0"

TOILET AND BATH ACCESSORIES

MARK	MOUNTING	DESCRIPTION	MANUFACTURER	MODEL
BC1	TBD	BABY CHANGING STATION	TBD	TBD
GB1	SEE SHEET A401	36" GRAB BAR	BOBRICK	B-5806.99 x 36"
GB2	SEE SHEET A401	42" GRAB BAR	BOBRICK	B-5806.99 x 42"
GB3	SEE SHEET A401	18" VERTICAL GRAB BAR	BOBRICK	B-5806.99 x 18"
MR1	SEE SHEET A401	18" x 36" MIRROR		
MR2	SEE SHEET A401	24" x 60" MIRROR		
PT2	SEE SHEET A401	PAPER TOWEL DISPENSER - ROLL		
SD1	SEE SHEET A401	SOAP DISPENSER	BRADLEY	6A00-11
SN1	25" TO TOP	SANITARY NAPKIN DISPOSAL	BOBRICK	B-270
TP	28" TO TOP	TOILET TISSUE DISPENSER	BOBRICK	B-4288

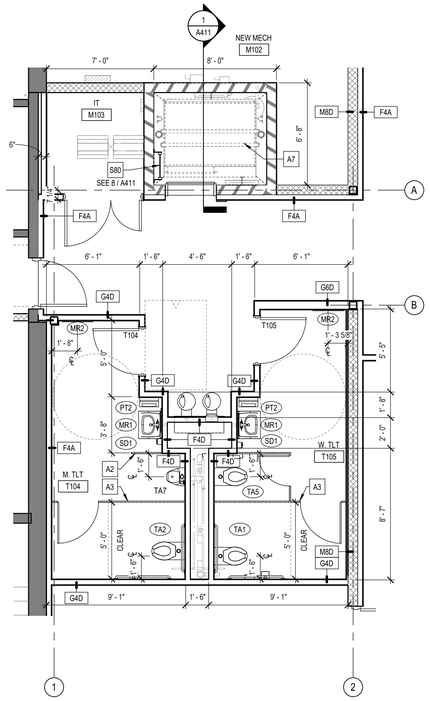

1 LOWER FLOOR ENLRG TOILET ROOM

A401 SCALE: 1/4" = 1'-0"
REF: A102

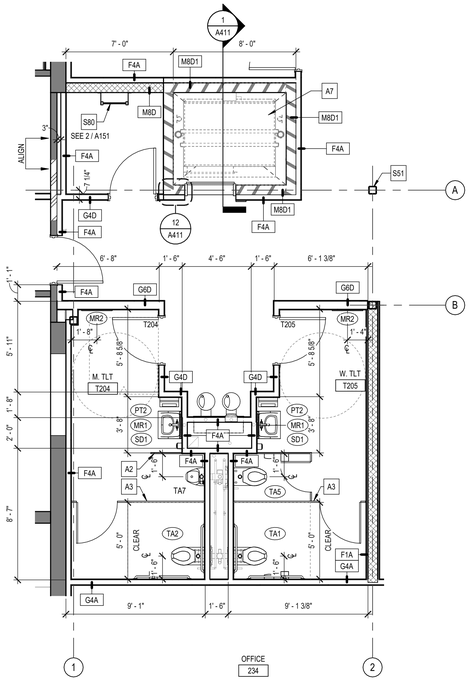

2 MAIN FLOOR ENLRG TOILET ROOM

A401 SCALE: 1/4" = 1'-0"
REF: A101

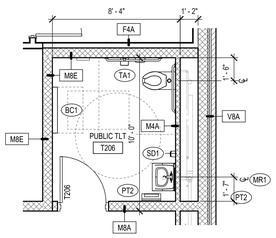

3 MAIN FLOOR ENLRG TOILET ROOM

A401 SCALE: 1/4" = 1'-0"
REF: A101

MINIMUM DOOR CLEARANCE LEGEND

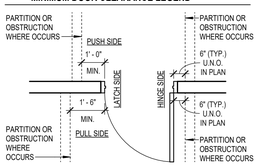

ANSI 117.1 2017
WHERE LATCH SIDE OF DOORWAYS ARE LOCATED ADJACENT TO A PERPENDICULAR PARTITION AND NOT OTHERWISE DIMENSIONED:

- PUSH SIDE - PROVIDE 1'-0" MIN. CLEAR BETWEEN INSIDE EDGE OF FRAME OPENING AND FINISH FACE OF ADJACENT PARTITION.
- PULL SIDE - PROVIDE 1'-6" MIN. CLEAR BETWEEN INSIDE EDGE OF FRAME OPENING AND FINISH FACE OF ADJACENT PARTITION.

0 2' 4' 8'
SCALE: 1/4" = 1' - 0"

SPECTRUM DESIGN
architects | engineers

Plaza Suite 1
10 Church Avenue, SE
Roanoke, VA 24011

540.342.6001
spectrumpc.com

BEDFORD COUNTY SHERIFF'S OFFICE EXPANSION

SPECTRUM DESIGN PROJECT NO.: 24112

COMMONWEALTH OF VIRGINIA
TRAVIS ROOKSTOOL
Lic. No. 17288
05.04.2026
ARCHITECT

PROJ. MGR.:	CHECKED BY:	DRAWN BY:
JM	GEG	TLR, MIG

SHEET ISSUE DATE:
05.04.2026

PROJECT PHASE:
BID DOCUMENTS

SHEET REVISIONS:

PLAN NORTH SITE NORTH

SHEET NAME:
ENLARGED TOILET ROOM PLANS & ELEVATIONS

SHEET NUMBER:
A401

ORIGINAL SIZE: ARCH E1 (30X42) | 3/3/2026 3:00:19 AM
C:\Users\rookstool\SPECTRUM\OneDrive - Spectrum Design PC\Documents\24112 Arch Sheet\R24_Central_Rookstool\spectrumpc.rvt

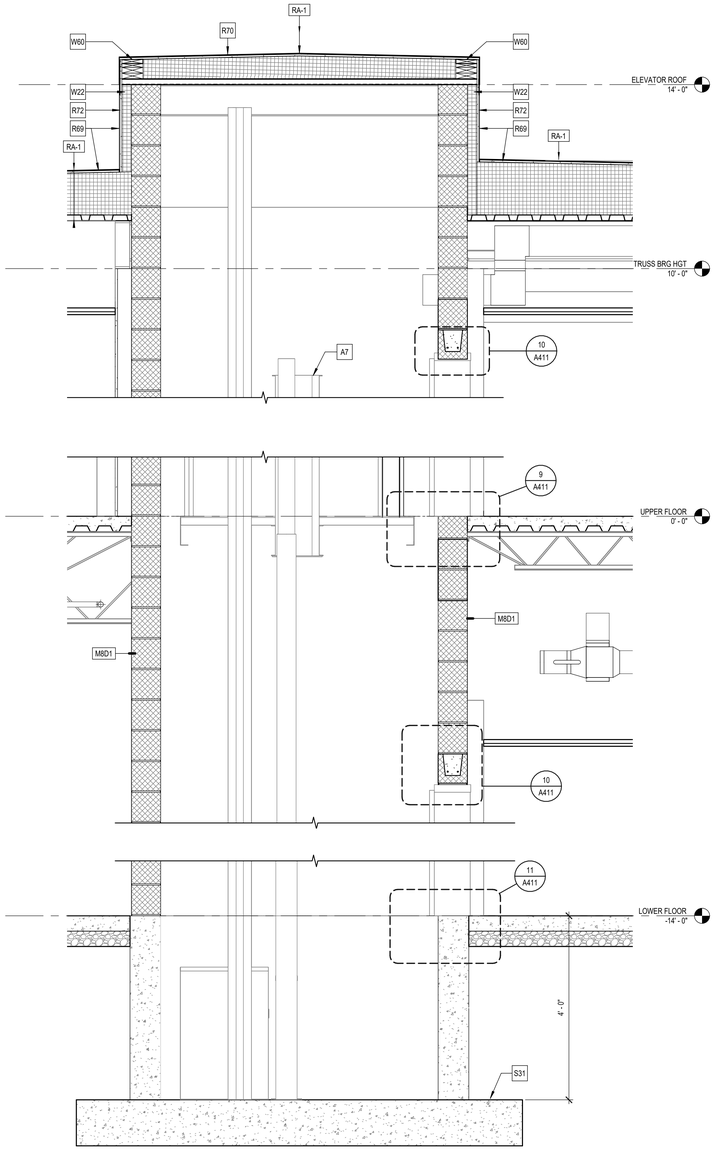

1 ELEVATOR SECTION

A411 SCALE: 3/4" = 1'-0"
REF: A151

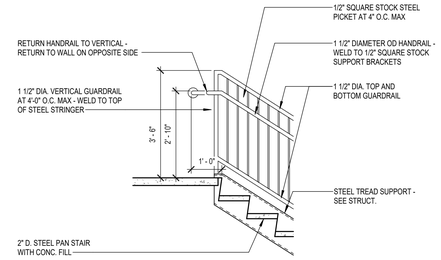

2 STAIR LANDING DETAIL

A411 SCALE: 1/2" = 1'-0"
REF: A411

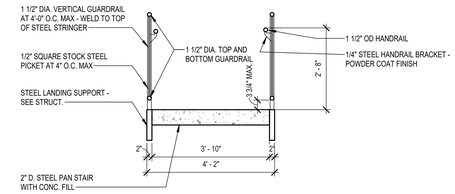

3 STAIR SECTION

A411 SCALE: 1/2" = 1'-0"
REF: A411

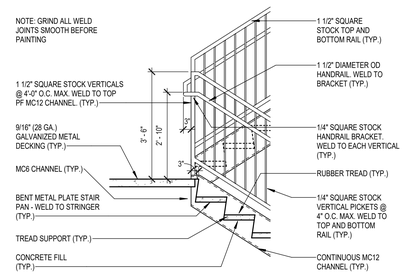

4 STAIR TURN DETAIL

A411 SCALE: 1/2" = 1'-0"
REF: A411

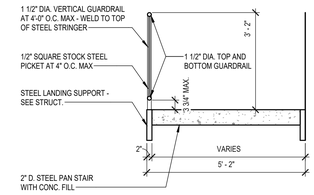

5 LANDING DETAIL

A411 SCALE: 1/2" = 1'-0"
REF: A411

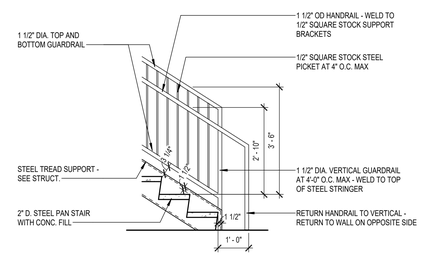

6 STAIR LANDING DETAIL

A411 SCALE: 1/2" = 1'-0"
REF: A411

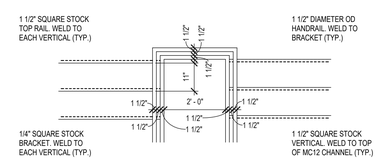

7 STAIR TURN DETAILS

A411 SCALE: 1/2" = 1'-0"
REF: A411

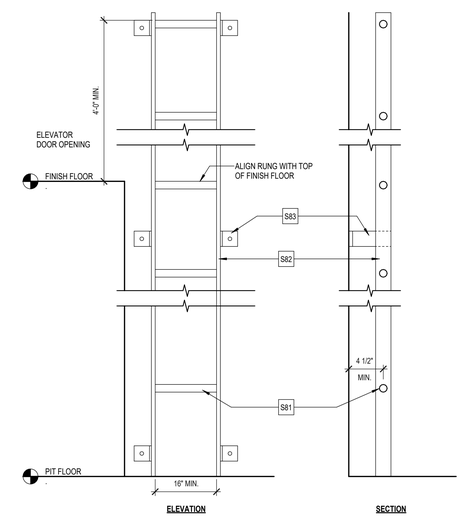

8 ELEVATOR PIT LADDER

A411 SCALE: 1 1/2" = 1'-0"

VERTICAL CIRCULATION GENERAL NOTES

GN-1: FINISH GRADES, FOOTINGS, AND FOUNDATIONS ARE SHOWN FOR ILLUSTRATION ONLY - SEE CIVIL AND STRUCTURAL DRAWINGS.

GN-2: SEE STRUCTURAL DRAWINGS FOR MASONRY REINFORCING, GROUTING, AND BOND BEAMS

GN-3: PROVIDE COLD FORMED METAL FRAMING KICKERS AS REQUIRED.

GN-4: SEE ASSEMBLIES SHEET FOR INTERIOR WALL AND PARTITION TYPES, EXTERIOR WALLS, AND ROOF TYPES.

XX SHEET KEYNOTES

A7	ELEVATOR
F18	ELEVATOR SILL BY ELEVATOR MFG. ALIGN WITH FLOOR FINISH
M1	WALL UNIT. SEE MECH.
R69	FLEXIBLE SHEET MEMBRANE ROOFING (FSM. EXTEND UP AND OVER ELEVATOR ROOF EXTENSION - ALL SIDES
R70	FLEXIBLE SHEET MEMBRANE ROOFING (FSM)
R72	(1) LAYER 1/2" INSULATED COVERBOARD (R-2.5 MIN)
S9	POUR STOP
S10	GROUT FRAME SOLID
S31	CONCRETE FOOTING - SEE STRUCTURAL DRAWINGS
S36	BOND BEAM - SEE STRUCT.
S48	8" CMU
S59	CONT. 4"X4"X3/8" ANGLE BOLTED TO CONC.
S81	STEEL NON SLIP RUNGS @ 1'-0" O.C.
S82	2" WIDE x 1/2" THICK STEEL BAR STOCK VERTICAL SIDE MEMBERS
S83	STEEL WALL BRACKET
W12	ELEVATOR DOOR FRAME BY ELEVATOR MFG. GROUT FRAME SOLID
W22	2" RIGID INSULATION
W60	2x CONTINUOUS PT WOOD BLOCKING

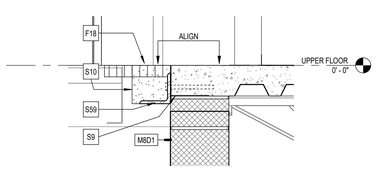

9 ELEVATOR DOOR SILL DETAIL - MAIN FLOOR

A411 SCALE: 1 1/2" = 1'-0"
REF: A411

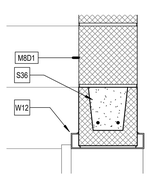

10 ELEVATOR DOOR HEAD DETAIL

A411 SCALE: 1 1/2" = 1'-0"
REF: A411

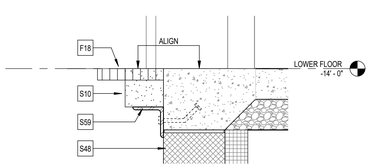

11 ELEVATOR SILL DETAIL GROUND FLOOR

A411 SCALE: 1 1/2" = 1'-0"
REF: A411

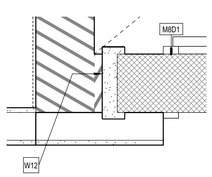

12 ELEVATOR DOOR JAMB DETAIL

A411 SCALE: 1 1/2" = 1'-0"
REF: A401

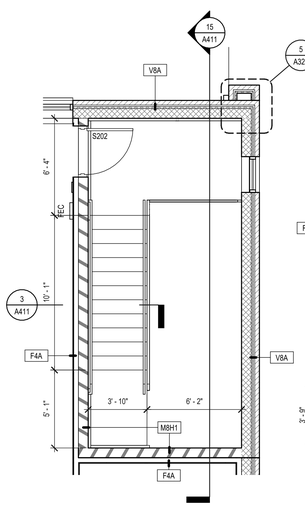

13 FIRST FLOOR STAIR

A411 SCALE: 1/4" = 1'-0"
REF: A101

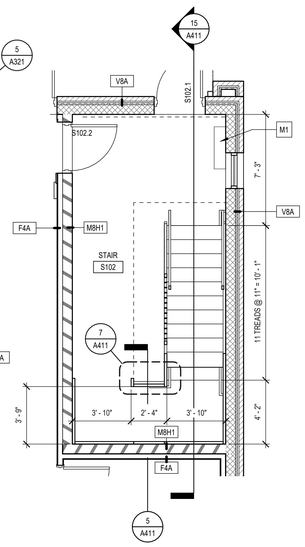

14 SECOND FLOOR STAIR

A411 SCALE: 1/4" = 1'-0"
REF: A102

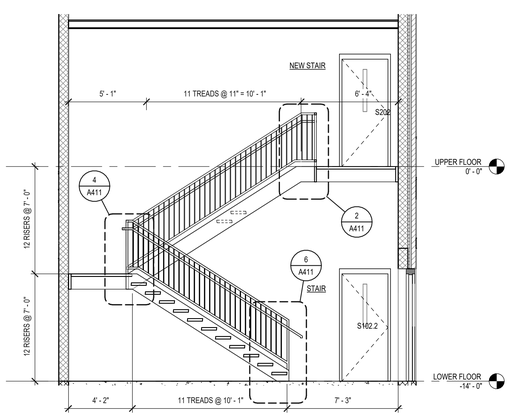

15 STAIR SECTION

A411 SCALE: 1/4" = 1'-0"
REF: A411

GRAPHICS DISCLAIMER

3D / ISOMETRIC VIEWS AND GRAPHICS ON THIS SHEET ARE FOR ILLUSTRATIVE PURPOSES ONLY. GC TO REFERENCE DETAILED AND DIMENSIONED DRAWINGS FOR THE CONTRACT REQUIREMENTS.

0 2' 4' 8'
SCALE: 1/4" = 1' - 0"

SPECTRUM DESIGN
architects | engineers

Plaza Suite 1
10 Church Avenue, SE
Roanoke, VA 24011

540.342.6001
spectrumpc.com

BEDFORD COUNTY SHERIFF'S OFFICE EXPANSION

SPECTRUM DESIGN PROJECT NO.: **24112**

COMMONWEALTH OF VIRGINIA
TRAVIS ROOKSTOOL
Lic. No. 17288
05.04.2026
ARCHITECT

PROJ. MGR.:	CHECKED BY:	DRAWN BY:
JM	GEG	TLR, MIG

SHEET ISSUE DATE:
05.04.2026

PROJECT PHASE:
BID DOCUMENTS

SHEET REVISIONS:

PLAN NORTH SITE NORTH

SHEET NAME:
VERTICAL CIRCULATION PLANS, SECTIONS, & DETAILS

SHEET NUMBER:
A411

ORIGINAL SIZE - ARCH E1 (30X42) | 5/12/2026 3:00:24 AM
C:\Users\tookstool\SPECTRUM\OneDrive - Spectrum Design PC\Documents\2412 Arch Sheet\F06-Central_tookstool.rvt

ROOM FINISH SCHEDULE

ROOM NO.	ROOM NAME	FLOOR	BASE	WALLS MATL	WALLS FINISH	CEILING MATL	CEILING FINISH	REMARKS
UPPER FLOOR								
201	CONF	EXIST.	EXIST.	EXIST.	EXIST.	EXIST.	EXIST.	NO WORK THIS AREA
202	EXIST. RECEPTION	EXIST.	EXIST.	EXIST.	PNT*	EXIST.	EXIST.	*PAINT WALL WITH NEW WORK. PAINT FULL LENGTH OF WALL, MATCH ADJ. COLOR & SHEEN
203	EXIST. OFFICE	EXIST.	EXIST.	EXIST.	EXIST.	EXIST.	EXIST.	NO WORK THIS AREA
203A	EXIST. TLT	EXIST.	EXIST.	EXIST.	EXIST.	EXIST.	EXIST.	NO WORK THIS AREA
204	EXIST. OFFICE	EXIST.	EXIST.	EXIST.	EXIST.	EXIST.	EXIST.	NO WORK THIS AREA
205	NEW OFFICE	LVT-1	WB-1	EXIST. GWB / GWB	PNT	ACP	--	
206	EXIST. OFFICE	EXIST.	EXIST.	EXIST.	EXIST.	EXIST.	EXIST.	NO WORK THIS AREA
207	EXIST. STORAGE	EXIST.	EXIST.	EXIST.	EXIST.	EXIST.	EXIST.	NO WORK THIS AREA
208	EXIST. OFFICE	EXIST.	EXIST.	EXIST.	EXIST.	EXIST.	EXIST.	NO WORK THIS AREA
210	NEW OFFICE	LVT-1	WB-1	EXIST. GWB / GWB	PNT	ACP	--	
212	NEW OFFICE	LVT-1	WB-1	EXIST. GWB / GWB	PNT	ACP	--	
213	NEW OFFICE	LVT-1	WB-1	EXIST. GWB / GWB	PNT	ACP	--	
214	NEW OFFICE	LVT-1	WB-1	EXIST. GWB / GWB	PNT	ACP	--	
215	NEW OFFICE	LVT-1	WB-1	EXIST. GWB / GWB	PNT	ACP	--	
216	NEW OFFICE	LVT-1	WB-1	EXIST. GWB / GWB	PNT	ACP	--	
217	NEW OFFICE	LVT-1	WB-1	EXIST. GWB / GWB	PNT	ACP	--	
218	EXIST. OFFICE	LVT-1	WB-1	EXIST. GWB	PNT	ACP	--	
218A	NEW TLT	RES-1	RES-1	EXIST. GWB / GWB	PT / PNT*	EXIST.	EXIST.	*SEE TILE ELEVATIONS
219	EXIST. OFFICE	EXIST.	EXIST.	EXIST.	EXIST.	EXIST.	EXIST.	NO WORK THIS AREA
220	NEW STORAGE	VCT-1	WB-1	EXIST. GWB / GWB	PNT	ACP	--	
221A	EXIST. OFFICE	EXIST.	EXIST.	EXIST.	EXIST.	EXIST.	EXIST.	NO WORK THIS AREA
221B	EXIST. OFFICE	EXIST.	EXIST.	EXIST.	EXIST.	EXIST.	EXIST.	NO WORK THIS AREA
222	EXIST. OFFICE	EXIST.	EXIST.	EXIST.	PNT*	EXIST.	EXIST.	*PAINT WALL WITH NEW WORK. PAINT FULL LENGTH OF WALL, MATCH ADJ. COLOR & SHEEN
223	NEW OFFICE	LVT-1	WB-1	EXIST. GWB / GWB	PNT	ACP	--	
224	NEW RECORDS	EXIST.	EXIST.	EXIST.	EXIST.	EXIST.	EXIST.	NO WORK THIS AREA
225	EXIST. OFFICE	EXIST.	EXIST.	EXIST.	EXIST.	EXIST.	EXIST.	NO WORK THIS AREA
226	EXIST. COPY	EXIST.	EXIST.	EXIST.	EXIST.	EXIST.	EXIST.	NO WORK THIS AREA
230	OPEN OFFICE	VARIES*	WB-2	CMU / GWB	PNT / CT-1**	ACP	--	*SEE FINISH PLANS FOR FLOOR PATTERN **CT-1 BEHIND WATER COOLER ONLY
231	CONFERENCE ROOM	VARIES*	WB-2	GWB	PNT	ACP	--	*SEE FINISH PLANS FOR FLOOR PATTERN
233	STORAGE	LVT-2	WB-2	GWB	PNT	ACP	--	
234	OFFICE	LVT-2	WB-2	EXIST. CMU / GWB	PNT	ACP	--	
235	OFFICE	LVT-2	WB-2	GWB	PNT	ACP	--	
236	OFFICE	LVT-2	WB-2	GWB	PNT	ACP	--	
237	OFFICE	LVT-2	WB-2	GWB	PNT	ACP	--	
238	OFFICE	LVT-2	WB-2	GWB	PNT	ACP	--	
240	OPEN OFFICE	VARIES*	WB-2	GWB	PNT	ACP		*SEE FINISH PLANS FOR FLOOR PATTERN
241	OFFICE	LVT-2	WB-2	GWB	PNT	ACP	--	
242	RECEPTION	LVT-2	WB-2	CMU / GWB	PNT	ACP	--	
243	OFFICE	LVT-2	WB-2	GWB	PNT	ACP	--	
244	CONFERENCE ROOM	LVT-2	WB-2	CMU / GWB	PNT	ACP	--	
245	INTERVIEW	LVT-2	WB-2	CMU	PNT	ACP	--	
246	INTERVIEW	LVT-2	WB-1	CMU	PNT	ACP	--	
247	OBSERVATION	LVT-2	WB-2	CMU	PNT	ACP	--	
248	FINGERPRINT	LVT-4	WB-2	CMU	PNT	ACP	--	
C201	EXISTING CORRIDOR	EXIST.	EXIST.	EXIST. GWB / GWB	PNT	EXIST.	--	
C202	CORRIDOR	LVT-2	WB-2	GWB	PNT	ACP	--	
C202	NEW CORRIDOR	VCT-1	WB-1	EXIST. GWB / GWB	PNT	ACP		
C203	NEW CORRIDOR	VCT-1	WB-1	GWB	PNT	ACP		
C204	NEW CORRIDOR	VCT-1	WB-1	EXIST. GWB / GWB	PNT	ACP		
C205	NEW CORRIDOR	VCT-1	WB-1	EXIST. GWB / GWB	PNT	ACP	--	
C205	CORRIDOR	LVT-2	WB-2	CMU	PNT	ACP	--	
C206	PUBLIC LOBBY / WAITING	VARIES*	WB-2	CMU	PNT / CT-1**	ACP	--	*SEE FINISH PLANS FOR FLOOR PATTERN **CT-1 BEHIND WATER COOLER ONLY
J201	EXIST. JAN	EXIST.	EXIST.	EXIST.	EXIST.	EXIST.	EXIST.	NO WORK THIS AREA
S137	ELEV	--	--	CMU	--	--	--	
S201	EXIST. STAIR	EXIST.	EXIST.	EXIST.	EXIST.	EXIST.	EXIST.	NO WORK THIS AREA
S202	NEW STAIR	LVT-2*	WB-2	CMU	PNT	--	--	*RB-1 ON STAIR TREADS, RISERS, & LANDING
T201	EXIST. TLT	EXIST.	EXIST.	EXIST.	EXIST.	EXIST.	EXIST.	NO WORK THIS AREA
T202	EXIST. TLT	EXIST.	EXIST.	EXIST.	EXIST.	EXIST.	EXIST.	NO WORK THIS AREA
T203	EXIST. TLT	EXIST.	EXIST.	EXIST.	EXIST.	EXIST.	EXIST.	NO WORK THIS AREA
T204	M. TLT	RES-1	RES-1	GWB	PT / PNT*	GYP.	PNT	*SEE TILE ELEVATIONS
T205	W. TLT	RES-1	RES-1	GWB	PT / PNT*	GYP.	PNT	*SEE TILE ELEVATIONS
T206	PUBLIC TLT	RES-1	RES-1	CMU	PNT	ACP	--	
V201	EXIST. VEST.	EXIST.	EXIST.	EXIST.	EXIST.	EXIST.	EXIST.	NO WORK THIS AREA
V201.1	EXIST. LOBBY	EXIST.	EXIST.	EXIST.	PNT*	EXIST.	EXIST.	*PAINT WALL WITH NEW WORK. PAINT FULL LENGTH OF WALL, MATCH ADJ. COLOR & SHEEN
V202	SECURE VEST.	CPT-1	WB-2	GWB	PNT	ACP	--	

ROOM FINISH SCHEDULE

ROOM NO.	ROOM NAME	FLOOR	BASE	WALLS MATL	WALLS FINISH	CEILING MATL	CEILING FINISH	REMARKS
LOWER FLOOR								
101	EXIST. STORAGE	EXIST.	EXIST. / WB-1	EXIST. CMU	EXIST. / PNT	ACP	--	
102	EXIST. OFFICE	LVT-1	WB-1	EXIST. CMU / CMU	PNT	ACP	--	
103	NEW JANITOR	EXIST.	EXIST.	EXIST.	EXIST.	EXIST.	EXIST.	NO WORK THIS AREA
104	EXIST. STORAGE	EXIST.	EXIST.	EXIST.	EXIST.	EXIST.	EXIST.	NO WORK THIS AREA
105	EXIST. STORAGE	EXIST.	EXIST.	EXIST.	EXIST.	EXIST.	EXIST.	NO WORK THIS AREA
106	EXIST. STORAGE	EXIST.	EXIST.	EXIST.	EXIST.	EXIST.	EXIST.	NO WORK THIS AREA
107	NEW STORAGE	LVT-1	WB-1	EXIST. CMU / CMU	PNT	EXIST.	EXIST.	
108	LACTATION	LVT-1	WB-1	EXIST. CMU / GWB	PNT	ACP	--	
109	EXIST. ECC COMM STATIONS	EXIST.	EXIST. / WB-1	EXIST. CMU / GWB	EXIST. / PNT	ACP	--	
110A	OPEN OFFICE	LVT-1	WB-1	EXIST. GWB / GWB	PNT	ACP		
110B	OPEN OFFICE	LVT-1	WB-1	EXIST. CMU / GWB	PNT	ACP	--	
110C	OFFICE	LVT-1	WB-1	EXIST. CMU / GWB	PNT	ACP	--	
111	ECC BREAK ROOM	LVT-1	WB-1	EXIST. GWB / GWB	PNT	ACP	--	
112	EXIST. ELEC / ECC SERVER	EXIST.	EXIST.	EXIST.	EXIST.	EXIST.	EXIST.	NO WORK THIS AREA
113	EXIST. OFFICE	EXIST.	EXIST.	EXIST.	EXIST.	EXIST.	EXIST.	NO WORK THIS AREA
114	EXIST. SERVER (COUNTY)	EXIST.	EXIST.	EXIST.	EXIST.	EXIST.	EXIST.	NO WORK THIS AREA
120	BREAK ROOM / KITCHEN	LVT-2 & LVT-3	WB-2	GWB	PNT	ACP	--	
121A	MULTIPURPOSE / EOC	LVT-2, LVT-3 & LVT-4	WB-2	GWB	PNT	ACP	--	
121B	STORAGE	LVT-2	WB-2	CMU / GWB	PNT	ACP	--	
122	OPEN OFFICE	VARIES	WB-2	GWB	PNT	ACP	--	
123	OFFICE	LVT-2	WB-2	GWB	PNT	ACP	--	
124	OFFICE	LVT-2	WB-2	GWB	PNT	ACP	--	
125	OFFICE	LVT-2	WB-2	GWB	PNT	ACP	--	
126	OFFICE	LVT-2	WB-2	GWB	PNT	ACP	--	
127	OFFICE	LVT-2	WB-2	GWB	PNT	ACP	--	
128	OFFICE	LVT-2	WB-2	GWB	PNT	ACP	--	
129	OFFICE	LVT-2	WB-1	GWB	PNT	ACP	--	
130	STORAGE	SPORTS FLR	WB-2	CMU	PNT	ACP	--	
131	STORAGE	RES-1	RES-1	CMU / GWB	PNT	ACP	--	
C101	CORRIDOR	EXIST.	EXIST.	CMU	PNT	ACP	--	
C102	NEW CORRIDOR	VCT-1	WB-1	CMU	PNT	ACP	--	
C103	CORRIDOR	VARIES	WB-2	GWB	PNT / CT-1*	ACP	--	*CT-1 BEHIND WATER COOLER ONLY
M101	EXIST. MECH	EXIST.	EXIST.	EXIST.	EXIST.	EXIST.	EXIST.	NO WORK THIS AREA
M102	NEW MECH	CONC-1	--	CMU	--	--	--	
M103	IT	SDT	WB-2	CMU / GWB	PNT	ACP		
S101	EXIST. STAIR	EXIST.	EXIST.	EXIST.	EXIST.	EXIST.	EXIST.	NO WORK THIS AREA
S102	STAIR	LVT-2*	WB-2	CMU	PNT	--	--	*RB-1 ON STAIR TREADS, RISERS, & LANDING
T101	EXIST. TLT	EXIST.	EXIST.	EXIST.	EXIST.	ACP	--	NO WORK THIS AREA
T102	EXIST. FEMALE LOCKER ROOM	EXIST.	EXIST.	EXIST.	EXIST.	EXIST.	EXIST.	NO WORK THIS AREA
T103	EXIST. MALE LOCKER ROOM	EXIST.	EXIST.	EXIST.	EXIST.	EXIST.	EXIST.	NO WORK THIS AREA
T104	M. TLT	RES-1	RES-1	GWB	PT / PNT*	GYP.	PNT	*SEE TILE ELEVATIONS
T105	W. TLT	RES-1	RES-1	GWB	PT / PNT*	GYP.	PNT	*SEE TILE ELEVATIONS
V101	EXIST. SECURE VEST.	EXIST.	EXIST.	EXIST.	EXIST.	EXIST.	EXIST.	NO WORK THIS AREA

DOOR AND FRAME SCHEDULE

OPENING NO./ DOOR MARK	DOOR ELEV	DOOR PAIR	DOOR MATL	DOOR WIDTH	DOOR HEIGHT	FIRE RATING	FRAME ELEV	FRAME MATL	FRAME HEAD	FRAME JAMB	THRESH	HDWRE SET	AC	AO	KEYNOTES
LOWER FLOOR															
102	F	--	WD	3' - 0"	7' - 0"	--	F2	HM	2H / A602	2J / A602	TH-2 / A602	05			--
103	EXIST.	--	EXIST.	3' - 0"	7' - 0"	--	EXIST.	EXIST.	EXIST	EXIST	TH-2 / A602	E08			EXISTING DOOR AND FRAME TO REMAIN
107	F	--	WD	3' - 0"	7' - 0"	--	EXIST.	EXIST.	--	--	TH-2 / A602	E05			PROVIDE NEW DOOR - EXISTING FRAME TO REMAIN
108	F	--	WD	3' - 0"	7' - 0"	--	EXIST.	EXIST.	--	--	TH-2 / A602	E04			PROVIDE NEW DOOR - EXISTING FRAME TO REMAIN
110A	FG	--	WD	3' - 0"	7' - 0"	--	F1	HM	1H / A602	1J / A602	TH-2 / A602	01A			--
110B	FG	--	WD	3' - 0"	7' - 0"	--	F1	HM	1H / A602	1J / A602	TH-2 / A602	01			--
110C	F	--	WD	3' - 0"	7' - 0"	--	F1	HM	1H / A602	1J / A602	TH-2 / A602	05			--
120	HG	--	WD	3' - 0"	7' - 0"	--	F1	HM	1H / A602	1J / A602	TH-2 / A602	01B			--
120.1	OH	--	MTL	6' - 0"	4' - 0"	--	--	ALUM.	--	--	--	00			ROLLING COUNTER DOOR
121A	VT	--	WD	3' - 0"	7' - 0"	--	F1	HM	1H / A602	1J / A602	TH-2 / A602	12			--
121B	F	PAIR	WD	6' - 0"	7' - 0"	--	F2	HM	2H / A602	2J / A602	TH-2 / A602	08P			--
121C	VT	--	WD	3' - 0"	7' - 0"	--	F1	HM	1H / A602	1J / A602	TH-2 / A602	12ALK	•		--
122.1	HG	PAIR	WD	6' - 0"	7' - 0"	--	F1	HM	1H / A602	1J / A602	TH-2 / A602	13P	•		--
122.2	VT	PAIR	INSUL MTL	6' - 0"	7' - 0"	--	F2	HM	3H / A602	3J / A602	TH-1 / A602	B01P	•		LEVEL 3 BALLISTIC RATING
123	F	--	WD	3' - 0"	7' - 0"	--	F1	HM	1H / A602	1J / A602	TH-2 / A602	05			--
124	F	--	WD	3' - 0"	7' - 0"	--	F1	HM	1H / A602	1J / A602	TH-2 / A602	05			--
125	F	--	WD	3' - 0"	7' - 0"	--	F1	HM	1H / A602	1J / A602	TH-2 / A602	05			--
126	F	--	WD	3' - 0"	7' - 0"	--	F1	HM	1H / A602	1J / A602	TH-2 / A602	05			--
127	F	--	WD	3' - 0"	7' - 0"	--	F1	HM	1H / A602	1J / A602	TH-2 / A602	05			--
128	F	--	WD	3' - 0"	7' - 0"	--	F1	HM	1H / A602	1J / A602	TH-2 / A602	05			--
129	F	--	WD	3' - 0"	7' - 0"	--	F1	HM	1H / A602	1J / A602	TH-2 / A602	05			--
130	HG	PAIR	WD	6' - 0"	7' - 0"	--	F2	HM	2H / A602	2J / A602	TH-2 / A602	07PA			--
131	F	PAIR	WD	6' - 0"	7' - 0"	--	F2	HM	2H / A602	2J / A602	TH-2 / A602	13PA	•		--
C102	HG	--	WD	3' - 0"	7' - 0"	--	F2	HM	4H / A602	4J / A602	TH-2 / A602	13	•		--
C103	VT	--	INSUL MTL	3' - 0"	7' - 0"	--	F2	HM	3H / A602	3J / A602	TH-1 / A602	B01B	•	•	LEVEL 3 BALLISTIC RATING
M102	F	PAIR	INSUL MTL	6' - 0"	7' - 0"	--	F2	HM	3H / A602	3J / A602	TH-1 / A602	B01P			--
M103	F	--	WD	5' - 0"	7' - 0"	--	F1	HM	1H / A602	1J / A602	TH-2 / A602	14	•		OFFSET 3'-0" & 2'-0"
S102.1	VT	--	INSUL MTL	3' - 0"	7' - 0"	--	F2	HM	3H / A602	3J / A602	TH-1 / A602	B01A	•		LEVEL 3 BALLISTIC RATING
S102.2	VT	--	WD	3' - 0"	7' - 0"	60	F2	HM	2H / A602	2J / A602	TH-2 / A602	12A	•		--
T104	F	--	WD	3' - 0"	7' - 0"	--	F1	HM	1H / A602	1J / A602	TH-2 / A602	02			1/2" UNDERCUT
T105	F	--	WD	3' - 0"	7' - 0"	--	F1	HM	1H / A602	1J / A602	TH-2 / A602	02			1/2" UNDERCUT
UPPER FLOOR															
210	F	--	WD	3' - 0"	7' - 0"	--	F1	HM	1H / A602	1J / A602	TH-2 / A602	05			--
212	F	--	WD	3' - 0"	7' - 0"	--	F1	HM	1H / A602	1J / A602	TH-2 / A602	05			--
213	F	--	WD	3' - 0"	7' - 0"	--	F1	HM	1H / A602	1J / A602	TH-2 / A602	05			--
214	F	--	WD	3' - 0"	7' - 0"	--	F1	HM	1H / A602	1J / A602	TH-2 / A602	05			--
215	F	--	WD	3' - 0"	7' - 0"	--	F1	HM	1H / A602	1J / A602	TH-2 / A602	05			--
216	F	--	WD	3' - 0"	7' - 0"	--	F1	HM	1H / A602	1J / A602	TH-2 / A602	05			--
217	F	--	WD	3' - 0"	7' - 0"	--	F1	HM	1H / A602	1J / A602	TH-2 / A602	05			--
218A	F	--	WD	3' - 0"	7' - 0"	--	F1	HM	1H / A602	1J / A602	TH-2 / A602	04A			1/2" UNDERCUT
220	F	--	WD	3' - 0"	7' - 0"	--	F1	HM	1H / A602	1J / A602	TH-2 / A602	08			--
230	HG	--	WD	3' - 0"	7' - 0"	--	F1	HM	1H / A602	1J / A602	TH-2 / A602	13	•		--
231	F	--	WD	3' - 0"	7' - 0"	--	F1	HM	1H / A602	1J / A602	TH-2 / A602	05A			--
233	F	--	WD	3' - 0"	7' - 0"	--	F1	HM	1H / A602	1J / A602	TH-2 / A602	08			--
234	F	--	WD	3' - 0"	7' - 0"	--	F1	HM	1H / A602	1J / A602	TH-2 / A602	05			--
235	F	--	WD	3' - 0"	7' - 0"	--	F1	HM	1H / A602	1J / A602	TH-2 / A602	05			--
236	F	--	WD	3' - 0"	7' - 0"	--	F1	HM	1H / A602	1J / A602	TH-2 / A602	05			--
237	F	--	WD	3' - 0"	7' - 0"	--	F1	HM	1H / A602	1J / A602	TH-2 / A602	05			--
238	F	--	WD	3' - 0"	7' - 0"	--	F1	HM	1H / A602	1J / A602	TH-2 / A602	05			--
241	F	--	WD	3' - 0"	7' - 0"	--	F1	HM	1H / A602	1J / A602	TH-2 / A602	05			--
242	VT	--	WD	3' - 0"	7' - 0"	--	F1	HM	1H / A602	1J / A602	TH-2 / A602	05			--
243	F	--	WD	3' - 0"	7' - 0"	--	F1	HM	1H / A602	1J / A602	TH-2 / A602	05			--
244	VT	--	WD	3' - 0"	7' - 0"	--	F2	HM	2H / A602	2J / A602	TH-2 / A602	05A			--
245	F	--	WD	3' - 0"	7' - 0"	--	F2	HM	2H / A602	2J / A602	TH-2 / A602	01C			--
246	F	--	WD	3' - 0"	7' - 0"	--	F2	HM	2H / A602	2J / A602	TH-2 / A602	01C			--
247	F	--	WD	3' - 0"	7' - 0"	--	F2	HM	2H / A602	2J / A602	TH-2 / A602	13A	•		--
248	VT	--	WD	3' - 0"	7' - 0"	--	F2	HM	2H / A602	2J / A602	TH-2 / A602	07			--
C204	HG	--	WD	3' - 0"	7' - 0"	--	F1	HM	4H / A602	4J / A602	TH-2 / A602	13	•		--
C205	F	--	WD	3' - 0"	7' - 0"	--	F2	HM	2H / A602	2J / A602	TH-2 / A602	13	•		--
C206	VT	--	WD	3' - 0"	7' - 0"	--	F2	HM	2H / A602	2J / A602	TH-2 / A602	B01	•		LEVEL 3 BALLISTIC RATING
S202	VT	--	WD	3' - 0"	7' - 0"	60	F2	HM	2H / A602	2J / A602	TH-2 / A602	12A	•		--
T204	F	--	WD	3' - 0"	7' - 0"	--	F1	HM	1H / A602	1J / A602	TH-2 / A602	02			1/2" UNDERCUT
T205	F	--	WD	3' - 0"	7' - 0"	--	F1	HM	1H / A602	1J / A602	TH-2 / A602	02			1/2" UNDERCUT
T206	F	--	WD	3' - 0"	7' - 0"	--	F2	HM	2H / A602	2J / A602	TH-2 / A602	04B			--
V201	SF	PAIR	ALUM	6' - 0"	7' - 0"	--	SF/CW	EXIST.	EXIST.	EXIST.	EXIST.	E15P	•		NEW PAIR DOORS AND HARDWARE IN EXISTING FRAME
V202.1	SF	PAIR	ALUM	6' - 0"	7' - 10"	--	SF/CW	ALUM.	8H / A602	8J / A602	TH-1 / A602	15P		•	--
V202.2	SF	PAIR	ALUM	6' - 0"	7' - 10"	--	SF/CW	ALUM.	8H / A602	8J / A602	TH-2 / A602	15PA	•	•	--

ROOM FINISH LEGEND (BASIS OF DESIGN)

TAG	SUPPLIER/ MANUFACTURER	PATTERN/ PRODUCT	COLOR NAME	REMARKS
06 41 00 INTERIOR ARCHITECTURAL WOODWORK				
PL-1	WILSONART	STANDARD PLASTIC LAMINATE	TBD	CASEWORK
09 30 00 TILING				
CT-1	UMORE BY SPARTAN SURFACES	BOLOGNA CERAMIC MOSAICS; 3x12 WALL TILE	ADMIRAL	BEHIND WATER COOLERS, TYP.
PT-1	UMORE BY SPARTAN SURFACES	PALERMO PORCELAIN TILE 12x24	HAZELWOOD	VERTICAL STACKED PATTERN
PT-2	UMORE BY SPARTAN SURFACES	PALERMO PORCELAIN TILE 12x12 STACKED MOSAIC	HAZELWOOD	VERTICAL STACKED PATTERN
09 51 00 ACOUSTICAL CEILINGS				
ACP-1	ARMSTRONG WORLD INDUSTRIES, INC.	MESA 15/16" ANGLED TEGULAR, 24x24	WHITE	TYPICAL
ACP-2	ARMSTRONG WORLD INDUSTRIES, INC.	FINE FISSURED HIGH NRC 15/16" ANGLED TEGULAR, 24x24	WHITE	OPEN OFFICE AREAS
09 65 13 RESILIENT BASE & ACCESSORIES				
RB-1	JOHNSONITE BY TARKETT	TYPE TS RUBBER STAIR TREAD W/ INTEGRATED RISER	TBD	
WB-1	JOHNSONITE BY TARKETT	TRADITIONAL VINYL WALL BASE	18 NAVY BLUE	@EXISTNIG BUILDING
WB-2	JOHNSONITE BY TARKETT	TRADITIONAL VINYL WALL BASE	40 BLACK	@ NEW ADDITION
09 65 19 RESILIENT TILE FLOORING				
LVT-1	GERFLOR USA	CREATION GROVEPOINT	0231 PIN OAK	
LVT-2	GERFLOR USA	CREATION WELLPOINT 12X24 TILE	1029 DONAN	NEW FIELD COLOR
LVT-3	GERFLOR USA	CREATION GUIDEPOINT 12X24 TILE	1009 MUTED CORNFLOWER	ACCENT COLOR
LVT-4	GERFLOR USA	CREATION WELLPOINT 12X24 TILE	1030 FARA	NEUTRAL ACCENT
SDT-1	ARMSTRONG WORLD INDUSTRIES, INC.	EXCELON SDT STATIC DISSIPATIVE TILE	TBD	
VCT-1	ARMSTRONG WORLD INDUSTRIES, INC.	STANDARD EXCELON VCT VINYL COMPOSITION TILE	MATCH EXISTING	
09 65 66 RESILIENT ATHLETIC FLOORING				
SF-1	CAPRI COLLECTIONS	FITNESS & REC 8MM ROLLED SPORTS FLOOR	BLUE NIGHT RTL4024	
09 67 23 RESINOUS FLOORING				
RES-1	SHERWIN WILLIAMS	HYBRI-FLEX EQ	TBD	FLOOR COVERING & BUILT-UP WALL BASE
09 68 13 TILE CARPETING				
CPT-1	MATTER SURFACES	ARRIVAL COLLECTION SUPER NOP 52 TILETUFF STUFF II COLLECTION; STEP UP II CARPET TILE	CHARCOAL	WALKOFF CARPET
09 84 33 SOUND ABSORBING WALL UNITS				
AWT-1	WOLF GORDON	GATHER ACOUSTICAL V-GROOVE ENGRAVED GREGORI	TBD	DIRECT ADHERE TO WALL FROM WALL BASE TO CEILING HEIGHT
09 90 00 PAINTING AND COATING				
PNT-1	VALSPAR	SEE SPECS FOR TYPE	7002-12 QUAIL EGG	WALL - FIELD COLOR
PNT-2	SHERWIN WILLIAMS	SEE SPECS FOR TYPE	TBD	ACCENT PAINT COLOR
PNT-CLG	SHERWIN WILLIAMS	SEE SPECS FOR TYPE	SW7007 CEILING BRIGHT WHITE	GWB CEILING - FIELD COLOR
PNT-STRUCT.	SHERWIN WILLIAMS	SEE SPECS FOR TYPE	TBD	EXPOSED STRUCTURE
PNT-TRIM	SHERWIN WILLIAMS	SEE SPECS FOR TYPE	MATCH WALL COLOR	HM DOORS AND FRAMES
12 36 61 SIMULATED STONE COUNTERTOPS				
QT-1	DUPONT CORIAN	QUARTZ	PRICE GROUP 2	BREAKROOM/ KITCHEN COUNTERTOPS
SS-1	DUPONT CORIAN	SOLID SURFACE	PRICE GROUP 2	TYPICAL COUNTERTOPS

ORIGINAL SIZE : ARCH E1 (30X42) | 5/5/2026 3:00:28 AM
C:\Users\trookstool.SPECTRUM\OneDrive - Spectrum Design PC\Documents\24112 Arch Sheriff R26 Central_trookstool@spectrumpc.com.rvt

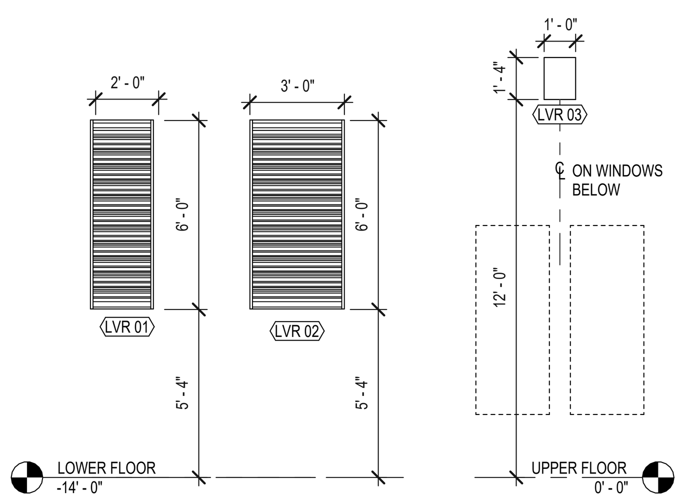

LOUVERS

SCALE: 1/4" = 1'-0"

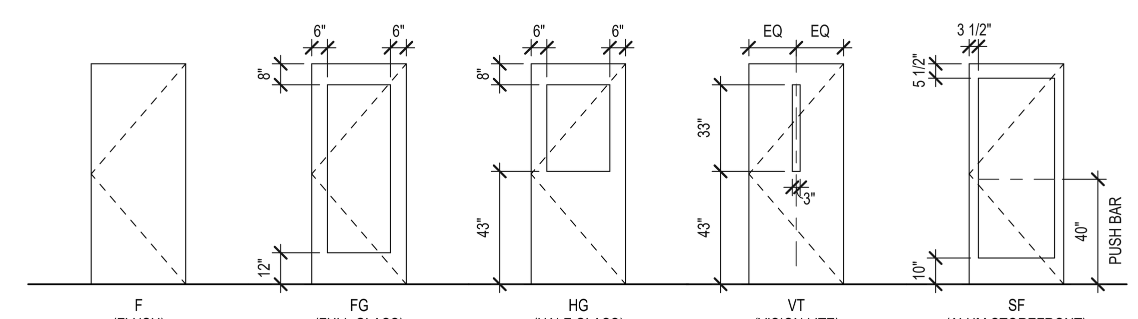

DOOR ELEVATION TYPES

SCALE: 1/4" = 1'-0"

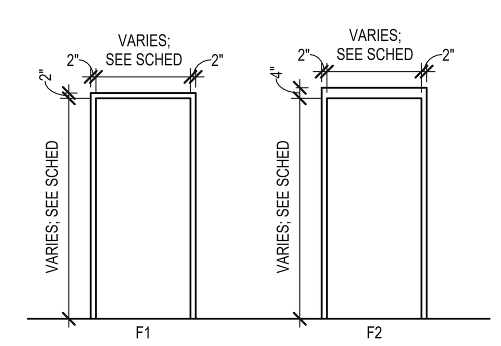

FRAME ELEVATION TYPES

SCALE: 1/4" = 1'-0"

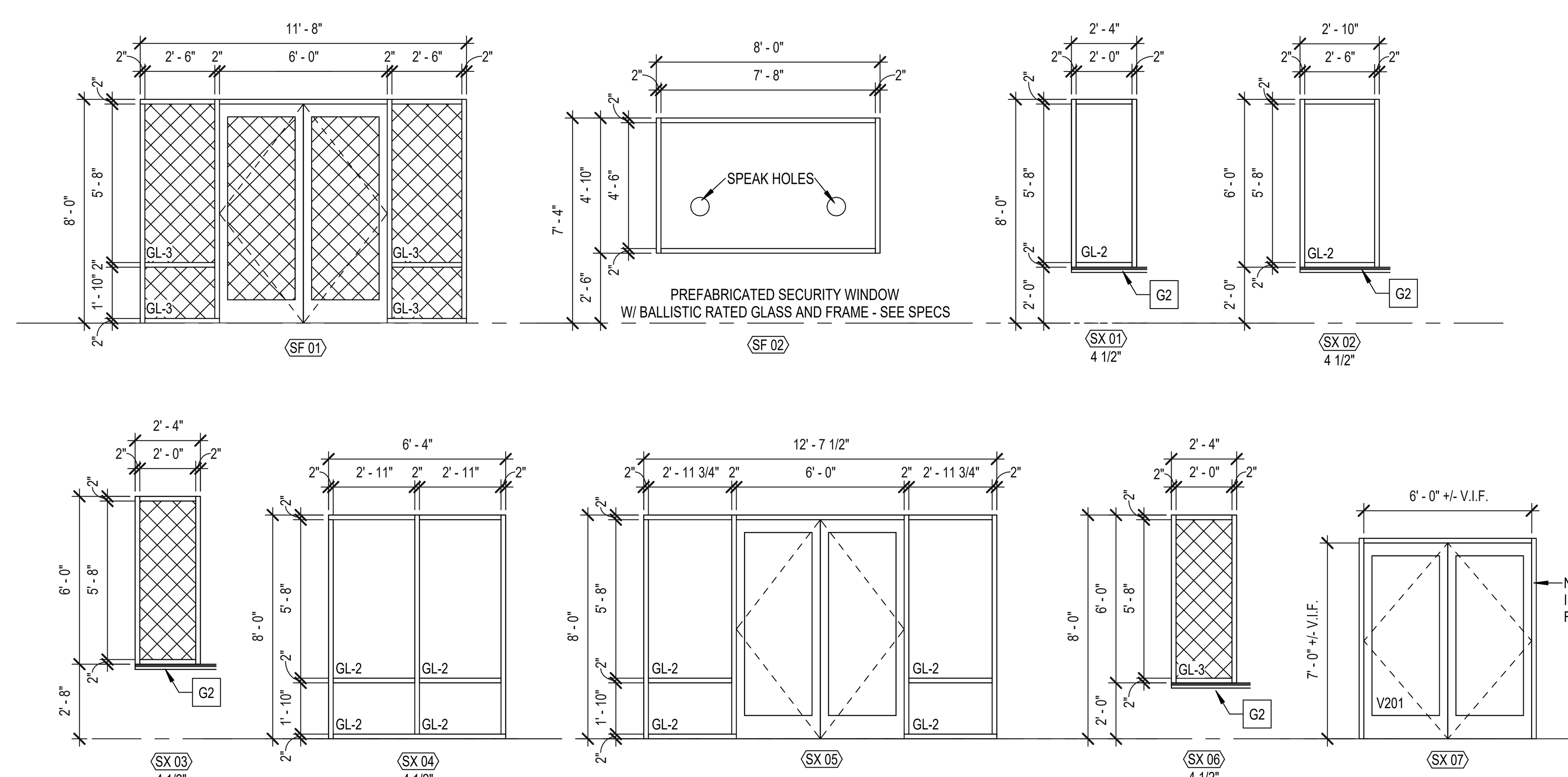

STOREFRONT ELEVATION TYPES

SCALE: 1/4" = 1'-0"

DOOR SCHEDULE & SIGNAGE GENERAL NOTES

GN-1: FIRE RATING INDICATED IN SCHEDULE APPLIES TO DOORS AND FRAMES.

GN-2: ALL HOLLOW METAL DOOR FRAMES IN MASONRY OR CONCRETE WALLS SHALL BE GROUTED SOLID. BITUMINOUS COATING SHALL BE APPLIED TO BACK SIDE OF FRAMES BEFORE GROUTING.

GN-3: SEE SPECIFICATIONS FOR DOOR HARDWARE SETS. DOOR LOCKING HARDWARE SHALL BE "KEYED" TO OWNER'S STANDARD. CONTRACTOR TO COORDINATE WITH OWNER AND DOOR LOCKING HARDWARE MANUFACTURER.

DOOR SCHEDULE INDICATORS

MATERIAL / FINISH LEGEND:
AL - ALUMINUM (SF/ CW)
HM - HOLLOW METAL
EPT - EPOXY PAINT
PT - PAINT
STL - STEEL
S/V - STAIN / VARNISH
WD - WOOD SOLID CORE

ADDITIONAL ABBREVIATIONS
AC - ACCESS CONTROL
AO - AUTO OPERATOR
PR - PAIR
SF/CW - STOREFRONT / CURTAIN WALL

FRAME ELEV -
SEE FRAME ELEVATIONS
FOR HEAD, JAMB, SILL DETAILS

FRAMED OPENINGS GENERAL NOTES

GN-1: CONTRACTOR TO PROVIDE STOREFRONT AND CURTAIN WALL MANUFACTURER'S PREFORMED SUB-SILL, BASE FLASHING, AND END DAMS, TYPICAL.

GN-2: DIMENSIONS SHOWN ARE NOMINAL AND PROVIDED FOR DESIGN INTENT. CONTRACTOR TO FIELD VERIFY ROUGH OPENINGS, AND ACCOUNT FOR JOINTS, SHIMS, SEALANT, ETC.

GN-3: EXTERIOR FRAMES ARE VIEWED FROM EXTERIOR OF BUILDING, INTERIOR WINDOW FRAMES ARE VIEWED FROM EXTERIOR OF ROOM, U.N.O.

GN-4: SOME FRAME TYPES ARE REPEATED. SEE FLOOR PLANS AND ELEVATIONS FOR LOCATIONS AND QUANTITIES.

GN-5: JOINTS SHOWN IN ELEVATION BETWEEN STOREFRONT MEMBERS ARE NOT INTENDED TO SHOW ACTUAL JOINT LOCATIONS.

GN-6: DEPTH OF STOREFRONT FRAMES TO BE 4 1/2" U.N.O.

GN-7: GLAZE ALL OPENINGS IN FRAMES, U.N.O.

GN-8: ALL GLAZING SHALL BE SAFETY GLASS, U.N.O.

FRAMED OPENINGS INDICATOR

SF XX.X — FRAME TYPE / FRAME NO.
XX" — FRAME DEPTH

CW = CURTAIN WALL
LVR = LOUVER
HM = HOLLOW METAL
SF = STOREFRONT (INTERIOR)
SX = STOREFRONT (EXTERIOR)
WN = WINDOW

GLAZING / PANEL LEGEND

GL-1 = 1/4" CLEAR
GL-2 = 1" INSULATED
GL-3 = 1" INSULATED SPANDREL
GL-4 = 1" INSULATED W/ FROSTED FILM
GL-6 = 1" INSULATED W/ SAFETY FILM
IP = INSULATED METAL PANEL

MINIMUM DOOR CLEARANCE LEGEND

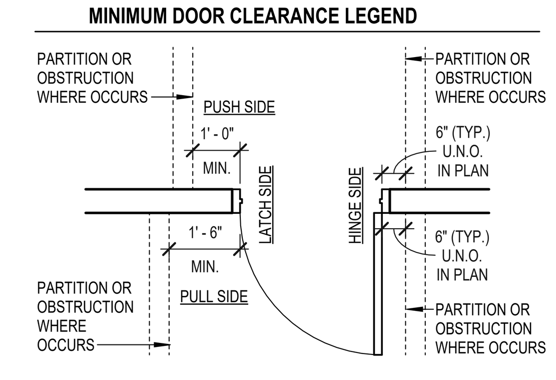

ANSI 117.1 2017
WHERE LATCH SIDE OF DOORWAYS ARE LOCATED ADJACENT TO A PERPENDICULAR PARTITION AND NOT OTHERWISE DIMENSIONED:

• PUSH SIDE - PROVIDE 1'-0" MIN. CLEAR BETWEEN INSIDE EDGE OF FRAME OPENING AND FINISH FACE OF ADJACENT PARTITION.

• PULL SIDE - PROVIDE 1'-6" MIN. CLEAR BETWEEN INSIDE EDGE OF FRAME OPENING AND FINISH FACE OF ADJACENT PARTITION.

SPECTRUM DESIGN
architects | engineers

Plaza Suite 1
10 Church Avenue, SE
Roanoke, VA 24011

540.342.6001
spectrumpc.com

BEDFORD COUNTY SHERIFF'S OFFICE EXPANSION

SPECTRUM DESIGN PROJECT NO.: **24112**

COMMONWEALTH OF VIRGINIA
TRAVIS ROOKSTOOL
Lic. No. 17288
05.04.2026
ARCHITECT

PROJ. MGR.: **JM** CHECKED BY: **GEG** DRAWN BY: **TLR, MIG**

SHEET ISSUE DATE: **05.04.2026**

PROJECT PHASE: **BID DOCUMENTS**

SHEET REVISIONS:

PLAN NORTH SITE NORTH

SHEET NAME:
DOOR AND ROOM FINISH SCHEDULE

SHEET NUMBER:
A601

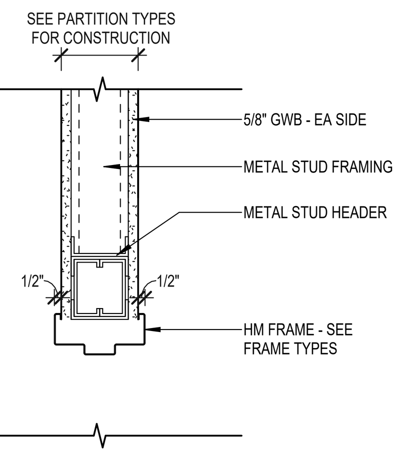

1H HEAD DETAIL - HM @ MTL STUD

A602 SCALE: 1 1/2" = 1'-0"

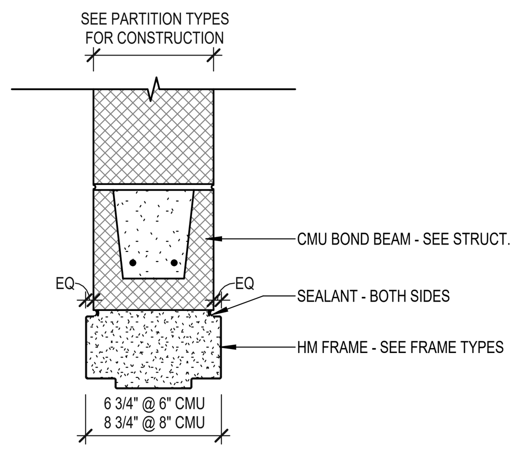

2H HEAD DETAIL - HM @ CMU

A602 SCALE: 1 1/2" = 1'-0"

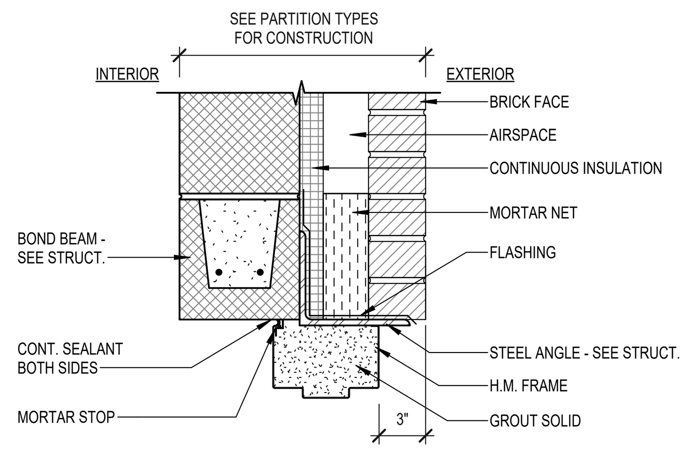

3H HEAD DTL - HM @ CMU / BRICK

A602 SCALE: 1 1/2" = 1'-0"

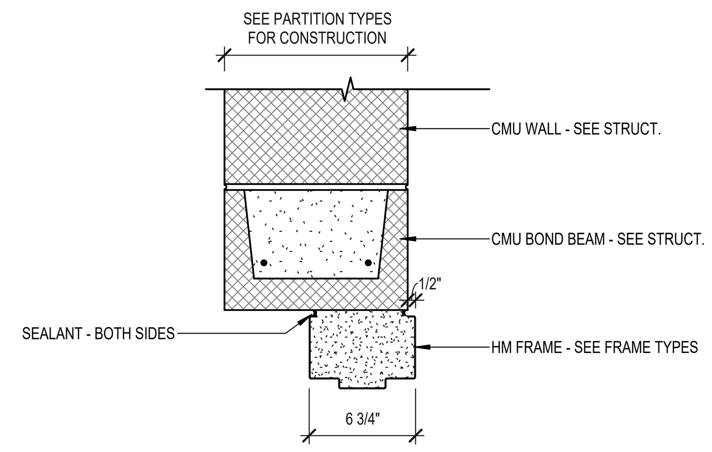

4H HEAD DETAIL - HM @ CMU

A602 SCALE: 1 1/2" = 1'-0"

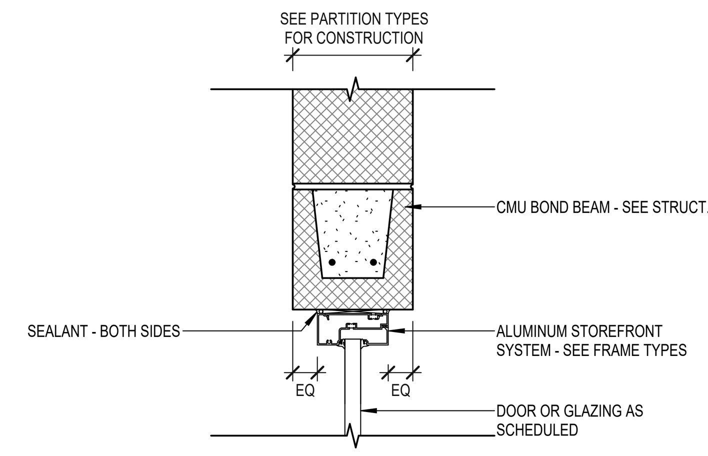

5H HEAD DETAIL - SF @ CMU

A602 SCALE: 1 1/2" = 1'-0"

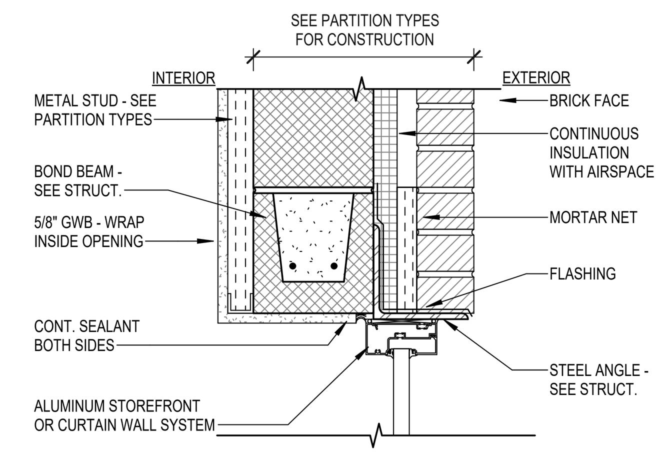

6H HEAD DTL - SF @ CMU / BRICK

A602 SCALE: 1 1/2" = 1'-0"
REF: A311

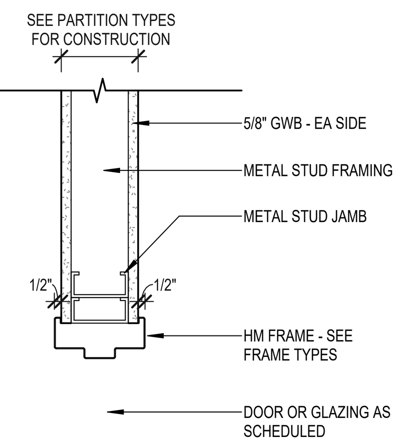

1J JAMB DETAIL - HM @ MTL STUD

A602 SCALE: 1 1/2" = 1'-0"

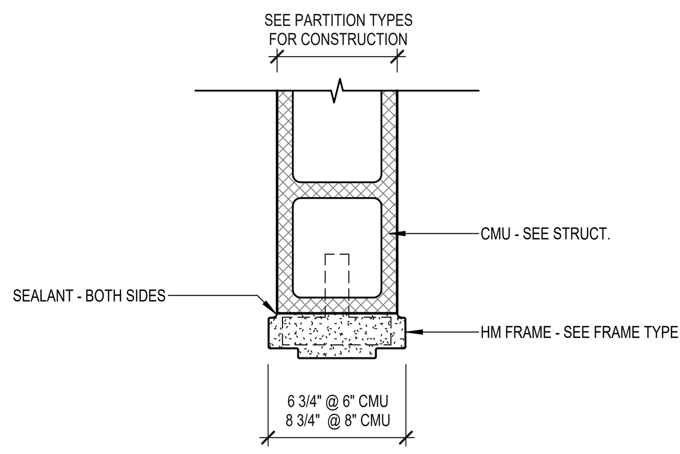

2J JAMB DETAIL - HM @ CMU

A602 SCALE: 1 1/2" = 1'-0"

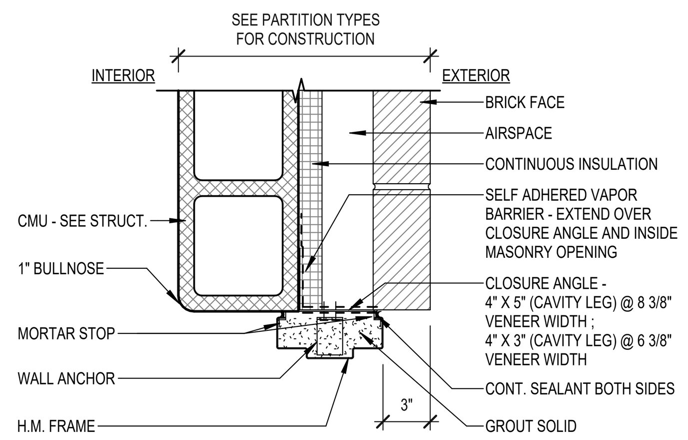

3J JAMB DTL - HM @ CMU / BRICK

A602 SCALE: 1 1/2" = 1'-0"

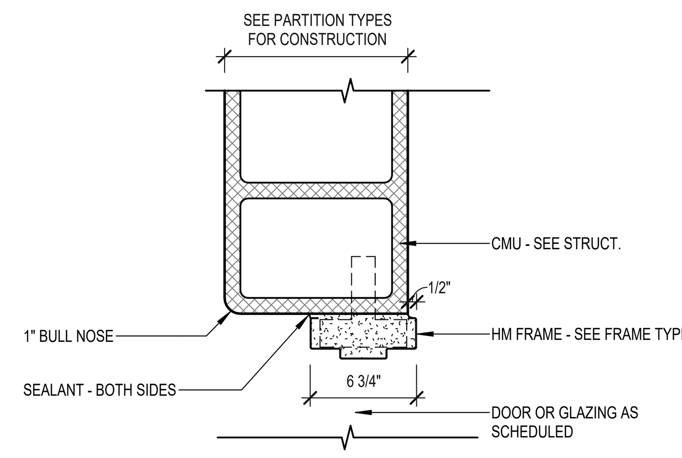

4J JAMB DETAIL - HM @ CMU

A602 SCALE: 1 1/2" = 1'-0"

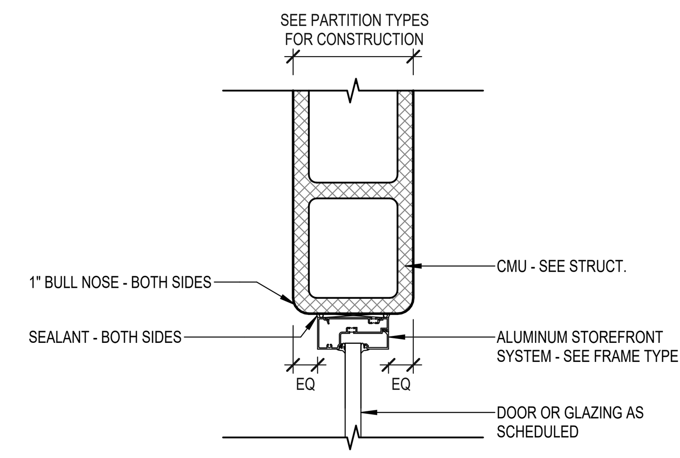

5J JAMB DETAIL - SF @ CMU

A602 SCALE: 1 1/2" = 1'-0"

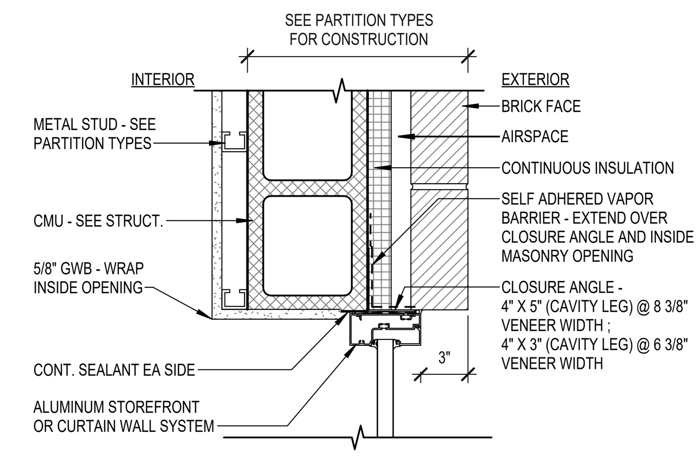

6J JAMB DTL - SF @ CMU / BRICK

A602 SCALE: 1 1/2" = 1'-0"
REF: A311

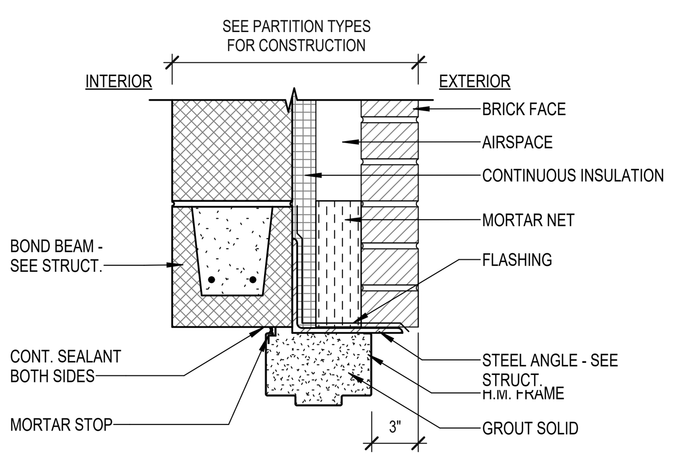

7H HEAD DTL - HM @ MS / BRICK

A602 SCALE: 1 1/2" = 1'-0"
REF: A311

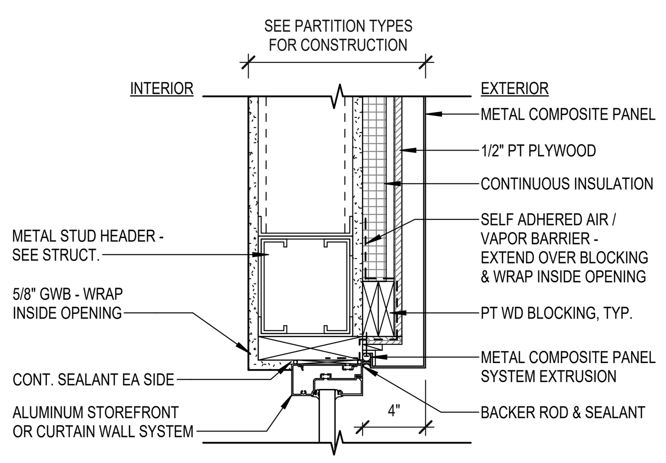

8H HEAD DTL - SF @ MS / MCM

A602 SCALE: 1 1/2" = 1'-0"

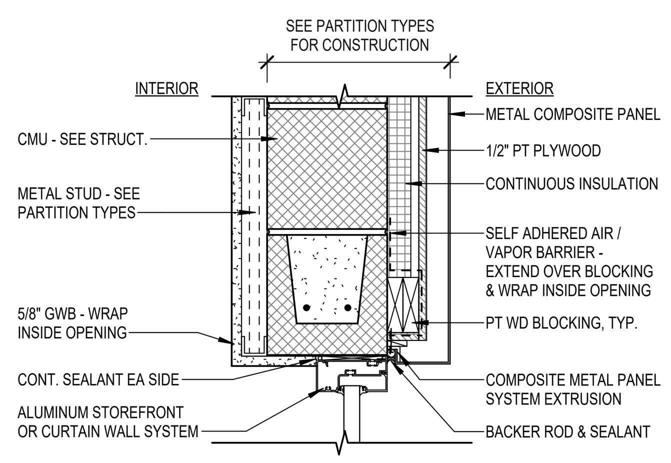

9H HEAD DTL - SF @ CMU / MCM

A602 SCALE: 1 1/2" = 1'-0"

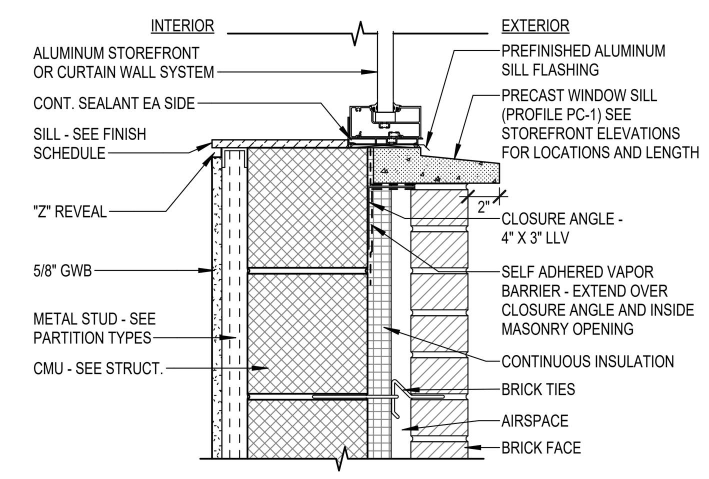

6S SILL DTL - SF @ CMU / BRICK

A602 SCALE: 1 1/2" = 1'-0"
REF: A311

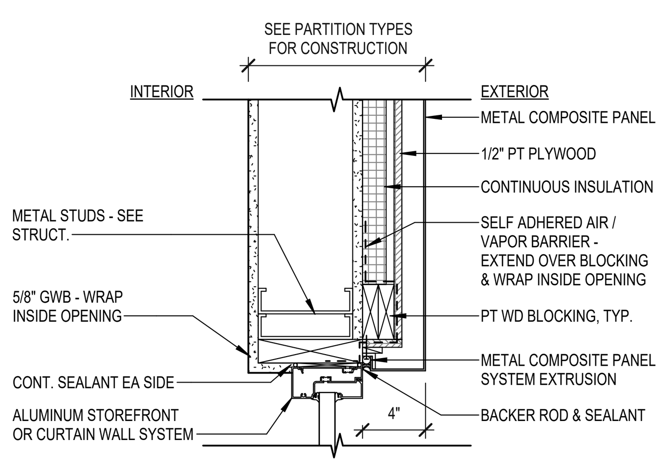

8J JAMB DTL - SF @ MS / MCM

A602 SCALE: 1 1/2" = 1'-0"

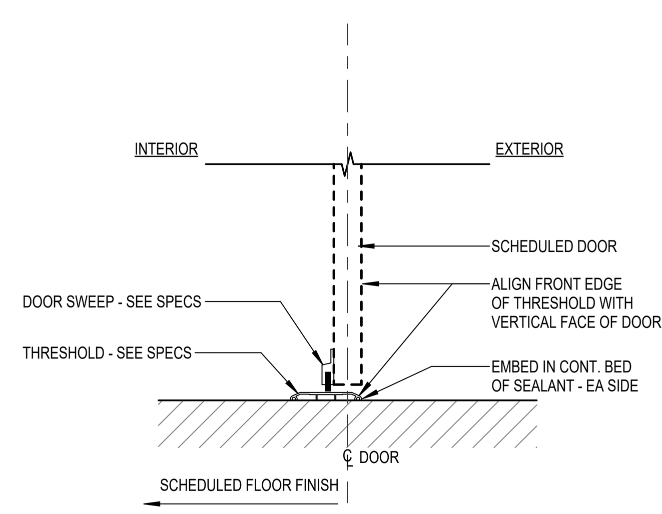

TH1 TYP. THRESHOLD

A602 SCALE: 1 1/2" = 1'-0"

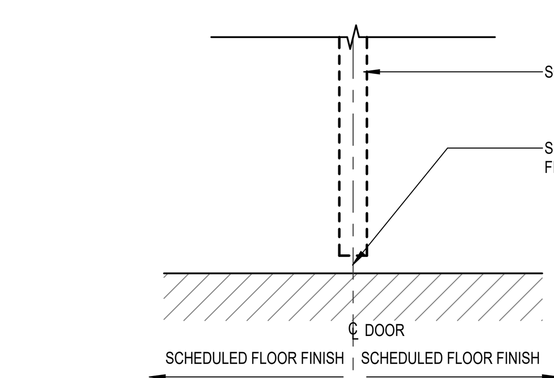

TH2 TYP. DOOR SILL DETAIL

A602 SCALE: 1 1/2" = 1'-0"

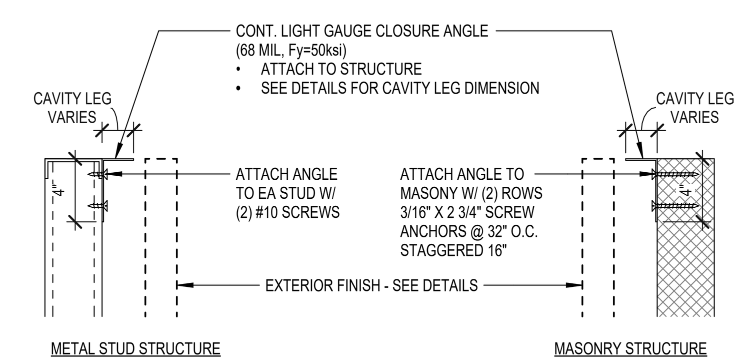

TYP. CLOSURE ANGLE

N.T.S.

0 0.5' 1' 2'
SCALE: 1 1/2" = 1' - 0"

ORIGINAL SIZE : ARCH E1 (30X42) | 5/5/2026 3:00:34 AM
C:\Users\trookstool.SPECTRUM\OneDrive - Spectrum Design PC\Documents\24112 Arch Sheriff R26 Central_trookstool@spectrumpc.com.rvt

SPECTRUM DESIGN
architects | engineers

Plaza Suite 1
10 Church Avenue, SE
Roanoke, VA 24011

540.342.6001
spectrumpc.com

BEDFORD COUNTY SHERIFF'S OFFICE EXPANSION

SPECTRUM DESIGN PROJECT NO.: **24112**

COMMONWEALTH OF VIRGINIA
TRAVIS ROOKSTOOL
Lic. No. 17288
05.04.2026
ARCHITECT

PROJ. MGR.:	CHECKED BY:	DRAWN BY:
JM	**GEG**	**TLR, MIG**

SHEET ISSUE DATE:
05.04.2026

PROJECT PHASE:
BID DOCUMENTS

SHEET REVISIONS:

PLAN NORTH — SITE NORTH

SHEET NAME:
HEAD, JAMB, & SILL DETAILS

SHEET NUMBER:
A602

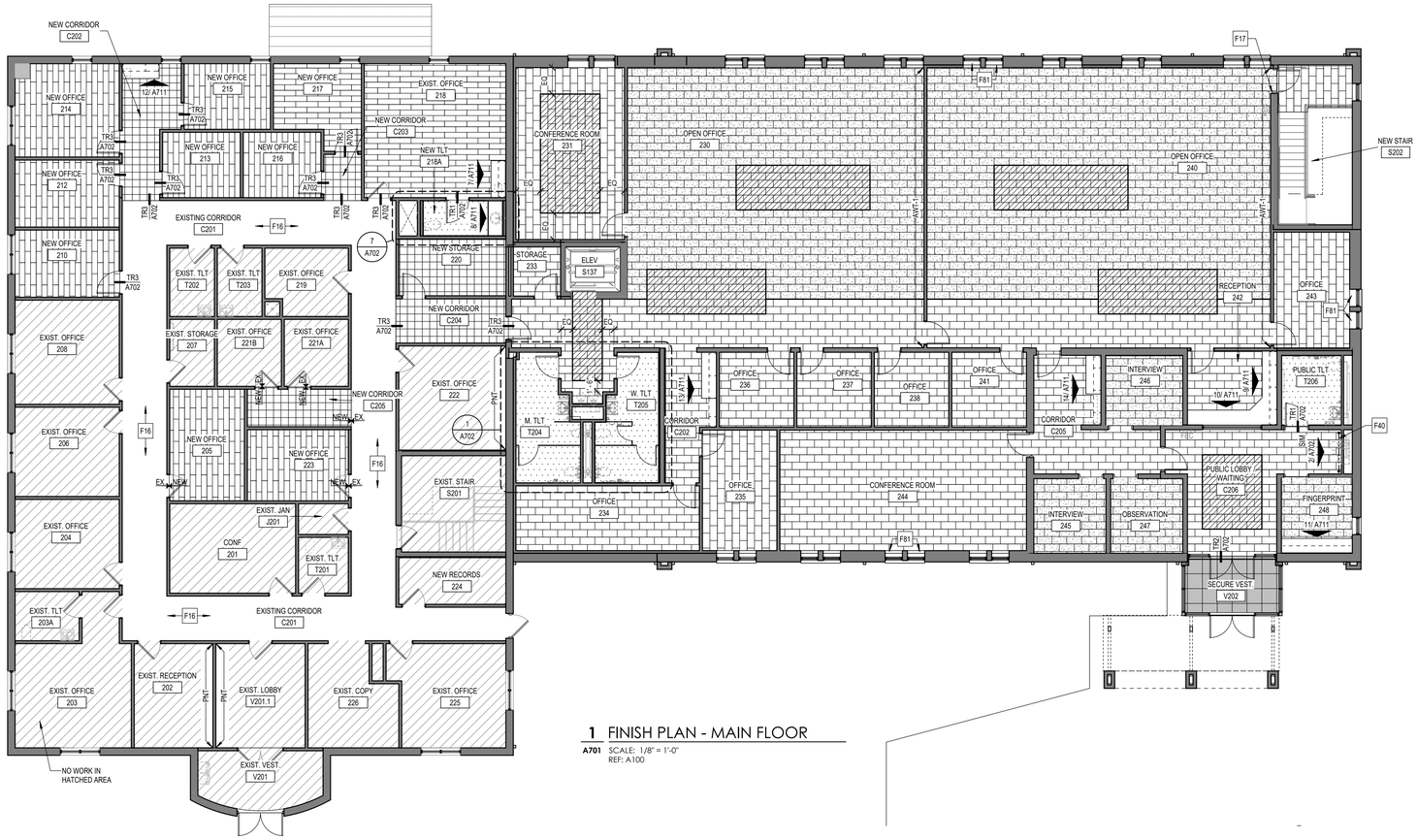

1 FINISH PLAN - MAIN FLOOR

A701 SCALE: 1/8" = 1'-0"
REF: A100

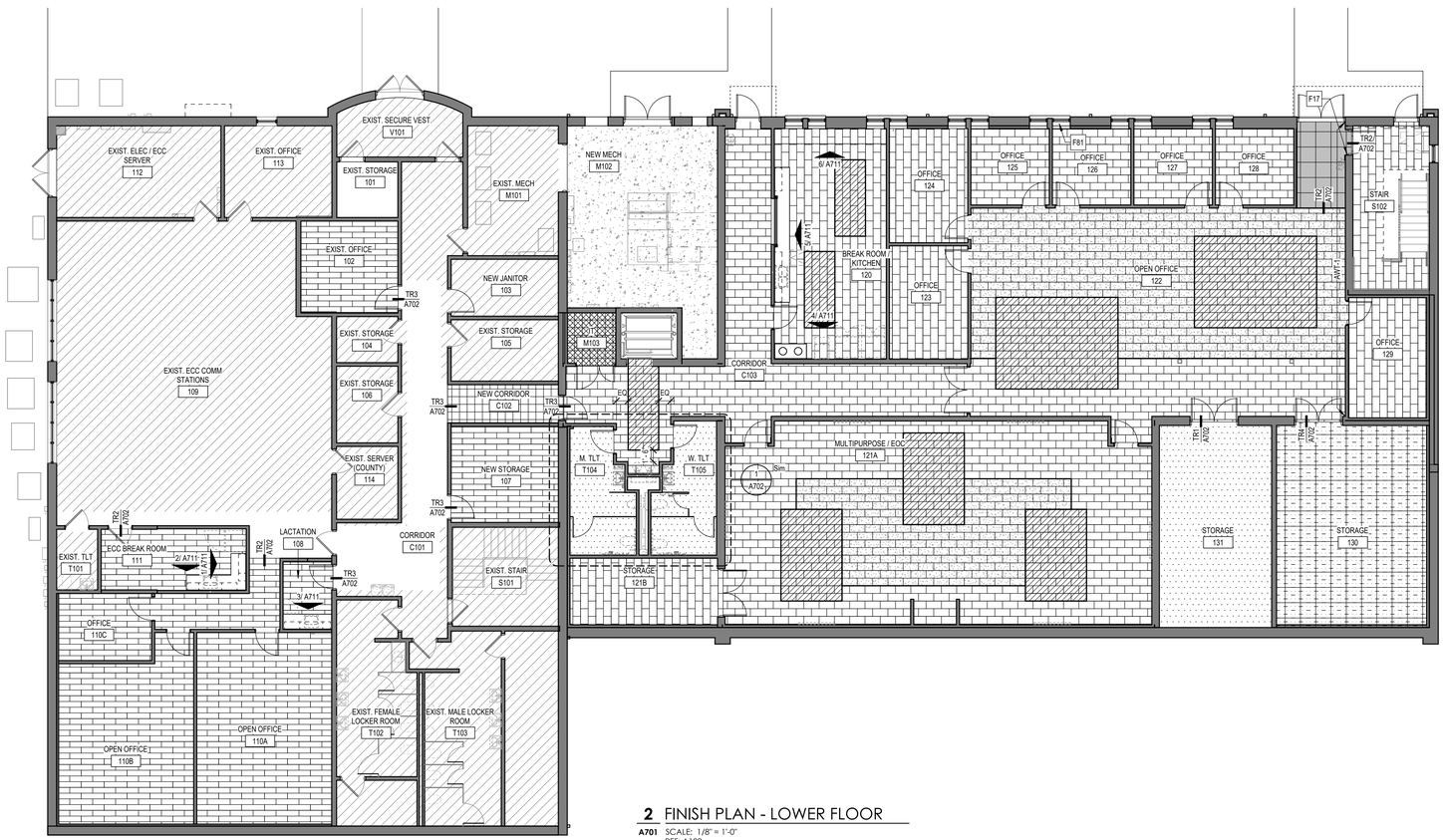

2 FINISH PLAN - LOWER FLOOR

A701 SCALE: 1/8" = 1'-0"
REF: A100

INTERIOR ELEVATIONS & FINISHES GENERAL NOTES

FINISH PLAN ROOM TAG LEGEND:

ROOM NAME
RM ###
WALL
BASE
FLOOR

GN-1: ACTUAL FINISH COLORS AND PATTERNS WILL BE SELECTED DURING CONSTRUCTION ADMINISTRATION FROM THE PROVIDED MANUFACTURER'S FULL RANGE INCLUDING PREMIUM COLORS.

GN-2: NOTES REGARDING FINISH COLORS AND ACCENT PAINT COLORS ARE NOT LIMITED TO THE A700-SERIES DRAWINGS. REFER ALSO TO REFLECTED CEILING PLANS, INTERIOR ELEVATIONS, SECTIONS, DETAILS, AND ENLARGED PLANS.

GN-3: WHEN NO FLOOR FINISH LAYOUT IS SHOWN ON THE FINISH PLAN, THEN THAT ROOM OR AREA USES ONLY ONE COLOR OF THE FINISH NOTED. HOWEVER, THAT COLOR CAN VARY FROM ROOM TO ROOM AND AREA TO AREA

GN-4: PAINT COLORS TO TERMINATE AT INSIDE CORNERS, U.N.O.

GN-5: ALL BULKHEADS TO BE PAINTED AN ACCENT COLOR, U.N.O. WHEN ACCENT PAINT COLOR IS NOTED ON A BULKHEAD OR SOFFIT, IT APPLIES TO BOTH THE VERTICAL AND HORIZONTAL SURFACES OF SAID BULKHEAD OR SOFFIT.

GN-6: USE EPOXY PAINT AT THE FOLLOWING ROOM TYPES:
- KITCHEN & SUPPORT
- JANITOR'S CLOSETS
- TOILETS

GN-7: AT BASE CABINETS, WALL BASE TO EXTEND:
- AROUND SIDES AND ACROSS TOE KICK U.N.O.
- INSIDE CABINET AND ACROSS REAR WALL AT CABINET OPENINGS.

GN-8: NO BASE TO BE APPLIED TO BRICK WALLS (TYP.)

XX SHEET KEYNOTES

F16 PAINT EXISTING CORRIDOR WALLS FULL LENGTH (CORNER TO CORNER)

F17 WRAP ACOUSTIC WALL TREATMENT FINISH TO TERMINATE AT DOOR FRAME, TYP.

F40 WALL TILE EXTENTS, SEE ELEVATIONS

F81 WINDOW SILL - TYP. AT ALL NEW WINDOW OPENINGS - SEE FINISH SCHEDULE

FINISH LEGEND

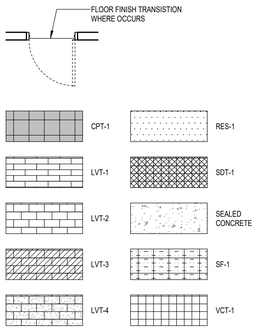

FINISH TRANSITIONS

MARK	SHEET REF	TYPE	REMARKS
TR1	A702	RESILIENT TO RESINOUS	FINISHES
TR2	A702	RESILIENT TO CARPET	FINISHES
TR3	A702	RESILIENT TO RESILIENT	FINISHES
TR4	A702	RESILIENT TO SPORTS FLOOR	FINISHES

ACCESSIBLE CHANGES IN FLOOR FINISH LEVEL

ANSI 117.1 2017 / ADASAD 2010 SECTION 302 & 303 REQUIREMENTS

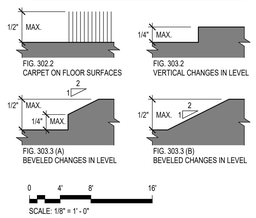

SPECTRUM DESIGN
architects | engineers

Plaza Suite 1
10 Church Avenue, SE
Roanoke, VA 24011

540.342.6001
spectrumpc.com

BEDFORD COUNTY SHERIFF'S OFFICE EXPANSION

SPECTRUM DESIGN PROJECT NO.: **24112**

COMMONWEALTH OF VIRGINIA
TRAVIS ROOKSTOOL
Lic. No. 17288
05.04.2026
ARCHITECT

PROJ. MGR.:	CHECKED BY:	DRAWN BY:
JM	GEG	TLR, MIG

SHEET ISSUE DATE:
05.04.2026

PROJECT PHASE:
BID DOCUMENTS

SHEET REVISIONS:

PLAN NORTH SITE NORTH

SHEET NAME:
FINISH PLANS

SHEET NUMBER:
A701

ORIGINAL SIZE: ARCH E1 (30X42) | 3/31/2026 3:05:40 AM
C:\Users\rookstool\SPECTRUM\OneDrive - Spectrum Design PC\Documents\24112 Arch Sheet\R24 Existing_Rookstool\spec\Dumpy.ctb

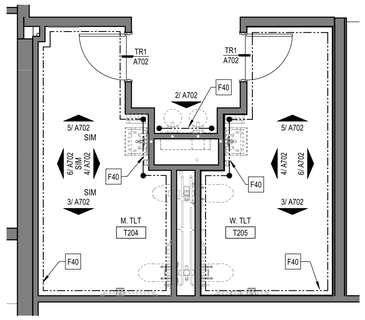

1 TYP. TILE LOCATIONS RESTROOOMS
A702 SCALE: 1/4" = 1'-0"
REF: A701

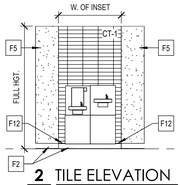

2 TILE ELEVATION
A702 SCALE: 1/4" = 1'-0"
REF: A701

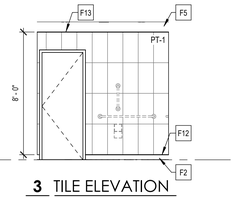

3 TILE ELEVATION
A702 SCALE: 1/4" = 1'-0"
REF: A702

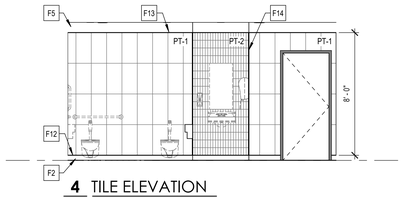

4 TILE ELEVATION
A702 SCALE: 1/4" = 1'-0"
REF: A702

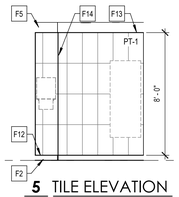

5 TILE ELEVATION
A702 SCALE: 1/4" = 1'-0"
REF: A702

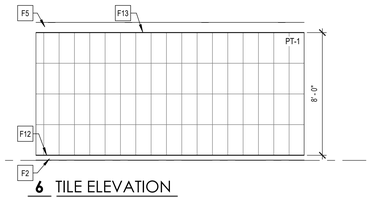

6 TILE ELEVATION
A702 SCALE: 1/4" = 1'-0"
REF: A702

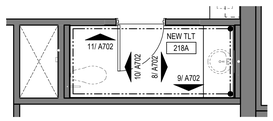

7 218A NEW TLT TILE LOCATIONS
A702 SCALE: 1/4" = 1'-0"
REF: A701

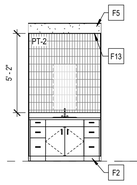

8 TILE ELEVATION
A702 SCALE: 1/4" = 1'-0"
REF: A702

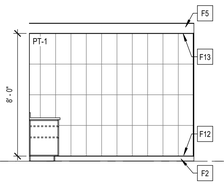

9 TILE ELEVATION
A702 SCALE: 1/4" = 1'-0"
REF: A702

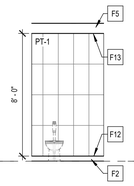

10 TILE ELEVATION
A702 SCALE: 1/4" = 1'-0"
REF: A702

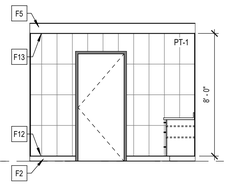

11 TILE ELEVATION
A702 SCALE: 1/4" = 1'-0"
REF: A702

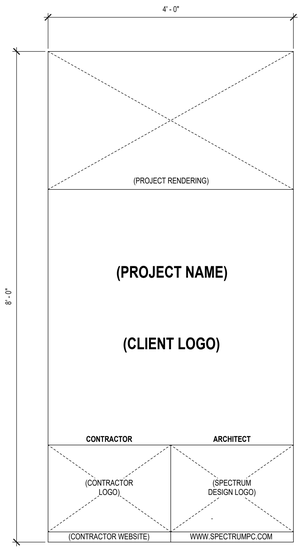

NOTES:
GN-1: ARCHITECT TO PROVIDE CONTRACTOR W/ COLOR DIGITAL GRAPHIC FOR PROJECT SIGN.

GN-2: ADHERE SIGN TO 3/4" PLYWOOD SHEET SUPPORTED BY (2) 4X4 P.T. WOOD POSTS. MECHANICALLY ATTACH PLYWOOD TO POSTS W/ WOOD SCREWS @16" O.C.

GN-3: CONSULT WITH A/E OF RECORD FOR SIGN LOCATION.

PROJECT SITE SIGN
SCALE: 1" = 1'-0"

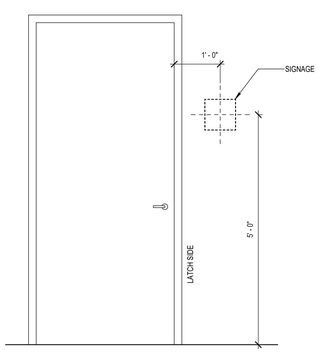

TYPICAL SIGNAGE LOCATION
SCALE: 3/4" = 1'-0"

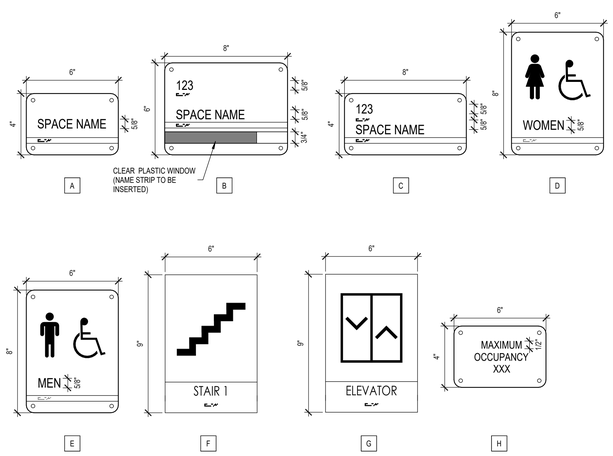

SIGNAGE TYPES
SCALE: 3" = 1'-0"

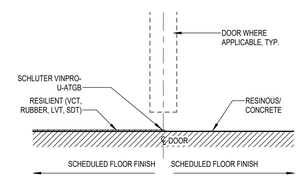

TR1 RESILIENT TO RESINOUS
A702 SCALE: 3" = 1'-0"

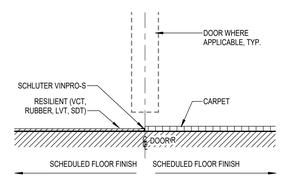

TR2 RESILIENT TO CARPET
A702 SCALE: 3" = 1'-0"

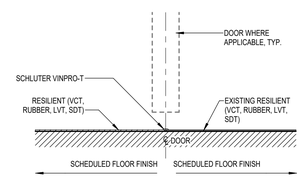

TR3 RESILIENT TO RESILIENT
A702 SCALE: 3" = 1'-0"

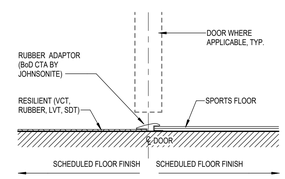

TR4 RESILIENT TO SPORTS FLOOR
A702 SCALE: 3" = 1'-0"

SIGNAGE SCHEDULE

OPENING NO./ DOOR MARK	SIGNAGE TYPE	ROOM NO.	VERBIAGE
LOWER FLOOR			
102	B		OFFICE
103	C		JANITOR
107	C		STORAGE
108	C		LACTATION
110A	C		OFFICE
110B	C		OFFICE
110C	B		OFFICE
120	C		BREAK ROOM
121A	C		MULTIPURPOSE ROOM
121A.	H		--
121B	C		STORAGE
121C	C		MULTIPURPOSE ROOM
121C.	H		--
122.1	A		EXIT
122.2	A		EXIT
123	B		OFFICE
124	B		OFFICE
125	B		OFFICE
126	B		OFFICE
127	B		OFFICE
128	B		OFFICE
129	B		OFFICE
130	C		STORAGE
131	C		STORAGE
C102	A		TBD
C103	A		EXIT
ELEV	G		ELEVATOR
M102	A		EXIT
M103	C		IT
S102.1	A		EXIT
S102.2	A		EXIT
S102.2.	F		STAIRS
T104	C		MENS
T105	C		WOMENS

SIGNAGE SCHEDULE

OPENING NO./ DOOR MARK	SIGNAGE TYPE	ROOM NO.	VERBIAGE
UPPER FLOOR			
210	B		OFFICE
212	B		OFFICE
213	B		OFFICE
214	B		OFFICE
215	B		OFFICE
216	B		OFFICE
217	B		OFFICE
218A	C		TOILET
220	C		STORAGE
230	C		OFFICE
231	C		CONFERENCE
233	C		STORAGE
234	B		OFFICE
235	C		OFFICE
236	B		OFFICE
237	B		OFFICE
238	B		OFFICE
241	B		OFFICE
242	C		RECEPTION
243	B		OFFICE
244	C		CONFERENCE
245	C		INTERVIEW
246	C		INTERVIEW
247	C		OBSERVATION
248	C		FINGERPRINT
C204	A		TBD
C205	A		TBD
C206	A		TBD
ELEV.	G		ELEVATOR
S202	A		EXIT
S202.	F		STAIRS
T204	C		MENS
T205	C		WOMENS
T206	C		PUBLIC TOILET
V201			
V202.2	A		EXIT

VERTICAL CIRCULATION GENERAL NOTES

GN-1: FINISH GRADES, FOOTINGS, AND FOUNDATIONS ARE SHOWN FOR ILLUSTRATION ONLY - SEE CIVIL AND STRUCTURAL DRAWINGS.

GN-2: SEE STRUCTURAL DRAWINGS FOR MASONRY REINFORCING, GROUTING, AND BOND BEAMS

GN-3: PROVIDE COLD FORMED METAL FRAMING KICKERS AS REQUIRED.

GN-4: SEE ASSEMBLIES SHEET FOR INTERIOR WALL AND PARTITION TYPES, EXTERIOR WALLS, AND ROOF TYPES.

XX SHEET KEYNOTES

F2 WALL BASE AS SCHEDULED
F5 WALL FINISH - PAINT
F12 TERMINATE WALL TILE 4" ABOVE FINISHED FLOOR WITH SATIN ANODIZED ALUMINUM EDGE PROTECTION PROFILE.
F13 TERMINATE WALL TILE, AT HEIGHT INDICATED, WITH SATIN ANODIZED ALUMINUM EDGE PROTECTION PROFILE.
F14 PROVIDE A SATIN ANODIZED ALUMINUM EDGE PROTECTION PROFILE AT ALL OUTSIDE CORNERS. TYP.
F40 WALL TILE EXTENTS, SEE ELEVATIONS

SPECTRUM DESIGN
architects | engineers

Plaza Suite 1
10 Church Avenue, SE
Roanoke, VA 24011

540.342.6001
spectrumpc.com

BEDFORD COUNTY SHERIFF'S OFFICE EXPANSION

SPECTRUM DESIGN PROJECT NO.: **24112**

COMMONWEALTH OF VIRGINIA
TRAVIS ROOKSTOOL
Lic. No. 17288
05.04.2026
ARCHITECT

PROJ. MGR.: **JM**
CHECKED BY: **GEG**
DRAWN BY: **TLR, MIG**

SHEET ISSUE DATE:
05.04.2026

PROJECT PHASE:
BID DOCUMENTS

SHEET REVISIONS:

PLAN NORTH
SITE NORTH

SHEET NAME:
TILE ELEVATIONS, FLOOR TRANSITIONS, & SIGNAGE

SHEET NUMBER:
A702

0 0.3' 0.5' 1'
SCALE: 3" = 1' - 0"

0 2' 4' 8'
SCALE: 1/4" = 1' - 0"

ORIGINAL SIZE: ARCH E1 (30X42) | 5/5/2026 3:00:46 AM
C:\Users\rookstool\SPECTRUM\OneDrive - Spectrum Design PC\Documents\24112 Arch Sheet\R24_Contrib_bookshelf\spec\Tumbuy-c.ctb

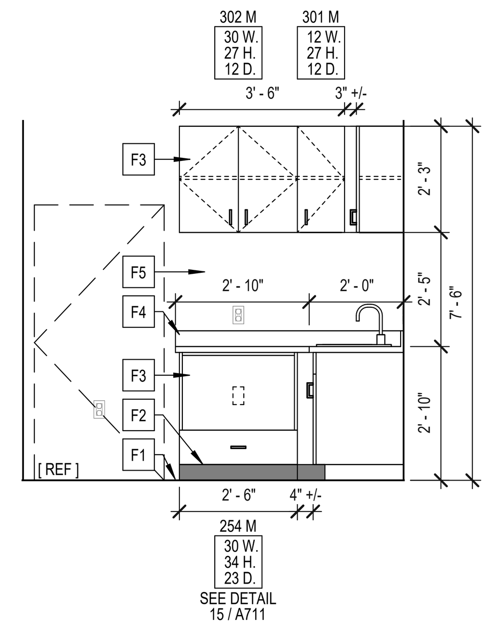

1 111 ECC BREAK ROOM
A711 SCALE: 3/8" = 1'-0"
REF: A701

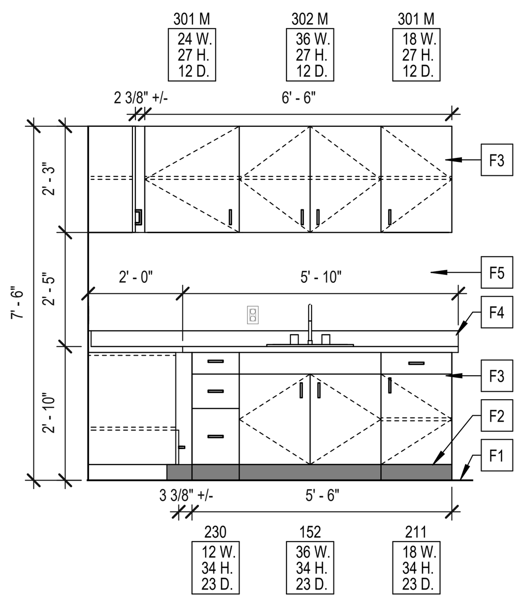

2 111 ECC BREAK ROOM
A711 SCALE: 3/8" = 1'-0"
REF: A701

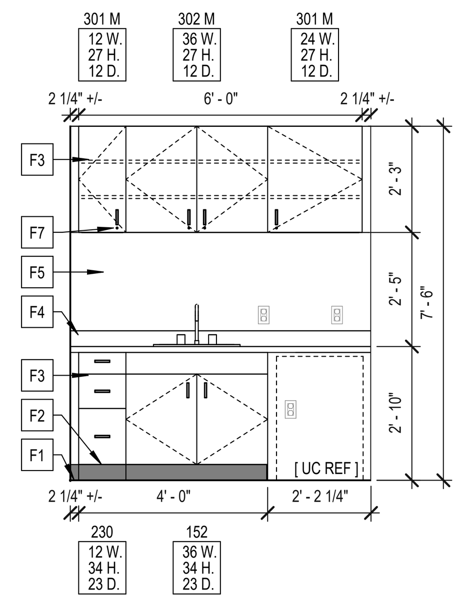

3 108 LACTATION
A711 SCALE: 3/8" = 1'-0"
REF: A701

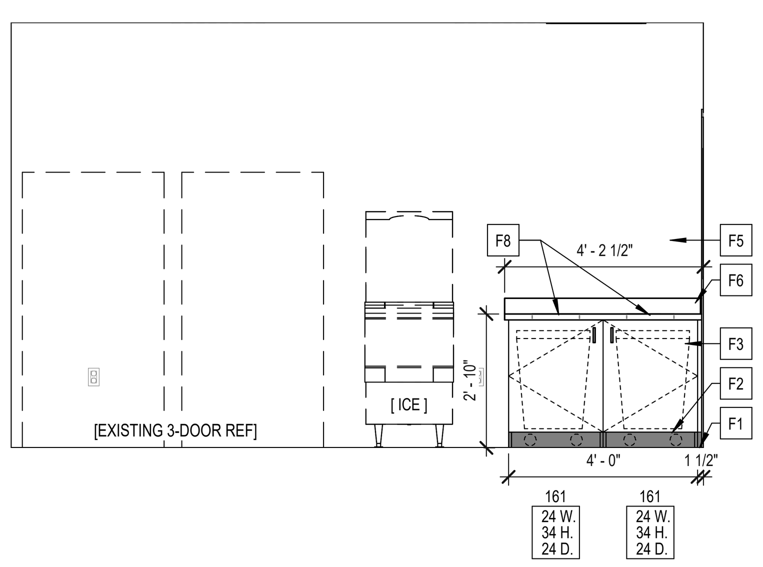

4 120 BREAK/ KITCHEN
A711 SCALE: 3/8" = 1'-0"
REF: A701

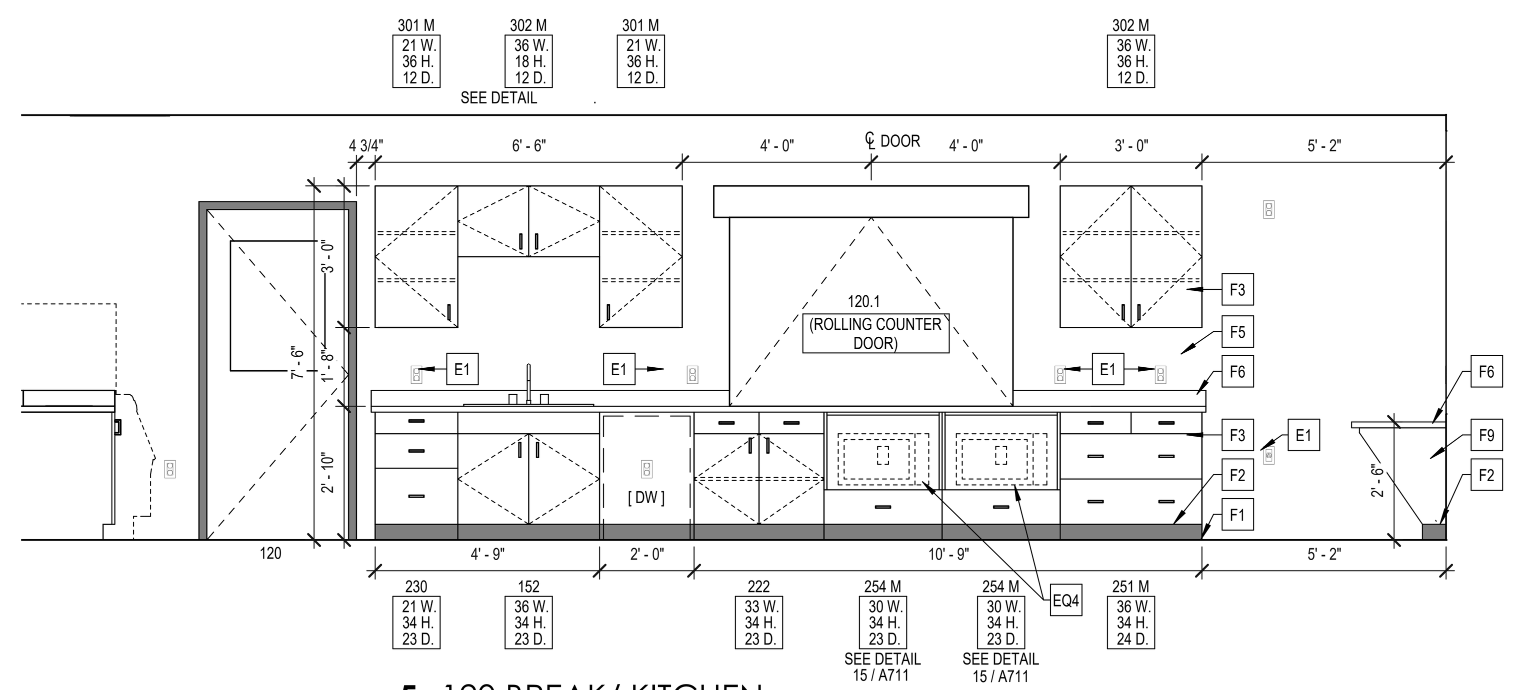

5 120 BREAK/ KITCHEN
A711 SCALE: 3/8" = 1'-0"
REF: A701

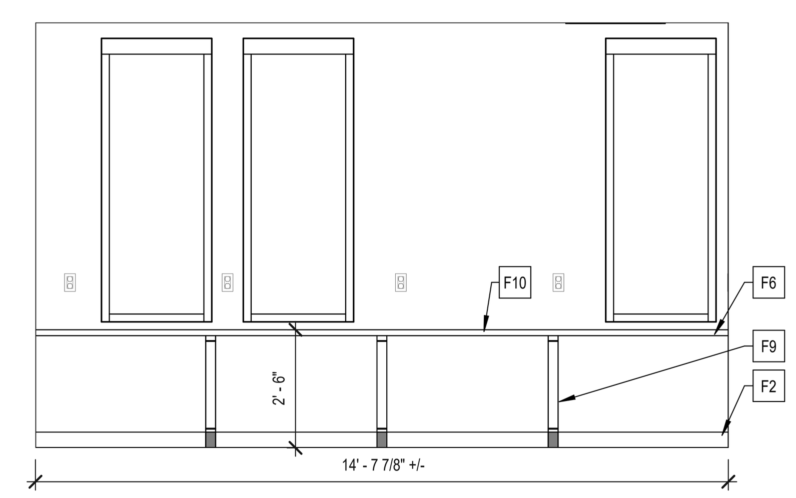

6 120 BREAK/ KITCHEN
A711 SCALE: 3/8" = 1'-0"
REF: A701

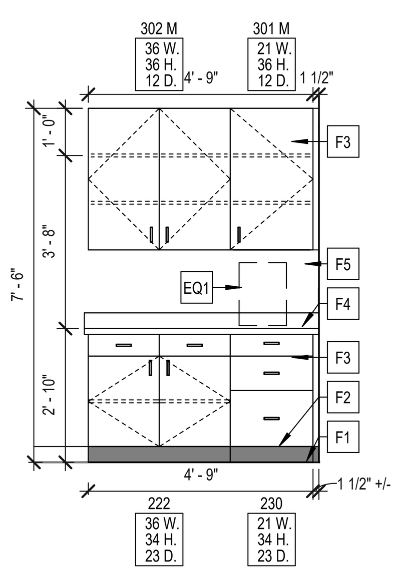

7 218 OFFICE
A711 SCALE: 3/8" = 1'-0"
REF: A701

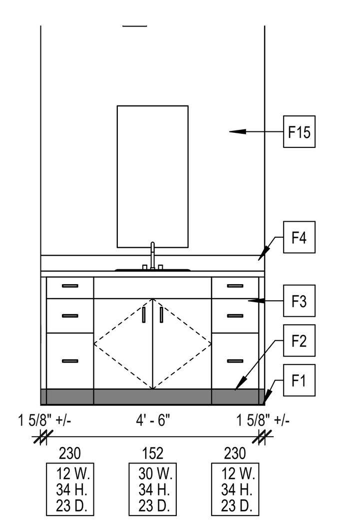

8 218A NEW TLT
A711 SCALE: 3/8" = 1'-0"
REF: A701

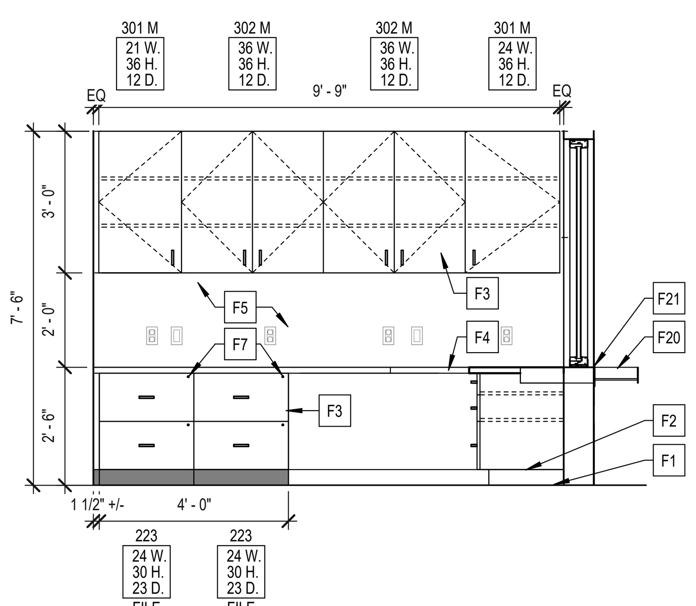

9 242 RECEPTION
A711 SCALE: 3/8" = 1'-0"
REF: A701

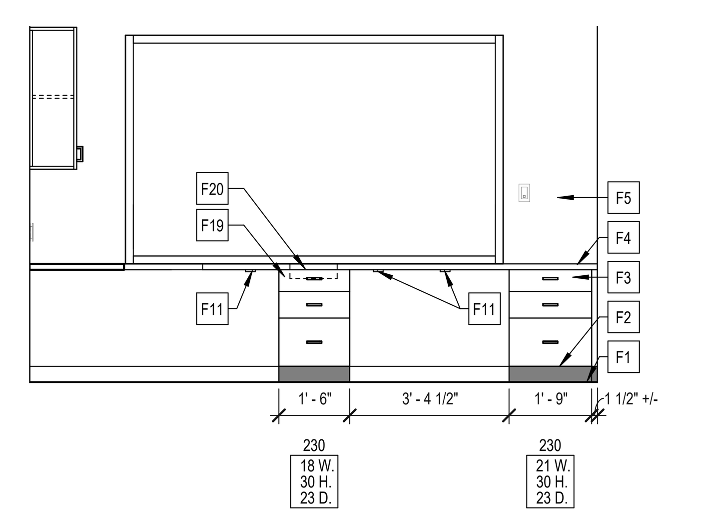

10 242 RECEPTION
A711 SCALE: 3/8" = 1'-0"
REF: A401

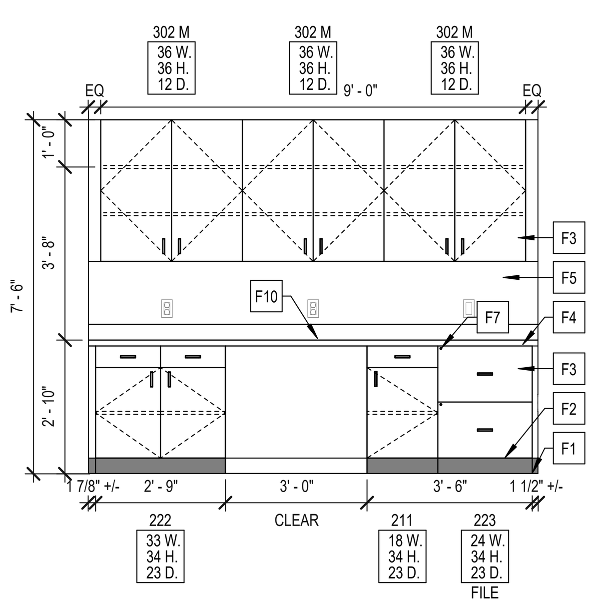

11 248 FINGERPRINT
A711 SCALE: 3/8" = 1'-0"
REF: A701

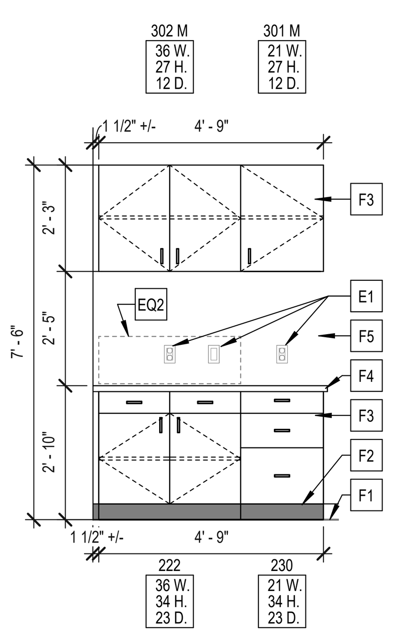

12 C202 CORR.
A711 SCALE: 3/8" = 1'-0"
REF: A701

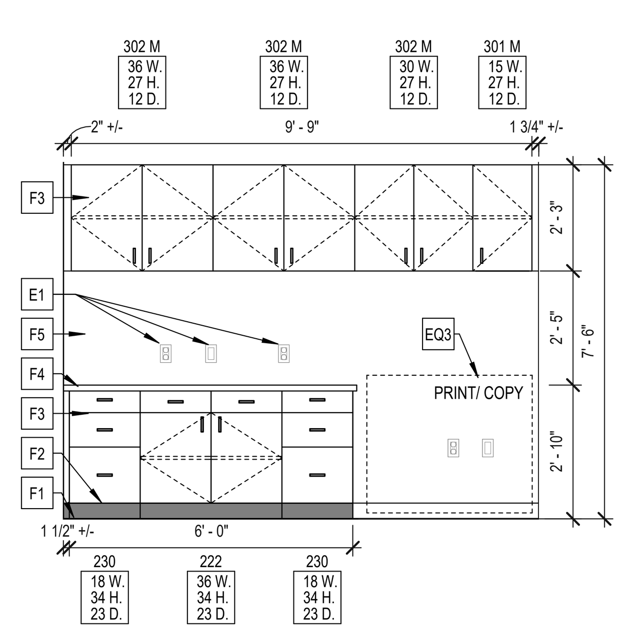

13 C202 CORRIDOR
A711 SCALE: 3/8" = 1'-0"
REF: A701

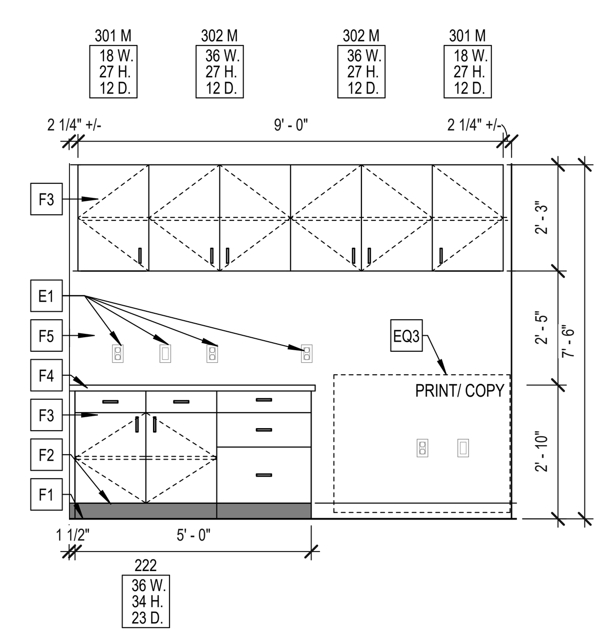

14 C205 CORRIDOR
A711 SCALE: 3/8" = 1'-0"
REF: A701

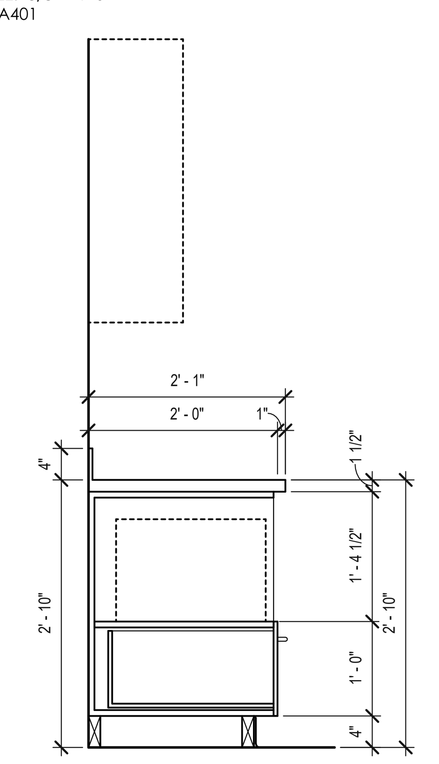

15 CASEWORK DETAIL
A711 SCALE: 3/4" = 1'-0"

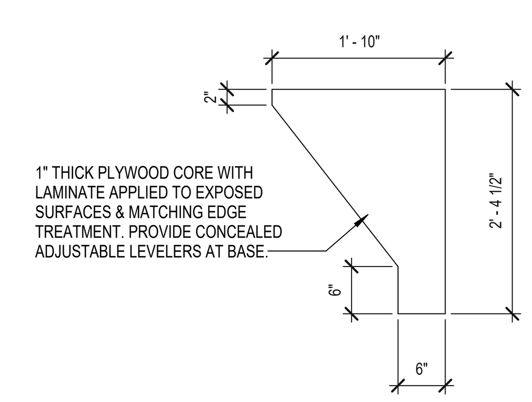

16 COUNTERTOP SUPPORT BRACKET
A711 SCALE: 3/4" = 1'-0"

CASEWORK GENERAL NOTES

GN-1: CASEWORK NUMBERING SYSTEM BASIS: NAAWS CABINET DESIGN SERIES

CASEWORK TAG

NAAWS CABINET DESIGN SERIES NUMBER — 000 M*

* "M" = MODIFIED

** "V" = VARIES, MATCH WIDTH OF ADJ. CASEWORK BELOW

00 W. — CASEWORK WIDTH **

00 H. — NOMINAL CASEWORK HEIGHT (TOP FACE OF COUNTERTOP IF BASE CABINET)

00 D. — NOMINAL CASEWORK DEPTH (REAR OF CABINET TO OUTSIDE FACE OF CABINET DOOR)

X/AXXX — MODIFICATION DETAIL OR DESCRIPTION

NOTE: COUNTERTOP MAX DEPTH = 24" FROM FACE OF WALL TO OUTSIDE EDGE OF COUNTERTOP

GN-2: SHELVING TYPES - SEE CASEWORK ELEVATIONS FOR LOCATIONS AND QUANTITY.

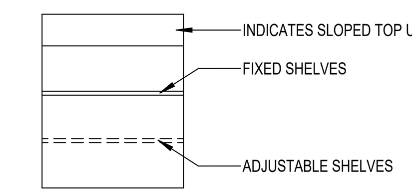

GN-3: GC TO COORDINATE INSTALLATION OF BLOCKING IN WALLS AS REQUIRED TO SUPPORT ALL CASEWORK; TYP.

GN-4: FIELD VERIFY ALL DIMENSIONS AND CONDITIONS PRIOR TO SUBMITTING SHOP DRAWINGS TO ARCHITECT FOR REVIEW.

GN-5: ALL EXPOSED SURFACES SHALL BE PLASTIC LAMINATE UNLESS NOTED OTHERWISE; COORDINATE WITH SPECIFICATIONS.

GN-6: CONTINUE FLOORING AND WALL BASE INSIDE OPEN CABINETS AND OPENINGS BETWEEN CABINETS.

GN-7: CONTINUE WALL BASE ON FACE OF TOE KICK AND FACE OF END PANELS UNLESS NOTED OTHERWISE.

GN-8: PLAM SHELVES AT MICROWAVE LOCATIONS SHALL BE 1'-6" DEEP AND SHALL EXTEND PAST THE FACE OF THE ADJACENT WALL CABINET. PROVIDE 1-1/2" RADIUSED CORNERS ON MICROWAVE SHELF EXTENSIONS; TYP.

GN-9: ALLOW FOR (4) PLASTIC LAMINATE COLORS ON THIS JOB.

XX SHEET KEYNOTES

E1	ELECTRICAL EQUIPMENT - SEE ELECTICAL DRAWINGS
EQ1	"KEURIG" STYLE COFFEE MAKER - BY OWNER
EQ2	COUNTERTOP PRINTER - BY OWNER
EQ3	FLOOR PRINTER - BY OWNER
EQ4	MICROWAVE - BY OWNER
F1	FLOOR FINISH AS SCHEDULED
F2	WALL BASE AS SCHEDULED
F3	PLASTIC LAMINATE FACED CASEWORK; SEE SPECS
F4	COUNTERTOP & BACKSPLASH - SOLID SURFACE. SEE FINISH LEGEND & SPECS
F5	WALL FINISH - PAINT
F6	COUNTERTOP & BACKSPLASH - QUARTZ. SEE FINISH LEGEND & SPECS
F7	PROVIDE LOCK ON CASEWORK DOORS/ DRAWERS
F8	12-INCH DIA. OPENING IN COUNTERTOP CENTERED IN BASE CABINET BELOW FOR TRASH PASS-THROUGH
F9	PROVIDE COUNTERTOP SUPPORT AS DETAILED. REFER TO DETAIL FOR CONFIGURATION & ATTACHEMENT REQUIREMENTS. COORD. BLOCKING & STRUCTURAL SUPPORT AS REQUIRED
F10	PROVIDE PASS-THROUGH GROMMETS AS REQUIRED. COORD. LOCATION OF PASS-THROUGH GROMMETS WITH OWNER.
F11	FLAT HIDDEN COUNTERTOP BRACKET AT EACH STUD. COORD. BLOCKING & STRUCTURAL SUPPORT AS REQUIRED
F15	SEE FINISH ELEVATONS FOR WALL TILE
F19	PROVIDE FALSE DRAWER FRONT TO CONCEAL TRANSACTION DRAWER. FABRIC TO MATCH ADJACENT CASEWORK.
F20	PROVIDE RECESSED TRANSACTION DRAWER, BASIS OF DESIGN: READY ACCESS SMALL TRANSACTION DRAWER (RA-SMTD12X17X4). COORDINATE INSTALLATION WITH WALL THICKNESS AND ADJACENT CASEWORK AND COUNTERTOP FOR FLUSH & SECURE FIT WHILE MAINTAINING CLEARANCES FOR DRAWER OPERATION.
F21	COORDINATE REQUIRED ROUGH OPENING (APPROX. 12 1/4" X 4") AND FACEPLATE DIMENSIONS WITH WALL CONSTRUCTION, WINDOW, AND ADJACENT CASEWORK.

0 1' 2' 4'
SCALE: 3/4" = 1' - 0"

0 2' 4' 8'
SCALE: 3/8" = 1' - 0"

SPECTRUM DESIGN
architects | engineers

Plaza Suite 1
10 Church Avenue, SE
Roanoke, VA 24011

540.342.6001
spectrumpc.com

BEDFORD COUNTY SHERIFF'S OFFICE EXPANSION

SPECTRUM DESIGN PROJECT NO.: **24112**

COMMONWEALTH OF VIRGINIA
TRAVIS ROOKSTOOL
Lic. No. 17288
05.04.2026
ARCHITECT

PROJ. MGR.: **JM** CHECKED BY: **GEG** DRAWN BY: **TLR, MIG**

SHEET ISSUE DATE:
05.04.2026

PROJECT PHASE:
BID DOCUMENTS

SHEET REVISIONS:

PLAN NORTH SITE NORTH

SHEET NAME:
CASEWORK ELEVATIONS & DETAILS

SHEET NUMBER:
A711

ORIGINAL SIZE : ARCH E1 (30X42) | 5/5/2026 3:00:55 AM
C:\Users\trookstool.SPECTRUM\OneDrive - Spectrum Design PC\Documents\24112 Arch Sheriff R26 Central_trookstool@spectrumpc.com.rvt

FIXTURE CONNECTION SCHEDULE

MARK	FIXTURE	WASTE	VENT	COLD	HOT	MANUFACTURER	MODEL	CATALOG NO.	REMARKS	MTG HGT
WC-1	WATER CLOSET (FLUSH VALVE)	4"	2"	1"	-	SLOAN	ROYAL OPTIMA WETS	2050.1301-1.28-ES-S	WALL MOUNTED, TOP SPUD, ELONGATED FRONT, 1.28 GPF. PROVIDE AMERICAN STANDARD CARDIFF WHITE SOLID PLASTIC CLOSED FRONT SEAT WITH COVER, SLOAN ROYAL OPTIMA 111 ESS SENSOR FLUSH VALVE, EL-485A ELECTRICAL BOX AND SUPPORT KIT AND CLOSET CARRIER SIMILAR TO JOSAM 12000 SERIES "CHASE SAVER".	14" TO RIM
WC-2	WATER CLOSET (FLUSH VALVE)	4"	2"	1"	-	SLOAN	ROYAL OPTIMA WETS	2050.1301-1.28-ES-S	WALL MOUNTED, HANDICAPPED#, ELONGATED FRONT, 1.28 GPF. PROVIDE AMERICAN STANDARD CARDIFF WHITE SOLID PLASTIC CLOSED FRONT SEAT WITH COVER, SLOAN OPTIMA 111 ESS SENSOR FLUSH VALVE, EL-485A ELECTRICAL BOX AND SUPPORT KIT AND CLOSET CARRIER SIMILAR TO JOSAM 12000 SERIES "CHASE SAVER".	17" TO RIM
UR-1	URINAL	2"	1 1/2"	1 1/4"	-	SLOAN	ROYAL OPTIMA WEUS	WEUS-1000.1301-0.13 ES-S	WALL MOUNTED, HANDICAPPED#, 0.13 GPF WATER SAVING. PROVIDE SLOAN ROYAL 186 ES-S SENSOR FLUSH VALVE AND URINAL CARRIER SIMILAR TO JOSAM SERIES 17560-UR.	17" TO RIM
L-1	LAVATORY	1 1/4"	1 1/2"	1/2"	1/2"	AMERICAN STANDARD	LUCERNE	0355.012	WALL MOUNTED, HANDICAPPED#, VITREOUS CHINA. PROVIDE SLOAN OPTIMA EBF-650-BDM SENSOR FAUCET, 0.50 GPM, AND CONCEALED ARMS CARRIER SIMILAR TO JOSAM 17100 SINGLE.	34" TO RIM
EWC-1	ELECTRIC WATER COOLER	1 1/4"	1 1/2"	1/2"	-	ELKAY	---	EZWS-ERPBBM28K	WALL MOUNTED, HANDICAPPED#, BOTTLE-FILLER, VANDAL-RESISTANT FLEXIBLE GUARD BUBBLERS. PROVIDE WALL MOUNTING FRAME MF200 WITH STAINLESS STEEL BOLTS AND SCREWS, CHILLER SHELF AND SUPPORT RODS.	36" TO LOWER SPOUT OUTLET
SK-1	SINK (SINGLE COMPARTMENT)	1 1/2"	1 1/2"	1/2"	1/2"	ELKAY	LUSTERTONE	LRAD 2219	HANDICAPPED#, CHICAGO 1100-GN8AE35-369AB FAUCET.	COUNTER TOP
SK-2	SINK (DOUBLE COMPARTMENT)	1 1/2"	1 1/2"	1/2"	1/2"	ELKAY	LUSTERTONE	LRAD 3322	HANDICAPPED#, CHICAGO 110-GN8AE35-369AB FAUCET.	COUNTER TOP

INSTALLATION SHALL MEET 2010 AMERICANS WITH DISABILITIES ACT (ADA) ACCESSIBILITY GUIDELINES FOR BUILDINGS AND FACILITIES.

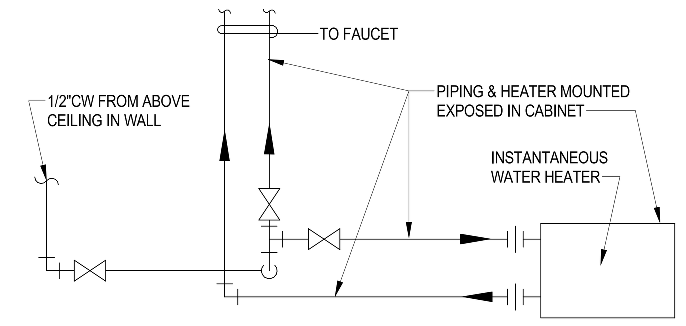

WATER SUPPLY BELOW COUNTERTOP UNDER SK DETAIL
NO SCALE

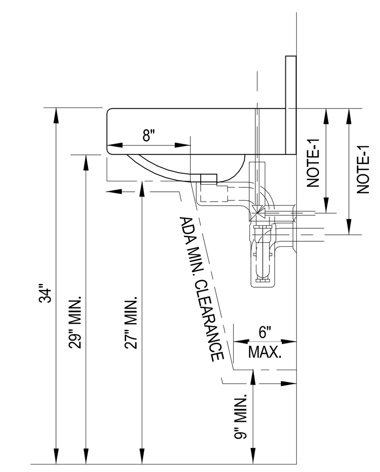

NOTE-1: AS REQUIRED TO MAINTAIN ADA CLEARANCE

HANDICAPPED LAVATORY INSTALLATION ADA REQUIREMENTS WALL MOUNTED
NO SCALE

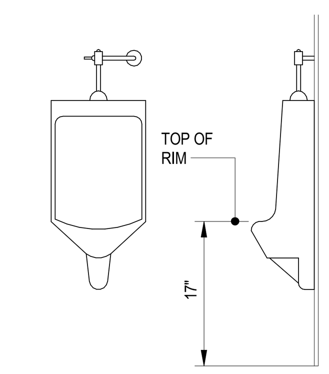

HANDICAPP URINAL INSTALLATION ADA REQUIREMENTS WALL MOUNTED
NO SCALE

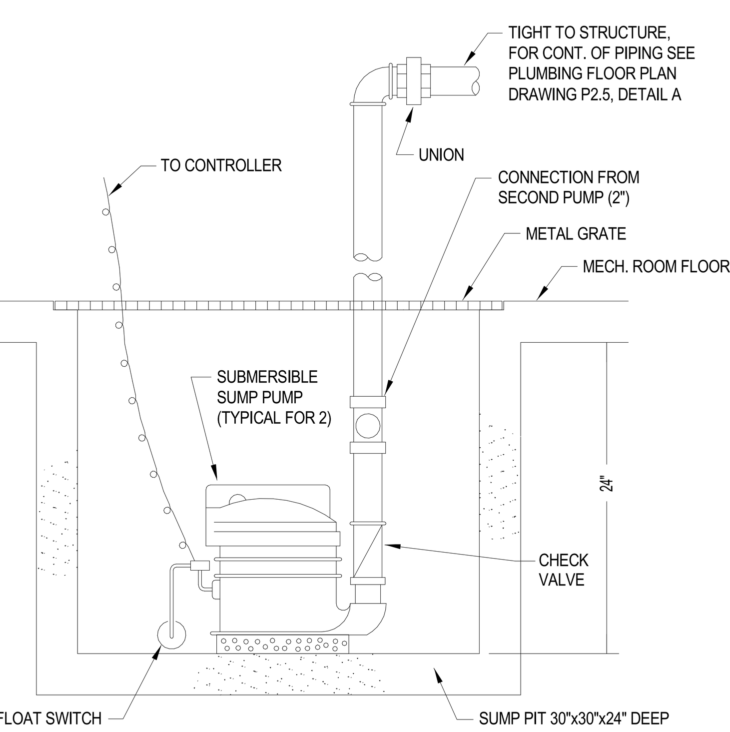

SUMP PUMP DETAIL
NO SCALE

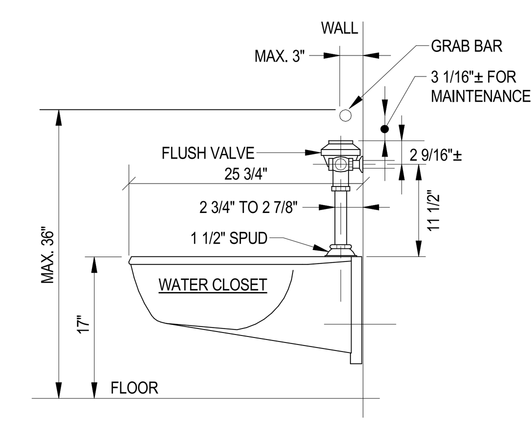

HANDICAPPED WC ROUGH-IN DETAIL
NO SCALE

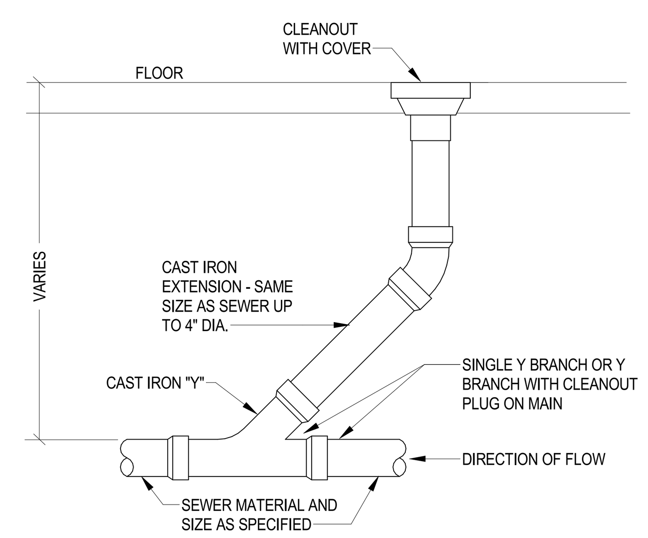

CLEANOUT DETAIL
NO SCALE

PLUMBING LEGEND

ABOVE	ABV
BACK FLOW PREVENTER	BFP
BELOW	BEL
CLEANOUT IN VERTICAL OR FLUSH WITH FLOOR	CO
DIRECTION OF FLOW	
DIRECTION OF SLOPE DOWN	
DOMESTIC COLD WATER PIPE, NEW	CW
DOMESTIC HOT WATER PIPE, NEW	HW
DOWN	DN
ELECTRIC WATER COOLER	EWC
EXISTING	EX
FLOOR	FL
FLOOR DRAIN	FD
FROM	FR
GATE VALVE	GV
BALL VALVE	
GATE VALVE (IN VERTICAL)	
INLET WITH P-TRAP	
LAVATORY	L
PIPING INDICATION WITH RESPECT TO WATER FLOW	
BOTTOM TAKEOFF	
SIDE CONNECTION	
CONNECTION (BOTTOM,TEE OR TOP)	
TOP TAKEOFF	
TURN DOWN OR FROM BELOW	
TURN UP OR DOWN	
TURN UP OR FROM ABOVE	
PUMPED WASTE	PW
SANITARY WASTE PIPE, NEW	SW
SHOCK ABSORBER	SA
SINK	SK
SPRINKLER PIPE	SPR
URINAL	UR
VENT PIPE, NEW	V
VENT THRU ROOF	VTR
WALL HYDRANT	WH
WASTE PIPE	W
WATER CLOSET	WC
WATER HEATER	WHR

SPRINKLER SYSTEM GENERAL NOTES

1. THE ENTIRE ADDITION SHALL BE FULLY SPRINKLERED WITH A HYDRAULICALLY CALCULATED WET SPRINKLER SYSTEM. THE ELEVATOR AND ELEVATOR MACHINE ROOM SHALL BE PROTECTED BY 200 DEG. F. SPRINKLERS. SYSTEM SHALL EXTEND FROM AND CONNECT TO THE EXISTING SPRINKLER SERVICE IN THE EXISTING MECHANICAL ROOM. ALL SYSTEMS SHALL COMPLY WITH NFPA 13-2019 AND THE 2021 VIRGINIA CONSTRUCTION CODE. REFER TO SPECIFICATION SECTION 211000 FOR DETAILED SPRINKLER SYSTEM REUIREMENTS.
2. CONTRACTOR SHALL COORDINATE THE LOCATIONS OF ALL SPRINKLERS AND SPRINKLER PIPING WITH OTHER NEW AND EXISTING PIPES, DUCTS, LIGHTS, EQUIPMENT, CONDUIT, STRUCTURAL SYSTEMS, CEILING SUPPORTS, AND FRAMING BEFORE INSTALLATION. SPRINKLER PIPING SHALL NOT BE INSTALLED WHERE ITS LOCATION INHIBITS EQUIPMENT FILTER AND MAINTENANCE ACCESS OR INFRINGES UPON CLEARANCE DICTATED BY THE NATIONAL ELECTRIC CODE. ALL SPRINKLERS TO BE CENTERED IN CEILING TILES - "CENTER OF TILE".
3. PROVIDE U.L. APPROVED FIRESTOPPING AT ALL LOCATIONS WHERE PIPES PENETRATE RATED WALL AND RATED FLOOR/CEILING ASSEMBLIES IN ACCORDANCE WITH SPECIFICATION SECTION 22 00 00, PARAGRAPH 2.04A AND VBC SECTION 712.
4. CAREFULLY COORDINATE LOCATIONS OF SPRINKLERS WITH SURFACE MOUNTED LIGHT FIXTURES. MAINTAIN OBSTRUCTION DISTANCES AND SPACING IN ACCORDANCE WITH THE MANUFACTURERS LISTINGS AND NFPA REQUIREMENTS. SIDEWALL SPRINKLERS SHALL BE INSTALLED WITH DEFLECTORS MINIMUM 5 INCHES BELOW CEILINGS, BUT NO HIGHER THAN THE BOTTOM OF LIGHT FIXTURES.
5. WATER SUPPLY INFORMATION PROVIDED BY TOWN OF BEDFORD WATER DEPARTMENT BASED ON A FLOW TEST DATED MARCH 14, 2025. CONTRACTOR SHALL PERFORM ADDITIONAL FLOW TESTS AS REQUIRED TO VERIFY DATA FOR USE IN DESIGN CALCULATIONS.

   STATIC PRESSURE: 94 PSI

   RESIDUAL PRESSURE: 24 PSI

   FLOW: 817 GPM

   SEE SITE PLAN FOR LOCATIONS OF TEST HYDRANTS.

PLUMBING GENERAL NOTES:

1. SEE SITE PLAN SHEET FOR THE EXTENT OF ALL PIPING LEAVING AND ENTERING BUILDING.
2. MAKE PIPING CONNECTIONS AS REQUIRED TO ALL FIXTURES AND EQUIPMENT EVEN THOUGH ALL BRANCH MAINS, ELBOWS AND CONNECTIONS ARE NOT SHOWN.
3. CHECK WITH ARCHITECTURAL WORKING DRAWINGS BEFORE ROUGHING-IN PLUMBING FIXTURES.
4. SLOPES AND INVERT ELEVATIONS OF SEWERS, MANHOLES, ETC., SHALL BE ESTABLISHED AND VERIFIED BY CONTRACTOR BEFORE ANY PIPING IS INSTALLED IN ORDER THAT PROPER SLOPES ILL BE MAINTAINED AND NECESSARY INVERT ELEVATIONS OBTAINED.
5. ALL PIPES SHALL BE COORDINATED WITH OTHER NEW AND EXISTING DUCTS, PIPES, LIGHTS, TRUCTURAL SYSTEM, CEILING SUPPORTS AND FRAMING BEFORE INSTALLATION. MINOR PIPE FFSETS SHALL BE PROVIDED AS REQUIRED. MEASUREMENTS FOR VERTICAL CLEARANCES SHALL E TAKEN AT THE JOB SITE BEFORE INSTALLATION OF ANY PIPING.
6. WASTE PIPE BELOW FLOOR, VENT PIPING ABOVE CEILING, PIPING OFFSET FOR CLARITY.
7. DOMESTIC WATER PIPING SHALL BE INSTALLED ABOVE CEILINGS UNLESS NOTED OTHERWISE. OMESTIC WATER PIPING SHOWN IN PIPE CHASE WALLS SHALL BE INSTALLED IN CHASE SPACE, IPING OFFSET FOR CLARITY.
8. DOMESTIC WATER PIPING SHALL NOT BE INSTALLED IN LOCATIONS SUBJECT TO FREEZING OR SPACES EXTERIOR TO BUILDING INSULATION.
9. ALL EQUIPMENT SHALL BE INSTALLED IN ACCORDANCE WITH MANUFACTURER'S PUBLISHED INSTRUCTIONS.
10. MATERIALS AND INSTALLATION SHALL COMPLY WITH LOCAL CODES. APPLICABLE PROVISIONS OF ATEST EDITION OF NATIONAL FIRE PROTECTION ASSOCIATION, LOCAL UTILITY REGULATIONS AND GVERNMENTAL DEPARTMENTS HAVING JURISDICTION.
11. WHERE PIPE CONNECTIONS ARE SHOWN CONNECTING TO EXISTING, CONTRACTOR SHALL DETERMINE EXACT LOCATIONS AND CONNECTION SIZES PRIOR TO INSTALLATION.
12. LIMITS OF CONTRACT: DOMESTIC WATER SERVICE, SANITARY AND STORM WATER PIPING SHALL E EXTENDED UNDER THIS SECTION OF THE SPECIFICATIONS TO POINTS 5'-0" BEYOND THE UILDING LINES, UNLESS OTHERWISE INDICATED ON THE DRAWINGS, WHERE THE PIPES SHALL BE CAPPED OR PLUGGED AND LEFT READY FOR CONNECTION AND EXTENSION BY OTHERS, AND THE OCATIONS MARKED WITH A STAKE OR OTHER APPROVED MEANS.
13. MODIFY FLUSH VALVE ON INDICATED HANDICAPPED WATER CLOSETS SO THAT OPERATOR IS ON RIGHT SIDE OF VALVE WHEN FACING THE PLUMBING FIXTURE. DOMESTIC COLD WATER SUPPLY RUNOUT SHALL BE LOCATED TO ACCOMMODATE THE MODIFICATION. SEE DRAWINGS FOR WATER CLOSETS TO BE MODIFIED.
14. RETURN AIR PLENUM NOTE: ALL MATERIALS LOCATED IN THE RETURN AIR PLENUMS SHALL MEET THE REQUIREMENTS OF THE INTERNATIONAL MECHANICAL CODE, SECTION 602.2.1.
15. PIPING SHALL NOT BE INSTALLED ABOVE ELECTRICAL PANELS. COORDINATE INSTALLATION OF PIPES WITH ELECTRICAL PANELS WHEN SHOWN NEAR PANELS OR OVER ELECTRICAL ROOMS.

PARTIAL FLOOR PLAN NUMBER OR LETTER

1 / P1 PARTIAL FLOOR PLAN

SCALE:

SHEET NUMBER WHERE PARTIAL FLOOR PLAN IS TAKEN

PLAN TITLE

PARTIAL FLOOR PLAN NUMBER OR LETTER

1 / P3

SHEET NUMBER WHERE PARTIAL FLOOR PLAN IS DRAWN

PLAN SYMBOL

PARTIAL FLOOR PLAN IDENTIFICATION

SPECTRUM DESIGN
architects | engineers

Plaza Suite 1
10 Church Avenue, SE
Roanoke, VA 24011

540.342.6001
spectrumpc.com

L P A
LAWRENCE PERRY & ASSOCIATES
Consulting Engineers
15 E Salem Avenue SE, Suite 101
Roanoke, Virginia 24011
Ph: (540) 342-1816
Fax: (540) 344-3410
Comm. No.: 25114

© Lawrence Perry and Associates, Inc.

RENOVATIONS & ADDITIONS TO

BEDFORD COUNTY SHERIFF'S OFFICE

SPECTRUM DESIGN PROJECT NO.: **24112**

COMMONWEALTH OF VIRGINIA
04/13/2026
RICHARD C. HUGHES
Lic. No. 045688
PROFESSIONAL ENGINEER

PROJ. MGR.:	CHECKED BY:	DRAWN BY:
RCH	MGW	CAD

SHEET ISSUE DATE:
04.13.2026

PROJECT PHASE:
CONSTRUCTION DOCUMENTS

SHEET REVISIONS:

PLAN NORTH — SITE NORTH

SHEET NAME:
PLUMBING LEGEND, DETAILS AND NOTES

SHEET NUMBER:
P001

ORIGINAL SIZE : ARCH E1 (30X42) | 5/4/2026 11:46:36 AM
C:\Users\cad\Documents\25114 - Bedford Sheriffs Office - PLUMB - R26_aderfler.rvt

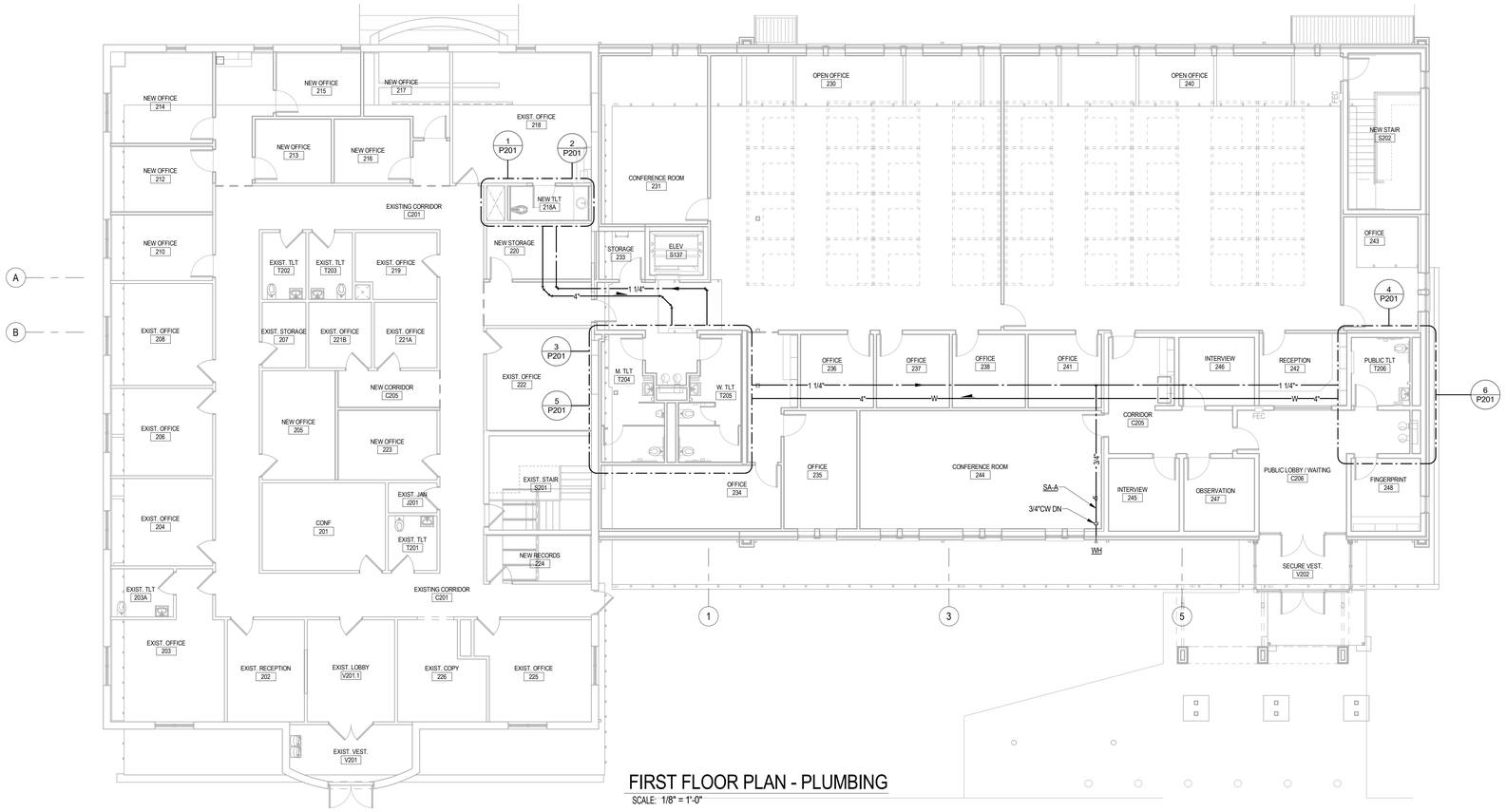

FIRST FLOOR PLAN - PLUMBING

SCALE: 1/8" = 1'-0"

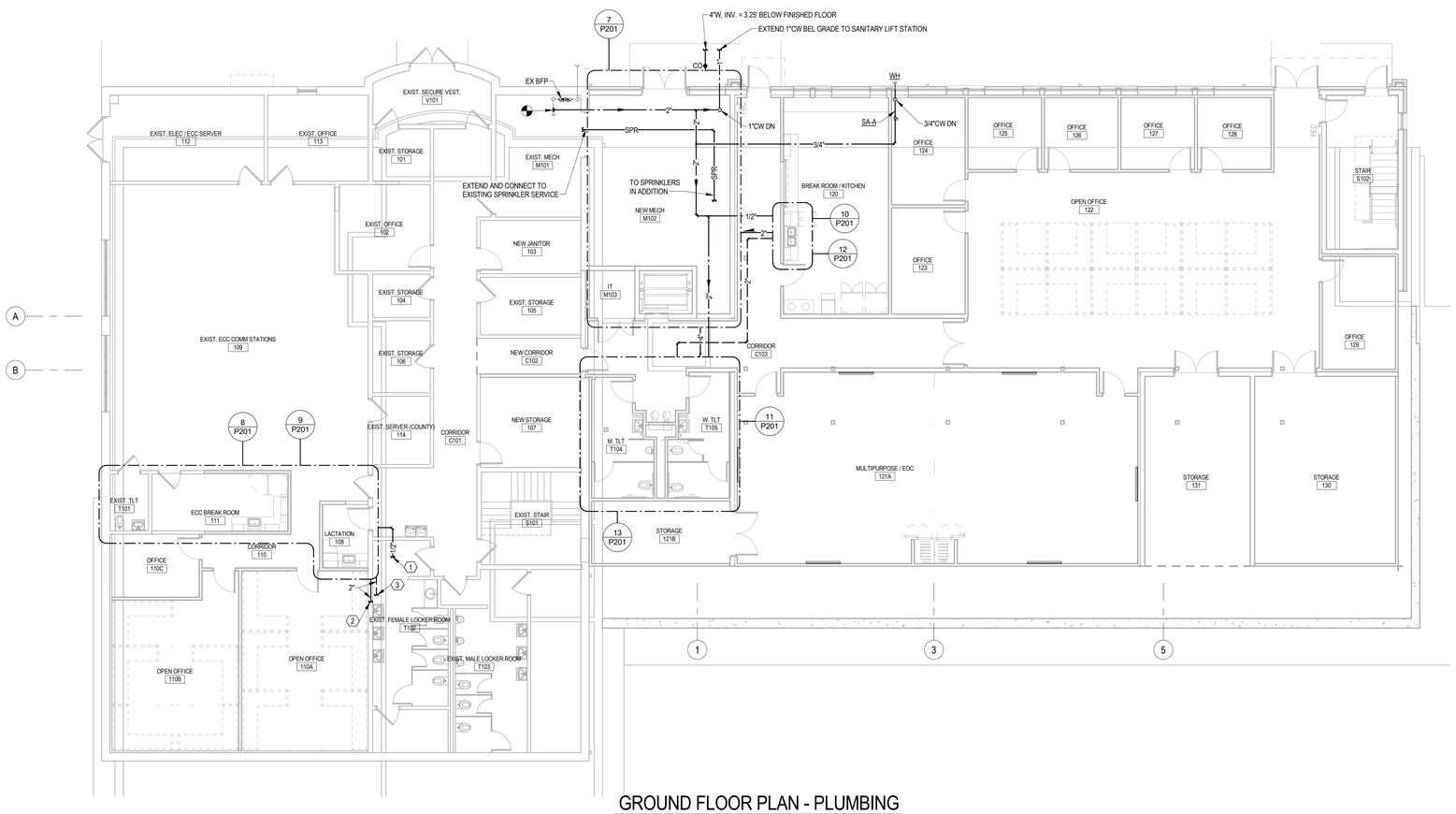

GROUND FLOOR PLAN - PLUMBING

SCALE: 1/8" = 1'-0"

PARTIAL PLAN PLUMBING NOTES:

1. CONNECT NEW COLD WATER LINES TO EXISTING HOT AND COLD WATER LINES.
2. CONNECT NEW SANITARY WASTE PIPING TO EXISTING SANITARY WASTE PIPING IN WALL BEHIND EXISTING LAVATORIES.
3. CONNECT NEW VENT PIPING TO EXISTIING VENT PIPING ABOVE CEILING FOR EXISTING LAVATORIES.

0 4' 8' 16'
SCALE: 1/8" = 1' - 0"

SPECTRUM DESIGN
architects | engineers

Plaza Suite 1
10 Church Avenue, SE
Roanoke, VA 24011

540.342.6001
spectrumpc.com

LPA
LAWRENCE PERRY & ASSOCIATES
Consulting Engineers

15 E Salem Avenue SE, Suite 101
Roanoke, Virginia 24011

Ph: (540) 342-1816
Fax: (540) 344-3410

Comm. No.: 25114

© Lawrence Perry and Associates, Inc.

RENOVATIONS & ADDITIONS TO

BEDFORD COUNTY SHERIFF'S OFFICE

SPECTRUM DESIGN PROJECT NO.: **24112**

COMMONWEALTH OF VIRGINIA
04/13/2026
RICHARD C. HUGHES
Lic. No. 045688
PROFESSIONAL ENGINEER

PROJ. MGR.: **RCH**
CHECKED BY: **MGW**
DRAWN BY: **CAD**

SHEET ISSUE DATE:
04.13.2026

PROJECT PHASE:
CONSTRUCTION DOCUMENTS

SHEET REVISIONS:

PLAN NORTH SITE NORTH

SHEET NAME:
FLOOR PLANS - PLUMBING

SHEET NUMBER:
P101

ORIGINAL SIZE: ARCH E1 (30X42) | 3/4/2026 11:44:37 AM
C:\Users\cad\Documents\24114 - Bedford Sheriff's Office - PlumMB - R25_sdenfield.rvt

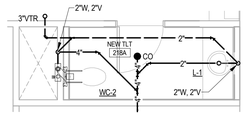

1 P101 PARTIAL PLAN - PLUMBING
SCALE: 1/4" = 1'-0"

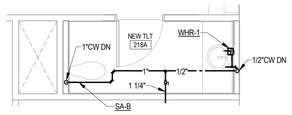

2 P101 PARTIAL PLAN - PLUMBING
SCALE: 1/4" = 1'-0"

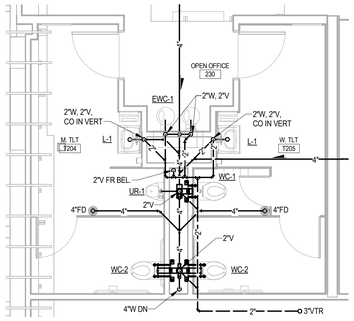

3 P101 PARTIAL PLAN - PLUMBING
SCALE: 1/4" = 1'-0"

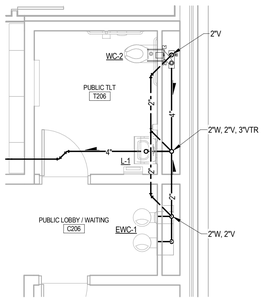

4 P101 PARTIAL PLAN - PLUMBING
SCALE: 1/4" = 1'-0"

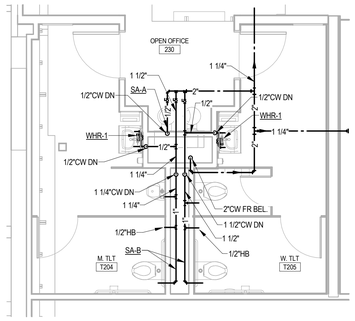

5 P101 PARTIAL PLAN - PLUMBING
SCALE: 1/4" = 1'-0"

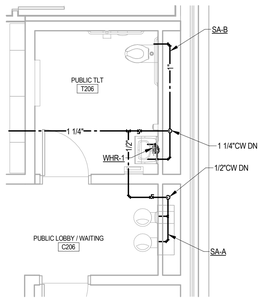

6 P101 PARTIAL PLAN - PLUMBING
SCALE: 1/4" = 1'-0"

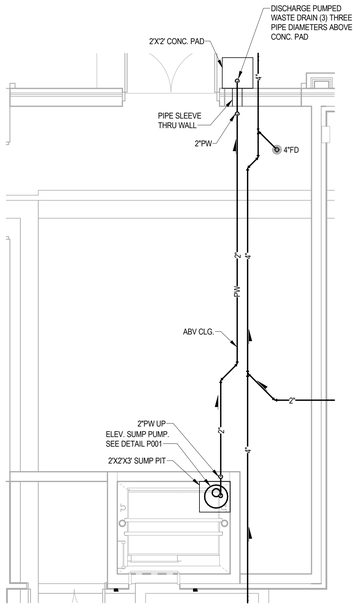

7 P101 PARTIAL PLAN - PLUMBING
SCALE: 1/4" = 1'-0"

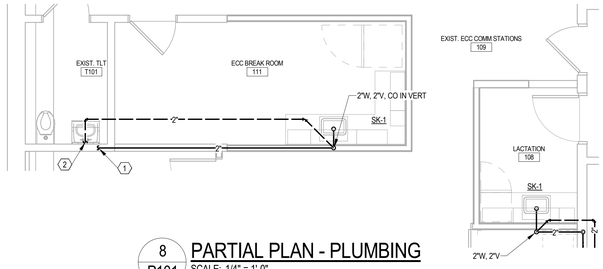

8 P101 PARTIAL PLAN - PLUMBING
SCALE: 1/4" = 1'-0"

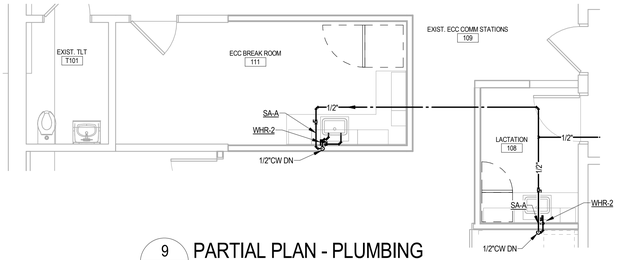

9 P101 PARTIAL PLAN - PLUMBING
SCALE: 1/4" = 1'-0"

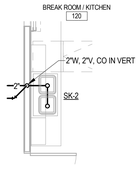

10 P101 PARTIAL PLAN - PLUMBING
SCALE: 1/4" = 1'-0"

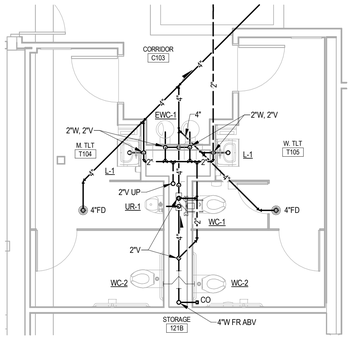

11 P101 PARTIAL PLAN - PLUMBING
SCALE: 1/4" = 1'-0"

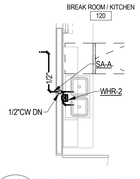

12 P101 PARTIAL PLAN - PLUMBING
SCALE: 1/4" = 1'-0"

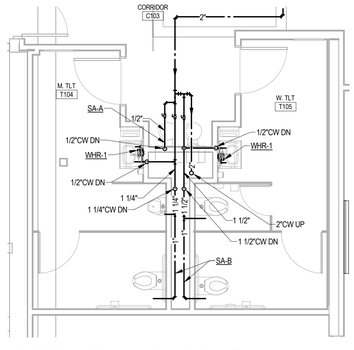

13 P101 PARTIAL PLAN - PLUMBING
SCALE: 1/4" = 1'-0"

PARTIAL PLAN NOTES:

1. EXTEND NEW SANITARY WASTE PIPING TO EXISTING SANITARY WASTE PIPING IN WALL BEHIND EXISTING LAVATORY.
2. EXTEND NEW VENT PIPING TO EXISTING VENT PIPING ABOVE CEILING BEHIND EXISTING LAVATORY.

0 2' 4' 8'
SCALE: 1/4" = 1' - 0"

SPECTRUM DESIGN
architects | engineers

Plaza Suite 1
10 Church Avenue, SE
Roanoke, VA 24011

540.342.6001
spectrumpc.com

LPA
LAWRENCE PERRY & ASSOCIATES
Consulting Engineers
15 E Salem Avenue SE, Suite 101
Roanoke, Virginia 24011
Ph: (540).342-1816
Fax: (540).344-3410
Comm. No.: 25114

© Lawrence Perry and Associates, Inc.

RENOVATIONS & ADDITIONS TO

BEDFORD COUNTY SHERIFF'S OFFICE

SPECTRUM DESIGN PROJECT NO.: **24112**

COMMONWEALTH OF VIRGINIA
04/13/2026
RICHARD C. HUGHES
Lic. No. 045688
PROFESSIONAL ENGINEER

PROJ. MGR.:	CHECKED BY:	DRAWN BY:
RCH	MGW	CAD

SHEET ISSUE DATE:
04.13.2026

PROJECT PHASE:
CONSTRUCTION DOCUMENTS

SHEET REVISIONS:

PLAN NORTH SITE NORTH

SHEET NAME:
ENLARGED FLOOR PLANS - PLUMBING

SHEET NUMBER:
P201

ORIGINAL SIZE: ARCH E1 (30X42) | 5/4/2026 11:46:39 AM
C:\Users\cadd\Documents\2314 - Bedford Sheriff's Office - PLUMB - R25_cadefilev.rvt

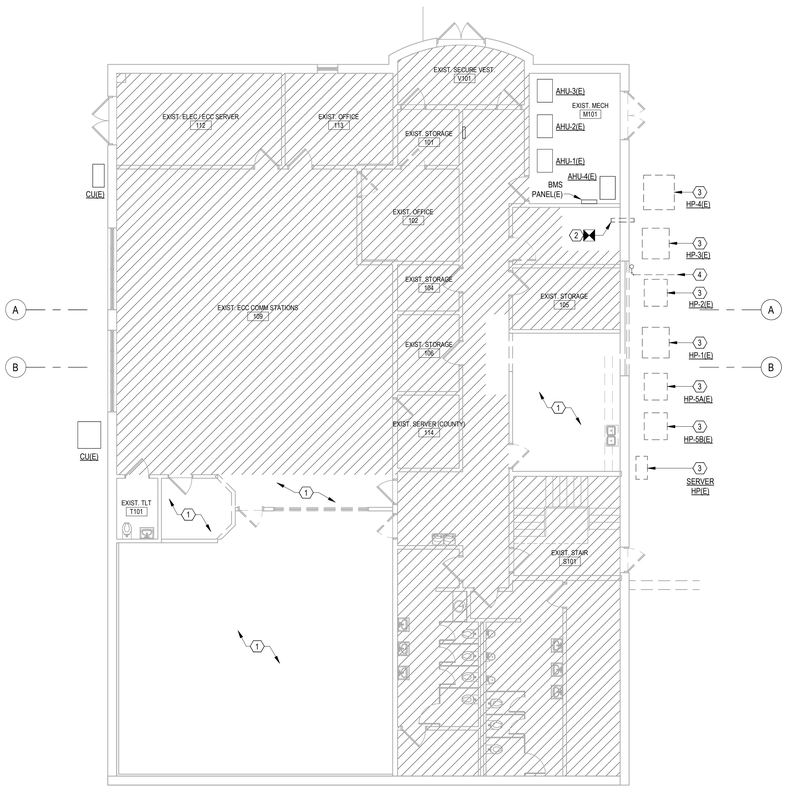

GROUND FLOOR DEMOLITION PLAN - HVAC

SCALE: 1/8" = 1'-0"

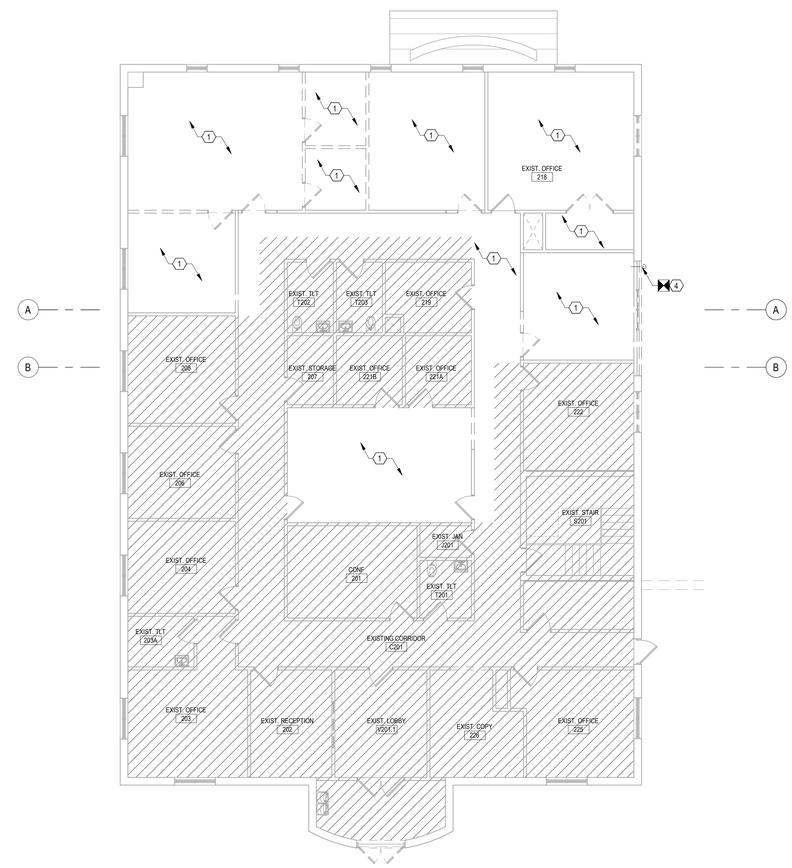

FIRST FLOOR DEMOLITION PLAN - HVAC

SCALE: 1/8" = 1'-0"

GENERAL DEMOLITION NOTES:

1. NO DEMOLITION SCOPE IN HATCHED AREAS.

DEMOLITION PLAN NOTES: (#)

1. DEMOLISH ALL AIR TERMINALS IN CEILING. AIR TERMINALS IN GOOD CONDITION SHALL BE CLEANED AN RE-USED. SEE NEW WORK PLAN FOR NEW AIR TERMINAL LOCATIONS IN THIS AREA.
2. DEMOLISH EXTERIOR DUCT WALL CAP AND RE-ROUTE DUCT THRU EXISTING MECHANICAL ROOM EXTERIOR WALL.
3. RELOCATE SPLIT-SYSTEM HEAT PUMP CONDENSING UNIT. DEMOLISH ASSOCIATED REFRIGERANT LINESET TO/FROM CORRESPONDING EXISTING-TO-REMAIN INDOOR AIR HANDLING UNIT. SEE NEW WORK FLOOR PLANS FOR NEW HEAT PUMP CONDENSING UNIT LOCATIONS.
4. DEMOLISH EXISTING COOLING COIL CONDENSATE DRAIN LINE RUNNING VERTICALLY ALONG DOWNSPOUT. REROUTE TO SPILL ONTO NEW FLAT ROOFTOP.

0 4' 8' 16'

SCALE: 1/8" = 1'-0"

SPECTRUM DESIGN
architects | engineers

Plaza Suite 1
10 Church Avenue, SE
Roanoke, VA 24011

540.342.6001
spectrumpc.com

LPA
LAWRENCE PERRY & ASSOCIATES
Consulting Engineers

15 E Salem Avenue SE, Suite 101
Roanoke, Virginia 24011

Ph: (540)-342-1816
Fax: (540)-344-3410

Comm. No.: 25114

© Lawrence Perry and Associates, Inc.

RENOVATIONS & ADDITIONS TO

BEDFORD COUNTY SHERIFF'S OFFICE

SPECTRUM DESIGN PROJECT NO.: **24112**

COMMONWEALTH OF VIRGINIA
04/13/2026
RICHARD C. HUGHES
Lic. No. 045688
PROFESSIONAL ENGINEER

PROJ. MGR.: **RCH**
CHECKED BY: **JCW**
DRAWN BY: **RMP**

SHEET ISSUE DATE:
04.13.2026

PROJECT PHASE:
CONSTRUCTION DOCUMENTS

SHEET REVISIONS:

PLAN NORTH
SITE NORTH

SHEET NAME:
DEMOLITION FLOOR PLANS - HVAC

SHEET NUMBER:
MD101

ORIGINAL SIZE: ARCH E1 (30X42) | 3/4/2026 12:54:57 PM
C:\Users\rmp\Documents\25114 Bedford Sheriff's Office - MECH - R26_rjcuAAWTKxrt

AIR HANDLING UNITS: TRANE		
UNIT MARK	AHU-1 / CU-1	RTU-1
AREA SERVED	GROUND FLOOR	FIRST FLOOR
CV OR VAV	MULTIZONE VAV	MULTIZONE VAV
SUPPLY FAN AIRFLOW, CFM	4,380	6,285
ESP, IN. W.C.	3.02	1.68
MOTOR Hp	5	3
OUTSIDE AIRFLOW, CFM (DCV / MIN)	1125 / 1330	1900 / 1935
COOLING COIL (DX)		
TOTAL CAPACITY, MBH	182.5	211.2
SENSIBLE CAPACITY, MBH	125.1	156.1
ENT. AIR TEMP, ° F, DB / WB	83.60 / 68.80	81.60 / 67.80
LEAV. AIR TEMP, ° F, DB / WB	57.59 / 55.76	57.57 / 56.59
HEATING (HEAT PUMP)		
TOTAL CAPACITY, MBH	169.83	---
HEATING AIRFLOW, CFM	2955	---
ENT. AIR TEMP, ° F, DB / WB	60	---
LEAV. AIR TEMP, ° F, DB / WB	95.75	---
HEATING COIL (ELECTRIC)		
HEATING CFM	---	4,235
OUTPUT CAPACITY, kW	---	36.0
ENT. AIR TEMP, ° F, DB	---	53
LEAV. AIR TEMP, ° F, DB	---	70.84
FILTERS (TYPE)		
SUPPLY	MERV 13	MERV 13
UNIT ELECTRICAL, V / Ph	460 / 3	460 / 3
MCA / MOP, A	10.47 / 15	72 / 80
SCCR, kAIC	5	65
ESTIMATED UNIT WEIGHT, LBS	1,506	2,343
UNIT MODEL NO.	UCCAG10C0J	TSK210A4S0N
OUTDOOR CONDENSING UNIT		
NOMINAL CAPACITY, MBH	180	---
UNIT ELECTRICAL, V / Ph	460 / 3	---
MCA / MOP, A	33 / 40	---
SCCR, kAIC	5	65
ESTIMATED UNIT WEIGHT, LBS	782	---
UNIT MODEL NO.	TWA180K4DAA	---

AHU-1 / CU-1 NOTES:
1. COOLING SELECTIONS BASED ON 93.1°F AMBIENT TEMP.
2. HEAT PUMP HEATING PERFORMANCE BASED ON 45°F AMBIENT TEMP.
3. PROVIDE FACTORY MOUNTED DISCONNECT SWITCH AND PHASE-LOSS MONITORING FOR AHU & CU.
4. PROVIDE FACTORY MOUNTED VFDs.
5. MOUNT CU-1 ON EQUIPMENT RAILS.
6. SUPPLY FAN EXTERNAL STATIC PRESSURE INCLUDES 0.25 INCHES H2O FOR FILTER LOADING.
7. PROVIDE ENTHALPY ECONOMIZER.

RTU-1 NOTES:
1. COOLING SELECTIONS BASED ON 93.1°F AMBIENT TEMP.
2. HEATING SELECTIONS BASED ON 13°F AMBIENT TEMP.
3. PROVIDE FACTORY MOUNTED DISCONNECT SWITCH, PHASE-LOSS MONITORING, AND FACTORY WIRED GFI OUTLET.
4. PROVIDE FACTORY MOUNTED VFDs.
5. PROVIDE 14" CURB SUITABLE FOR PITCHED ROOF.
6. SUPPLY FAN EXTERNAL STATIC PRESSURE INCLUDES 0.25 INCHES H2O FOR FILTER LOADING.
7. PROVIDE POWER EXHAUST & ENTHALPY ECONOMIZER.

ELECTRIC HEATERS: MARKEL

MARK	TYPE	LOCATION	CAPCITY (KW)	AIRFLOW (CFM)	VOLTS/PH	UNIT WEIGHT (LBS)	MODEL	NOTES
EH-1	RECESSED CEILING HEATER	V202 SECURE VEST.	2.0	600	277/1	45	3480	1,2,3,4
EWH-1	RECESSED WALL HEATER	T206 PUBLIC TLT.	2.0	100	277/1	6	305	1,2,4,5
EUH-1	UNIT HEATER	M102 NEW MECH.	3.3	400	480/3	36	UH	1,3,6
ECH-1	CABINET HEATER	S102 STAIR	2.0	250	480/3	99	6300	1,4,7

NOTES:
1. PROVIDE INTEGRAL DISCONNECT.
2.PROVIDE INTEGRAL TAMPER-PROOF THERMOSTAT.
3. PROVIDE MANUFACTURER RECESS BOX AND BOTTOM GRILLE ASSEMBLY.
4. INCLUDE RESETTING TYPE LIMIT CONTROL FOR OVERHEAT PROTECTION.
5. PROVIDE MANUFACTURER WALL BOX FOR RECESSED MOUNTED.
6. PROVIDE FACTORY 24V STEP-DOWN TRANSFORMER AND HEATING-ONLY THERMOSTAT.
7. FRONT RETURN & TOP DISCHARGE GRILLE CONFIGURATION.

FANS: GREENHECK

MARK	TYPE	CFM	ESP	RPM	MOTOR HP	VOLTS/PH	UNIT WEIGHT (LBS)	MODEL	NOTES
EF-1	ROOF DOWNBLAST	400	0.30	1246	1/10	115/1	41	G-90-VG	1,2,4,5
EF-2	ROOF DOWNBLAST	200	0.35	1533	1/15	115/1	36	G-70-GV	1,2,3,5
EF-3	INLINE	425	0.40	1555	1/6	115/1	34	SQ-90-VG	1,2,4

NOTES:
1. PROVIDE FACTORY INSTALLED DISCONNECT SWITCH.
2. PROVIDE SPEED CONTROLLER FOR AIR BALANCE OF FAN.
3. PROVIDE LINE-VOLTAGE COOLING-ONLY THERMOSTAT.
4. RUN CONTINUOUSLY DURING BUILDING OCCUPIED MODE.
5. PROVIDE 14" CURB FOR PITCHED ROOF W/ INTEGRAL BACKDRAFT DAMPER.

VARIABLE AIR VOLUME HEATING BOXES: TRANE

				COOLING CFM				HEATING CAPACITY	ELEC		
MARK	TYPE	MAX AIR P.D., IN. W.C.	INLET Ø, IN.	MAX	DCV MIN	MIN	HEATING CFM	KW	VOLTS/PH	MODEL #	NOTES
VAV-101	SHUT-OFF	0.25	6	350	---	105	240	3.0	277 / 1	VCEF	1,2,3,4
VAV-102	SHUT-OFF	0.25	8	700	100	210	470	6.0	480 / 3	VCEF	1,2,3,4
VAV-103	SHUT-OFF	0.25	6	480	---	145	325	4.0	480 / 3	VCEF	1,2,3,4
VAV-104	SHUT-OFF	0.25	8	635	---	195	430	5.5	480 / 3	VCEF	1,2,3,4
VAV-105	SHUT-OFF	0.25	8	670	285	205	450	5.5	480 / 3	VCEF	1,2,3,4
VAV-106	SHUT-OFF	0.25	6	400	---	120	265	2.5	277 / 1	VCEF	1,2,3,4
VAV-107	SHUT-OFF	0.25	8	600	150	180	400	4.0	480 / 3	VCEF	1,2,3,4
VAV-108	SHUT-OFF	0.25	8	650	150	180	435	4.0	480 / 3	VCEF	1,2,3,4
VAV-201	SHUT-OFF	0.25	6	400	---	120	270	3.5	277 / 1	VCEF	1,2,3,4
VAV-202	SHUT-OFF	0.25	8	850	---	255	570	7.0	480 / 3	VCEF	1,2,3,4
VAV-203	SHUT-OFF	0.25	6	450	---	135	300	4.0	480 / 3	VCEF	1,2,3,4
VAV-204	SHUT-OFF	0.25	10	950	---	285	635	8.0	480 / 3	VCEF	1,2,3,4
VAV-205	SHUT-OFF	0.25	6	450	---	135	300	4.0	480 / 3	VCEF	1,2,3,4
VAV-206	SHUT-OFF	0.25	6	345	---	110	230	3.0	277 / 1	VCEF	1,2,3,4
VAV-207	SHUT-OFF	0.25	6	425	---	130	290	3.5	277 / 1	VCEF	1,2,3,4
VAV-208	SHUT-OFF	0.25	5	300	---	120	205	2.5	277 / 1	VCEF	1,2,3,4
VAV-209	SHUT-OFF	0.25	10	1000	115	300	670	8.0	480 / 3	VCEF	1,2,3,4
VAV-210	SHUT-OFF	0.25	6	400	---	120	280	3.5	277 / 1	VCEF	1,2,3,4
VAV-211	SHUT-OFF	0.25	5	240	---	75	160	2.0	277 / 1	VCEF	1,2,3,4
VAV-212	SHUT-OFF	0.25	6	475	---	150	325	4.0	277 / 1	VCEF	1,2,3,4

NOTES:
1. BOX AIR PRESSURE DROP (INCLUDING HEATING COIL) SHALL NOT EXCEED THE SCHEDULED QUANTITY.
2. ELECTRIC HEATERS SHALL HAVE SCR CONTROL.
3. PROVIDE STEP-DOWN TRANSFORMER FROM SCHEDULED UNIT VOLTAGE TO 24V. PROVIDE DISCONNECT SWITCH.
4. ROUND DUCT FROM MAIN TO VAV INLET SHALL MATCH SCHEDULED INLET DIMENSION UNLESS OTHERWISE NOTED.

GRILLES, REGISTERS AND DIFFUSERS: PRICE

MARK	SERVICE	TYPE	FACE SIZE, IN. x IN.	NECK SIZE, IN. x IN.	MAX AIR P.D., IN. H2O	MAX N.C.	MODEL #	NOTES
A	SUPPLY	LAY-IN DIFFUSER	24 x 24	6"∅	0.1	25	SCDA	1,2,3
B	SUPPLY	LAY-IN DIFFUSER	24 x 24	8"∅	0.1	25	SCDA	1,3
C	SUPPLY	LAY-IN DIFFUSER	24 x 24	10"∅	0.1	25	SCDA	1,3
D	SUPPLY	LAY-IN DIFFUSER	24 x 24	12"∅	0.1	25	SCDA	1,3
E	SUPPLY	SURFACE MOUNTED REGISTER	6 x 6	8" x 8"	0.1	25	520	4
F	SUPPLY	SURFACE MOUNTED REGISTER	8 x 4	10" x 6"	0.1	25	520	4
X	EXHAUST	SURFACE MOUNTED REGISTER	6 x 6	8" x 8"	0.05	20	530	4
Y	EXHAUST	SURFACE MOUNTED REGISTER	10 x 10	12" x 12"	0.05	20	530	4
Z	RETURN	LAY-IN GRILLE	24 x 24	24" X 24"	0.05	20	530	---

NOTES:
1. DIFFUSER SHALL BE 4-WAY UNLESS OTHERWISE NOTED.
2. PROVIDE SURFACE MOUNT FRAME AS REQUIRED FOR INSTALLATION IN HARD CEILING IN 245 INTERVIEW, 246 INTERVIEW, & 247 OBSERVATION.
3. FLEX DUCT CONNECTION SHALL EQUAL THE DIAMETER OF DIFFUSER CONNECTION.
4. DUCT CONNECTION FROM MAIN SHALL MATCH THE SIZE OF THE REGISETER INLET CONNECTION.

SPLIT SYSTEM HEAT PUMP: TRANE

			COOLING		HEATING		ELECTRICAL				
MARK	TYPE	AIRFLOW (CFM) (HIGH/LOW)	TOTAL CAP (MBH)	EAT COOLING DEG F. DB/WB	TOTAL CAP (MBH)	EAT HEATING DEG F.	V/PH	MCA	MOCP	MODEL	NOTES
DSS-1	WALL-MOUNTED	375/215	12.2	80/67	13	70	POWERED BY OUTDOOR UNIT			PKA-AL12NL	1,2,3,6
HP-1	OUTDOOR CONDENSING UNIT	---	---	---	---	---	208/1	16	27	PUY-AL12NL	4,5

NOTES:
1. COOLING AND HEATING CAPACITY BASED ON ARI CONDITIONS.
2. FURNISH WITH SEVEN DAY PROGRAMABLE THERMOSTAT.
3. PROVIDE 208V CONDENSATE DRAIN PUMP PER MANUFACTUER SPECIFICACTIONS, MANUFACTURER 25' LINESET, AND DISCONNECT SWITCH.
4. PROVIDE MANUFACTURER 25' LINESET AND DISCONNECT SWITCH
5. MOUNT ON EQUIPMENT RAILS. SEE MECHANIAL DETAILS.
5. UNIT SHALL OPERATE IN COOLING-MODE ONLY. LOCK OUT HEATING MODE.

GENERAL NOTES:

1. ALL DUCTWORK AND PIPES SHALL BE COORDINATED WITH OTHER NEW DUCTS, PIPES, LIGHTS, STRUCTURAL SYSTEM, CEILING SUPPORTS AND FRAMING BEFORE INSTALLATION. MINOR DUCT AND PIPE OFFSETS AND MINOR DUCT TRANSITIONS SHALL BE PROVIDED AS REQUIRED. WHERE TRANSITIONS ARE REQUIRED, CROSS SECTIONAL AREA OF DUCT SHALL NOT BE REDUCED. MEASUREMENTS FOR VERTICAL CLEARANCES OF DUCTWORK SHALL BE TAKEN AT THE JOB SITE BEFORE FABRICATION OF ANY DUCTWORK.
2. ALL EQUIPMENT SHALL BE INSTALLED IN ACCORDANCE WITH MANUFACTURER'S PUBLISHED INSTRUCTIONS.
3. MATERIALS AND INSTALLATION SHALL COMPLY WITH LOCAL CODES, APPLICABLE PROVISIONS OF LATEST EDITION OF NATIONAL FIRE PROTECTION ASSOCIATION, LOCAL UTILITY REGULATIONS AND GOVERNMENTAL DEPARTMENTS HAVING JURISDICTION.
4. CONTRACTOR SHALL SEAL AND FLASH ALL PENETRATIONS IN EXISTING ROOF AND WALLS.
5. VERIFY ALL EXISTING AND NEW ROOF AND WALL OPENINGS WITH STRUCTURE.
6. VERIFY THE LOCATION OF ALL THERMOSTATS, TEMPERATURE SENSORS, PANELS AND CONTROL INSTRUMENTS WITH THE ARCHITECT AND OWNER PRIOR TO ROUGH-IN.
7. ALL CUTTING AND PATCHING FOR THE INSTALLATION OF NEW WORK IN EXISTING BUILDING SHALL BE DONE BY THE GENERAL CONTRACTOR.
8. REFER TO ARCHITECTURAL, STRUCTURAL AND ELECTRICAL DRAWINGS TO COORDINATE THE EXACT LOCATIONS OF DIFFUSERS, REGISTERS, GRILLES, PIPING AND OTHER MECHANICAL EQUIPMENT WITH CEILING GRID, LIGHTS, BEAMS AND OTHER BUILDING COMPONENTS.
9. CONTRACTOR SHALL PROVIDE ALL SUPPORTS REQUIRED TO MOUNT MECHANICAL EQUIPMENT, PIPING AND DUCTWORK.
10. WHERE PIPE AND DUCT CONNECTIONS ARE SHOWN CONNECTING TO EXISTING, CONTRACTOR SHALL DETERMINE EXACT LOCATIONS AND CONNECTION SIZES PRIOR TO INSTALLATION.
11. ALL FLEXIBLE DUCTS CONNECTED TO SUPPLY DIFFUSERS SHALL BE SIZED TO EQUAL THE DIFFUSER NECK DIAMETER.
12. PROVIDE FLEXIBLE DUCT CONNECTIONS BETWEEN THE SUPPLY AND RETURN DUCTS FROM THE AIR UNITS AND FANS. FLEXIBLE CONNECTIONS SHALL BE WEATHERTIGHT WHEN EXPOSED.
13. PROVIDE CONDENSATE DRAIN PIPING FROM AIR CONDITIONING UNITS DRAIN PAN AND SPILL TO ROOF AWAY FROM WALKWAY. PIPING SHALL BE THE SAME SIZE AS THE DRAIN PAN CONNECTION AND SHALL INCLUDE A 6-INCH TRAP TO PREVENT SIPHONING BY THE SUPPLY AIR FAN.
14. EXPOSED PIPING RUNOUTS SHALL BE INSTALLED IN PRACTICAL ALIGNMENT WITH THE BUILDING AND SHALL BE ADEQUATELY SECURED TO THE BUILDING STRUCTURE.
15. ALL CEILING DIFFUSERS SHALL BE 4-WAY THROW TYPE UNLESS NOTED OTHERWISE.
16. FOR EXACT LOCATIONS OF CEILING DEVICES, SEE REFLECTED CEILING PLAN.
17. FINAL LOCATION OF ROOF-MOUNTED EQUIPMENT SHALL BE COORDINATED WITH ROOF FRAMING. VERIFY ROOF OPENINGS WITH STRUCTURE.
18. PROVIDE ACCESS DOORS OF SUFFICIENT SIZE FOR ALL CONCEALED CONTROLS, DAMPERS OR ANY ITEMS REQUIRING ACCESS.
19. AIR DEFLECTORS SHALL BE PROVIDED IN ALL SQUARE ELBOWS.
20. CEILING GRID AND OTHER ITEMS SHALL NOT BE SUPPORTED FROM OR IN CONTACT WITH DUCT, PIPING, OR MECHANICAL EQUIPMENT. CONDUIT, WIRING, PIPING AND SUPPORTS SHALL NOT BE LOCATED BELOW FAN COIL ACCESS PANELS.
21. DUCTWORK AND PIPING SHALL NOT BE INSTALLED ABOVE ELECTRICAL PANELS. COORDINATE INSTALLATION OF DUCTWORK AND PIPING WITH ELECTRICAL PANELS WHEN SHOWN NEAR PANELS OR OVER ELECTRICAL ROOMS.
22. SYSTEMS SHALL OPERATE UNDER CONDITIONS OF LOAD WITHOUT UNUSUAL OR EXCESSIVE NOISE OR VIBRATION. UNUSUAL OR EXCESSIVE NOISE OR VIBRATION SHALL BE CORRECTED.
23. EQUIPMENT, MATERIALS AND LABOR REQUIRED BY THESE CONTRACT DRAWINGS SHALL BE GUARANTEED TO BE FREE FROM DEFECTIVE MATERIALS OR WORKMANSHIP FOR ONE YEAR AFTER FINAL ACCEPTANCE OF THE PROJECT UNLESS SPECIFIED OTHERWISE. DEFECTIVE MATERIALS OR WORKMANSHIP OCCURRING DURING THIS PERIOD SHALL BE CORRECTED AT NO ADDITIONAL COST.

DEMOLITION NOTES:

1. THE CONTRACTOR SHALL REMOVE OR ALTER AS NECESSARY ALL EXISTING PIPING, EQUIPMENT, EQUIPMENT FOUNDATIONS, AND APPURTENANCES THAT ARE NOT REQUIRED FOR THE EXISTING SYSTEMS TO REMAIN. CONTRACTOR SHALL VISIT THE SITE TO DETERMINE THE SCOPE OF THIS WORK AND VERIFY EXISTING CONDITIONS PRIOR TO SUBMITTING BIDS.
2. EXISTING EQUIPMENT SHALL BE TURNED OVER TO THE OWNER, UNLESS DIRECTED OTHERWISE AND LOCATED AS DIRECTED BY THE OWNER. ALL OTHER ITEMS TO BE REMOVED SHALL BECOME THE PROPERTY OF THE CONTRACTOR AND REMOVED FROM THE PREMISES.
3. INSULATION ON EXISTING PIPING THAT IS DAMAGED OR REMOVED DUE TO THE DEMOLITION WORK SHALL BE REPLACED AND SEALED AS REQUIRED.

REFRIGERANT PIPE NOTES:

1. ALL REFRIGERANT PIPING SHALL BE SIZED AND INSTALLED PER EQUIPMENT MANUFACTURER'S REQUIREMENTS. SIZES AND QUANTITIES OF REFRIGERANT PIPING SHALL BE DETERMINED BY EQUIPMENT MANUFACTURER. PIPING SHOWN ON DRAWINGS IS DIAGRAMMATIC ONLY AND INTENDED ONLY TO REPRESENT THE SCOPE OF WORK AND PREFERRED ROUTING.

HVAC LEGEND

ABOVE FINISHED FLOOR	AFF	
AIR HANDLING UNIT	AHU	
BACKDRAFT DAMPER	BD	
BELOW	BEL	
BETWEEN	BET	
BUILDING PRESSURE SENSOR	BPS	
CAPACITY	CAP	
CARBON DIOXIDE DETECTOR		CO2
CEILING	CLG	
CEILING DIFFUSER	CD	
CEILING GRILLE	CG	
CEILING REGISTER	CR	
CUBIC FEET PER MINUTE	CFM	
DEGREES FAHRENHEIT	°F	
DIAMETER	DIA	
DIRECTION OF FLOW		
DIRECTION OF SLOPE DOWN		
DOWN	DN	
DRAIN PIPE (COOLING COIL CONDENSATE)		D
DRY BULB	DB	
DUCT SLOPE DOWN		DN
DUCT SLOPE UP		UP
ELECTRIC HEATER	EH	
ELECTRIC CABINET HEATER	ECH	
ELECTRIC UNIT HEATER	EUH	
ELECTRIC WALL HEATER	EWH	
ENTERING AIR TEMPERATURE	EAT	
EXHAUST AIR	EA	
EXHAUST FAN	EF	
EXTERNAL STATIC PRESSURE	ESP	
FEET	FT	
FEET PER MINUTE	FPM	
FIRE DAMPER	FD	
FIRESTAT	FS	
FLEXIBLE DUCT CONNECTION		
FLOOR	FL	
FROM	FR	
GALLONS	GAL	
GALLONS PER MINUTE	GPM	
HORSEPOWER	HP	
HOUR	HR	
INCH	IN	
KILOWATT	KW	
LEAVING AIR TEMPERATURE	LAT	
LEAVING WATER TEMPERATURE	LWT	
LOUVER	LVR	
MANUAL DAMPER	MD	
MOTOR OPERATED DAMPER	MOD	
NORMALLY CLOSED	NC	
NORMALLY OPEN	NO	
OUTDOOR AIR	OA	
PIPING INDICATION WITH RESPECT TO FLOW:		
BOTTOM TAKEOFF		
SIDE CONNECTION		
TOP TAKEOFF		
TURN DOWN OR FROM BELOW		
TURN UP OR DOWN		
TURN UP OR FROM ABOVE		
POUNDS	LBS	
POINT OF CONNECTION (NEW WORK)		
POINT OF DISCONNECT (DEMOLITION)		
POUNDS PER SQUARE INCH GAGE	PSIG	
PRESSURE DROP	PD	
REFRIGERANT PIPE		R
RETURN AIR	RA	
REVOLUTIONS PER MINUTE	RPM	
ROOFTOP AIR HANDLING UNIT	RTU	
SMOKE DETECTOR (DUCT MOUNTED)		SD
STATIC PRESSURE	SP	
STATIC PRESSURE SENSOR (DUCT MOUNTED)		SPS
SUPPLY AIR	SA	
THERMOSTAT OR TEMPERATURE SENSOR	T'STAT	T
THOUSAND BTU PER HOUR	MBH	
WET BULB	WB	

SPECTRUM DESIGN
architects | engineers

Plaza Suite 1
10 Church Avenue, SE
Roanoke, VA 24011
540.342.6001
spectrumpc.com

L | P | A
LAWRENCE PERRY & ASSOCIATES
Consulting Engineers
15 E Salem Avenue SE, Suite 101
Roanoke, Virginia 24011
Ph: (540) 342-1816
Fax: (540) 344-3410
Comm. No.: 25114

© Lawrence Perry and Associates, Inc.

RENOVATIONS & ADDITIONS TO

BEDFORD COUNTY SHERIFF'S OFFICE

SPECTRUM DESIGN PROJECT NO.: **24112**

COMMONWEALTH OF VIRGINIA
04/13/2026
RICHARD C. HUGHES
Lic. No. 045688
PROFESSIONAL ENGINEER

PROJ. MGR.: **RCH** CHECKED BY: **JCW** DRAWN BY: **RMP**

SHEET ISSUE DATE:
04.13.2026

PROJECT PHASE:
CONSTRUCTION DOCUMENTS

SHEET REVISIONS:

SHEET NAME:
HVAC LEGEND, NOTES, AND SCHEDULES

SHEET NUMBER:
M001

ORIGINAL SIZE : ARCH E1 (30X42) | 5/4/2026 12:34:53 PM
C:\Users\rmp\Documents\25114 - Bedford Sheriff's Office - MECH - R26_rpaulAH7T4.rvt

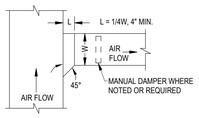

BRANCH DUCT CONNECTION DETAIL
SCHEMATIC

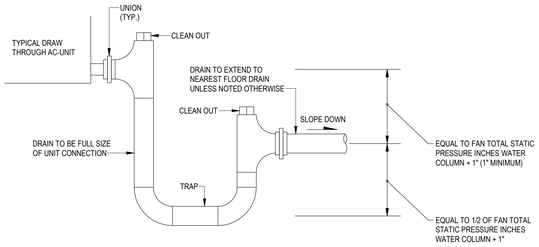

COOLING COIL CONDENSATE DRAIN
NO SCALE

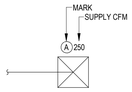

DIFFUSER SIZING DETAIL
NO SCALE

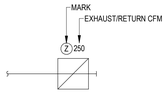

REGISTER SIZING DETAIL
NO SCALE

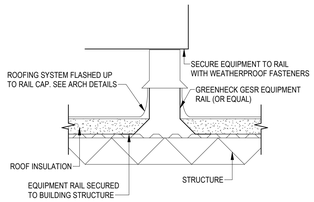

EQUIPMENT RAIL SUPPORT DETAIL
NO SCALE

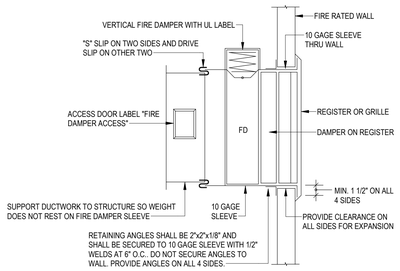

NOTE:
1. INSTALL ALL FIRE DAMPERS IN ACCORDANCE WITH THE N.F.P.A. PAMPHLET NO. 90A AND LOCAL CODES.
2. FASTEN FIRE DAMPER FRAME TO SLEEVE WITH 1/2" WELDS. AT 6" O.C.

FIRE DAMPER AT FIRE RATED WALL DETAIL
NO SCALE

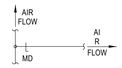

SINGLE LINE REPRESENTATION

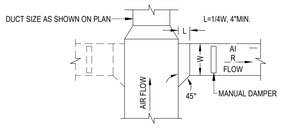

NOTE:

LATERAL BRANCH DUCT DETAIL
SCHEMATIC

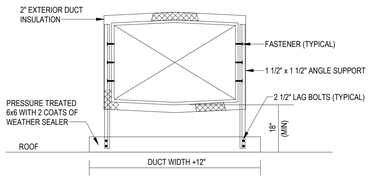

NOTES:
1. DUCT SUPPORTS SHALL BE SPACED 6'-0" OC MAX.
2. PROTECT ROOF WITH 1/2" NEOPRENE PAD SECURED TO BOTTOM OF 6x6'S.

ROOF DUCT-MOUNTING DETAIL
NO SCALE

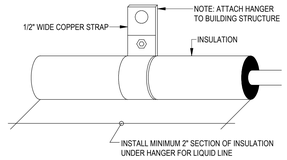

REFRIGERANT PIPING HANGER DETAIL
NO SCALE

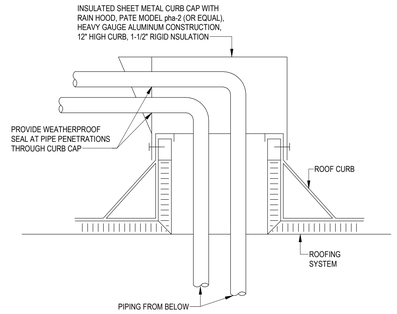

ROOFTOP PIPING PENETRATION DETAIL
NO SCALE

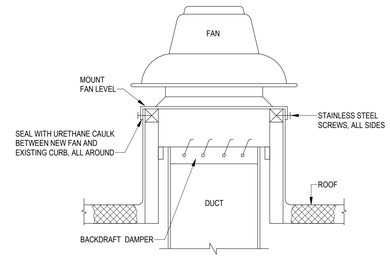

ROOF FAN DETAIL
NO SCALE

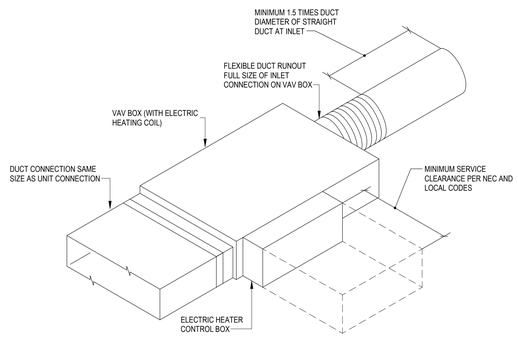

VARIABLE AIR VOLUME SHUT-OFF BOX WITH ELECTRIC HEAT CONNECTION DETAIL
SCHEMATIC

SPECTRUM DESIGN
architects | engineers

Plaza Suite 1
10 Church Avenue, SE
Roanoke, VA 24011

540.342.6001
spectrumpc.com

LPA
LAWRENCE PERRY & ASSOCIATES
Consulting Engineers

15 E Salem Avenue SE, Suite 101
Roanoke, Virginia 24011

Ph: (540) 342-1816
Fax: (540) 344-3410

Comm. No.: 25114

© Lawrence Perry and Associates, Inc.

RENOVATIONS & ADDITIONS TO

BEDFORD COUNTY SHERIFF'S OFFICE

SPECTRUM DESIGN PROJECT NO.: **24112**

COMMONWEALTH OF VIRGINIA
04/13/2026
RICHARD C. HUGHES
Lic. No. 045688
PROFESSIONAL ENGINEER

PROJ. MGR.: **RCH**
CHECKED BY: **JCW**
DRAWN BY: **RMP**

SHEET ISSUE DATE:
04.13.2026

PROJECT PHASE:
CONSTRUCTION DOCUMENTS

SHEET REVISIONS:

SHEET NAME:
HVAC DETAILS

SHEET NUMBER:
M002

ORIGINAL SIZE: ARCH E1 (30X42) | 5/4/2026 12:34:54 PM
C:\Users\rmp\Documents\25114 - Bedford Sheriff's Office - MECH - R23L-jcwJAN7TKLn1

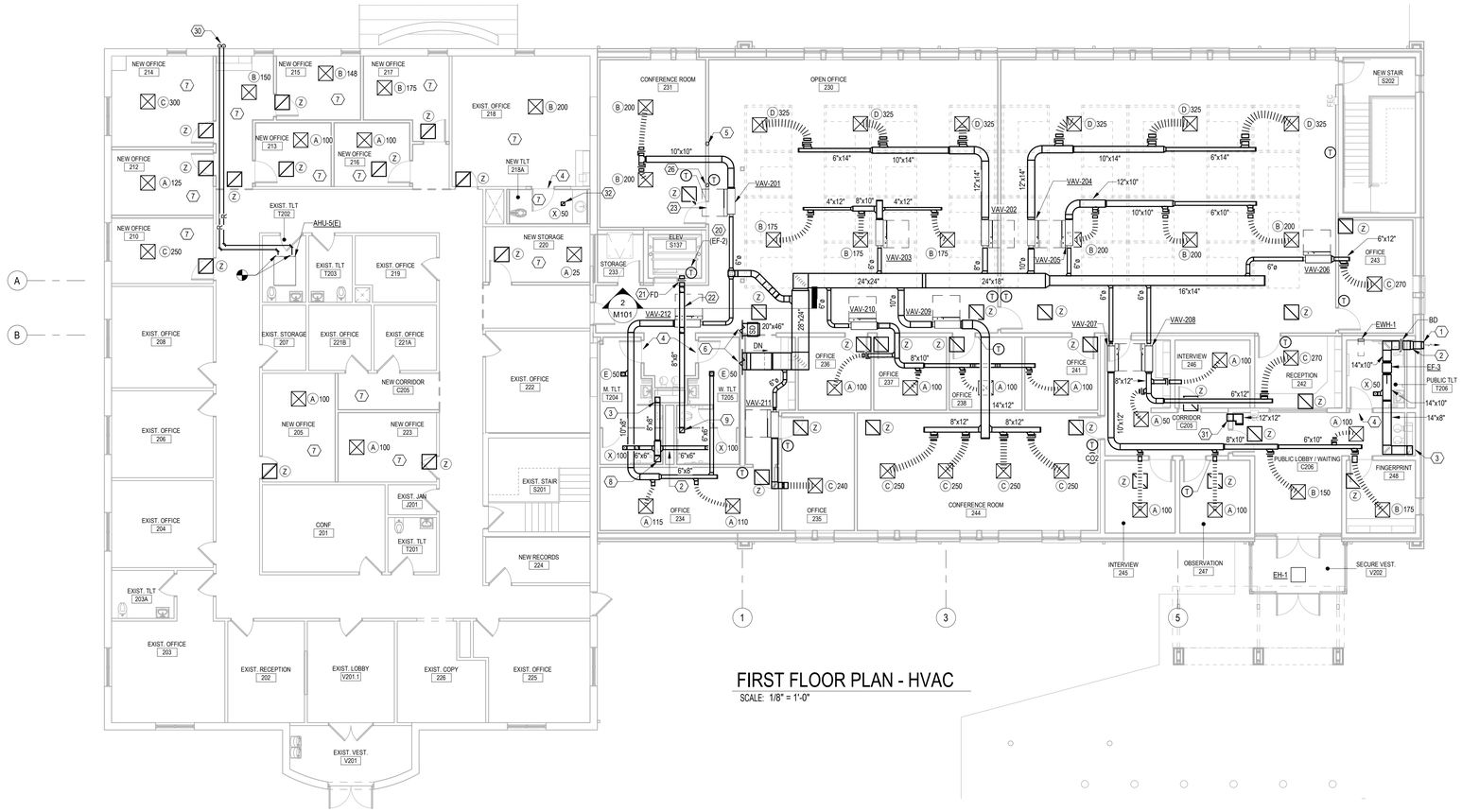

FIRST FLOOR PLAN - HVAC

SCALE: 1/8" = 1'-0"

GENERAL NOTES:

1. ALL FIRST FLOOR DUCTWORK AND EQUIPMENT SERVING FIRST FLOOR SHALL BE LOCATED IN ATTIC SPACE. ROUTE DUCTWORK AND EQUIPMENT THROUGH STRUCTURAL TRUSS SUPPORTS. SEE STRUCTURAL DRAWINGS FOR TRUSS FRAMING.
2. VAV BOXES LOCATED WITH ATTIC SPACE SHALL BE LOCATED BETWEEN TRUSS SUPPORTS TO ENSURE REQUIRED CLEARANCE IS PROVIDED FOR ELECTRIC HEATING COILS. VAV BOXES SHALL BE LOCATED NO HIGHER THAN 12'-0" AFF.
3. MAINTAIN MINIMUM 36" CLEARANCE ON SIDE OF VAV BOX HEATING ELEMENT. OVERLAPPING VAV BOX CLEARANCES ARE ACCEPTABLE.

PLAN NOTES:

1. 12"X12" EXHAUST LOUVER WITH BIRD SCREEN. MIN. FREE AREA 0.87 SQFT. MAINTAIN MIN. 3'-0" FROM OPERABLE WINDOWS.
2. COORDINATE DUCT PENETRATIONS THRU PLUMBING CHASE WITH PLUMBING CONTRACTOR.
3. EA DUCT FROM BELOW. COORDINATE DUCT IN CHASE WITH PLUMBING CONTRACTOR.
4. UNDERCUT DOOR 1/2".
5. AHU-1 / CU-1 REFRIGERANT LINESET UP/DN THRU WALL.
6. SA / RA DUCT THRU ATTIC SIDEWALL TO RTU-1. SEE MECHANICAL ROOF PLAN.
7. PROVIDE NEW AIR TERMINAL(S) AS NOTED ON FLOOR PLAN. MODIFY EXISTING AND PROVIDE NEW DUCT AS REQUIRED TO MAKE CONNECTIONS FROM EXISTING AIR HANDLING SYSTEM TO NEW AIR TERMINALS.
8. 10"X10" EA DUCT UP TO EF-1.
9. 6"X6 EA DUCT UP TO EF-2.
10. EA UP THRU PLUMBING CHASE ABOVE. COORDINATE DUCT IN CHASE WITH PLUMBING CONTRACTOR.
11. FLOOR-MOUNT CABINET HEATER. COORDINATE INSTALLATION W/ FLOORING.
12. 36"X72" INTAKE LOUVER. MIN 17.52 SQFT FREE AREA. PROVIDE 12" DEEP PLENUM BOX. LOUVER SHALL BE LOCATED MIN. 10'-0" FROM RELIEF LOUVER.
13. 24"X72" RELIEF LOUVER. MIN 17.52 SQFT FREE AREA. PROVIDE 12" PLENUM BOX WITH MOTOR OPERATED DAMPER. TERMINATE W/ 1/2" WIRE MESH SCREEN. LOUVER SHALL BE LOCATED MIN. 3'-0" FROM OPERABLE DOORS AND 10'-0" FROM OUTSIDE AIR INTAKE LOUVER.
14. PROVIDE CONCRETE HOUSING PAD. PAD SHALL EXTEND MIN. 4" BEYOND UNIT IN ALL DIRECTIONS.
15. REFRIGERANT LINESET TO/FROM WALL CHASE ABOVE TO CU-1 ON ROOF.
16. PIPE COOLING COIL CONDENSATE DRAIN LINE AND SPILL TO FLOOR DRAIN.
17. EXTEND RA DUCT 12" THRU WALL AND TERMINATE W/ 1/2" WIRE MESH SCREEN.
18. MOUNT BOTTOM OF UNIT HEATER NO MORE THAN 9'-0" AFF. DIRECT HEATER AND LOUVERED OUTLET TOWARDS DOORS.
19. RELOCATED EXISTING SPLIT-SYSTEM HEAT PUMP CONDENSING UNITS ON NEW CONCRETE PAD. PROVIDE NEW REFRIGERANT LINESETS FOR EACH UNIT FROM CORRESPONDING EXISTING-TO-REMAIN INDOOR AIR HANDLING UNIT.
20. LOCATE EF-2 THERMOSTAT AT TOP OF HOISTWAY. COORDINATE LOCATION WITH ELEVATOR INSTALLER TO ENSURE THERMOSTAT DOES NOT IMPEDE ELEVATOR OPERATION.
21. PROVIDE DUCT ACCESS DOOR ACCESSIBLE FROM CORRIDOR FOR FIRE DAMPER ACCESS. EXTEND DUCT 4" THRU HOISTWAY AND TERMINATE WITH WIRE MESH GRILLE. COORDINATE LOCATION WITH ELEVATOR INSTALLER TO ENSURE DUCT DOES NOT IMPEDE ELEVATOR OPERATION.
22. OFFSET EA DUCT TO PROVIDE VAV BOX ELECTRICAL CLEARANCE.
23. FRAME OUT WALL ABOVE CEILING TO PROVIDE VAV BOX ELECTRICAL CLEARANCE.
24. AHU-1 / CU-1 REFRIGERANT LINE SENT UP THRU ROOF TO CU-1.
25. SUSPEND GRILLES 9'-0" AFF.
26. DSS-1 / HP-1 REFRIGERANT LINESET UP/DN THRU WALL.
27. PIPE CONDENSATE TO NEW JANITOR 103 FLOOR DRAIN.
28. FUTURE RANGE AND ASSOCIATED HOOD TO BE INSTALLED BY OTHERS.
29. CONSOLIDATE PIPING RUNS ABOVE CEILING WITHIN EXISTING ECC COM STATIONS ROOM 109 TO REDUCE DISTURBANCES TO WORKSTATIONS DURING CONSTRUCTION.
30. PROVIDE LINESET COVER ON ALL NEW EXTERIOR PIPING. COVER COLOR SHALL MATCH EXISTING AND BE INSTALLED ONLY AFTER LINESETS HAVE BEEN FILLED, TESTED, AND INSULATED.
31. PROVIDE 1" ACOUSTICAL DUCT LINER. DUCT DIMENSIONS ACCOUNT FOR LINER.
32. DUCT TO EXISTING EXHAUST SYSTEM.

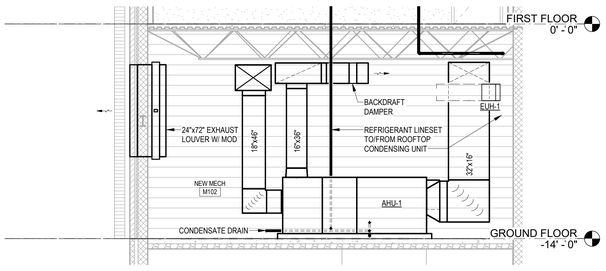

1 M101/M103 NEW MECH ROOM DUCTWORK

SCALE: 1/4" = 1'-0"

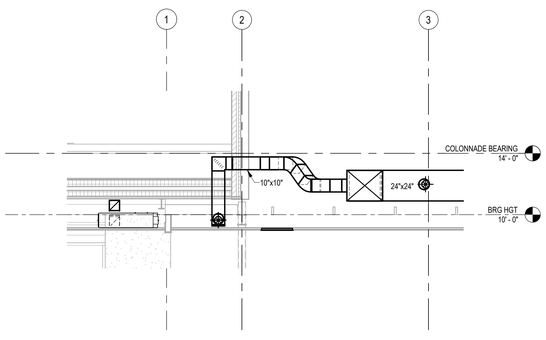

2 M101/M103 EXTERIOR SUPPLY DUCT PENATRATION

SCALE: 1/4" = 1'-0"

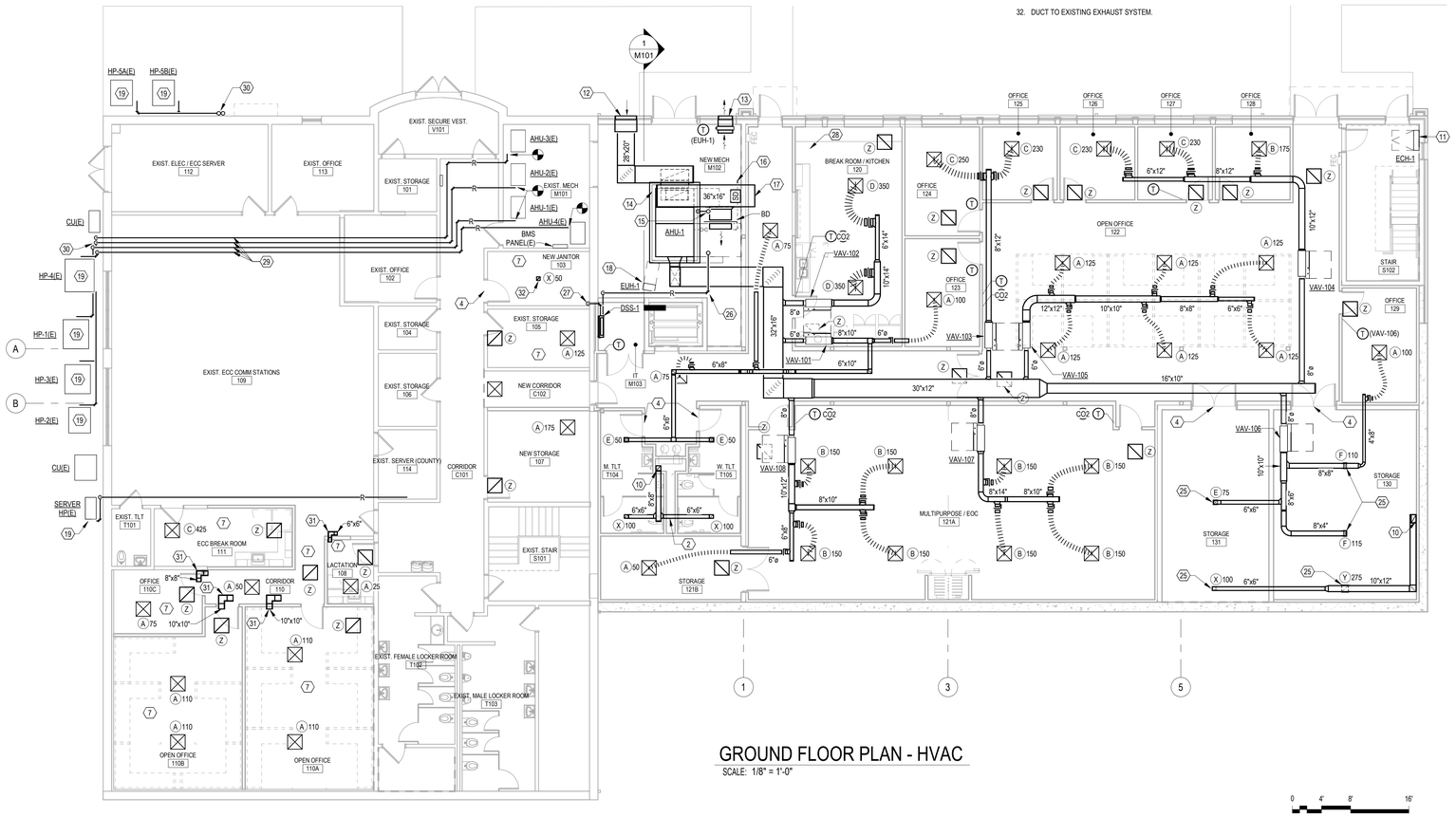

GROUND FLOOR PLAN - HVAC

SCALE: 1/8" = 1'-0"

0 4' 8' 16'

SCALE: 1/8" = 1' - 0"

SPECTRUM DESIGN
architects | engineers

Plaza Suite 1
10 Church Avenue, SE
Roanoke, VA 24011

540.342.6001
spectrumpc.com

LPA
LAWRENCE PERRY & ASSOCIATES
Consulting Engineers

15 E Salem Avenue SE, Suite 101
Roanoke, Virginia 24011

Ph: (540).342-1816
Fax: (540).344-3410

Comm. No.: 25114

© Lawrence Perry and Associates, Inc.

RENOVATIONS & ADDITIONS TO

BEDFORD COUNTY SHERIFF'S OFFICE

SPECTRUM DESIGN PROJECT NO.: **24112**

COMMONWEALTH OF VIRGINIA
04/13/2026
RICHARD C. HUGHES
Lic. No. 045688
PROFESSIONAL ENGINEER

PROJ. MGR.: **RCH**
CHECKED BY: **JCW**
DRAWN BY: **RMP**

SHEET ISSUE DATE:
04.13.2026

PROJECT PHASE:
CONSTRUCTION DOCUMENTS

SHEET REVISIONS:

PLAN NORTH
SITE NORTH

SHEET NAME:
FLOOR PLANS - HVAC

SHEET NUMBER:
M101

ORIGINAL SIZE - ARCH E1 (30X42) | 5/4/2026 12:33:00 PM
C:\Users\rmp\Documents\25114 - Bedford Sheriff's Office - MECH - R23_rpcuAnKFfxn1

GENERAL NOTES:

1. SLOPE COOLING CONDENSATE PIPE NO LESS THAN 1/8" PER 12" OF PIPE TOWARDS ROOF DRAIN.
2. SEE MECHANICAL SCHEDULES FOR EQUIPMENT ROOF CURB AND EQUIPMENT RAIL MOUNTING TYPES.

PLAN NOTES:

1. REFRIGERANT LINESET SIZED PER MANUFACTURER INSTRUCTIONS TO/FROM INDOOR AIR HANDLING UNIT AHU-1 LOCATED IN NEW MECHANICAL ROOM M102.
2. CONNECT TO EXISTING COOLING COIL CONDENSATE DRAIN LINE WITH SAME SIZE PIPE. ROUTE AND SLOPE NEW PIPE TOWARDS AND SPILL TO NEAREST ROOF DRAIN.
3. SIDEWALL DUCT PENETRATION INTO ATTIC SPACE. COORDINATE PENETRATION LOCATION WITH ROOF TRUSS SPACING. INSULATE ALL EXTERIOR DUCT PER SPECIFICATION 230700 AND MECHANICAL DETAILS.
4. PROVIDE COOLING COIL CONDENSATE DRAIN FROM NEW ROOFTOP AIR HANDLING UNIT RTU-1. PIPE SIZE SHALL NOT BE LESS THAN MANUFACTURER OUTLET CONNECTION SIZE. ROUTE AND SLOPE PIPE TOWARDS AND SPILL TO NEAREST ROOF DRAIN.
5. COORDINATE RTU-1 AND EF-2 LOCATIONS TO ENSURE PROPER MANUFACTURER SERVICE CLEARANCES.
6. REFRIGERANT LINESET SIZED PER MANUFACTURER INSTRUCTIONS TO/FROM INDOOR WALL-MOUNTED UNIT DSS-1 LOCATED IN IT M103.
7. 10"x10" SUPPLY DUCT FROM UPPER LEVEL THRU EXTERIOR WALL AND DOWN THRU EXTENDED ELEVATOR ENCLOSURE. SEE SECTION 2 ON SHEET M101.

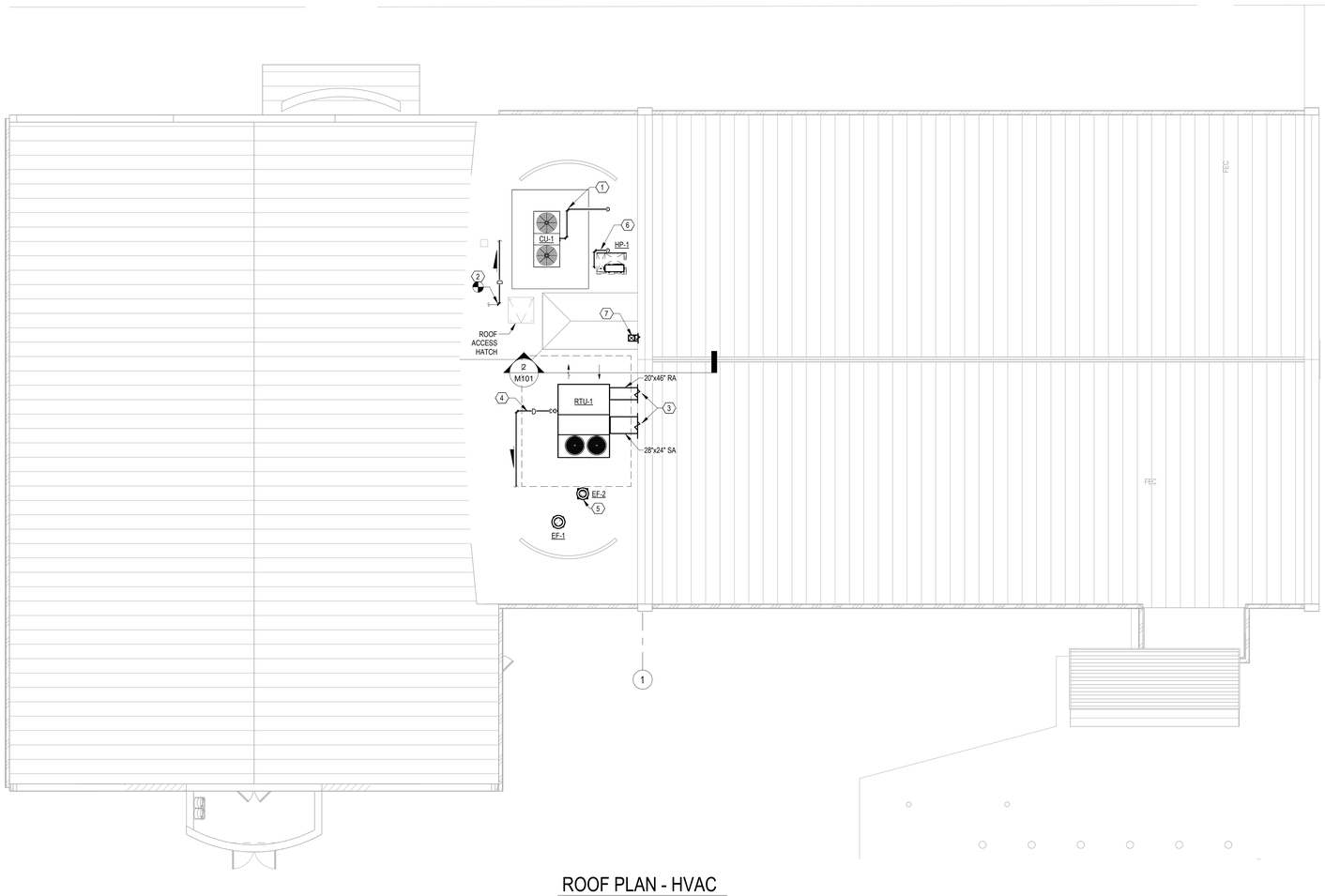

ROOF PLAN - HVAC
SCALE: 1/8" = 1'-0"

SCALE: 1/8" = 1' - 0"

SPECTRUM DESIGN
architects | engineers

Plaza Suite 1
10 Church Avenue, SE
Roanoke, VA 24011

540.342.6001
spectrumpc.com

LAWRENCE PERRY & ASSOCIATES
Consulting Engineers

15 E Salem Avenue SE, Suite 101
Roanoke, Virginia 24011

Ph: (540) 342-1816
Fax: (540) 344-3410

Comm. No.: 25114

© Lawrence Perry and Associates, Inc.

RENOVATIONS & ADDITIONS TO

BEDFORD COUNTY SHERIFF'S OFFICE

SPECTRUM DESIGN PROJECT NO.: **24112**

COMMONWEALTH OF VIRGINIA
04/13/2026
RICHARD C. HUGHES
Lic. No. 045688
PROFESSIONAL ENGINEER

PROJ. MGR.: **RCH**
CHECKED BY: **JCW**
DRAWN BY: **RMP**

SHEET ISSUE DATE:
04.13.2026

PROJECT PHASE:
CONSTRUCTION DOCUMENTS

SHEET REVISIONS:

PLAN NORTH N SITE NORTH

SHEET NAME:
ROOF PLAN - HVAC

SHEET NUMBER:
M201

ORIGINAL SIZE: ARCH E1 (30X42) | 3/4/2026 12:55:01 PM
C:\Users\rmp\Documents\25114 - Bedford Sheriff's Office - MECH - R26_rcjuAAWTf.rvt

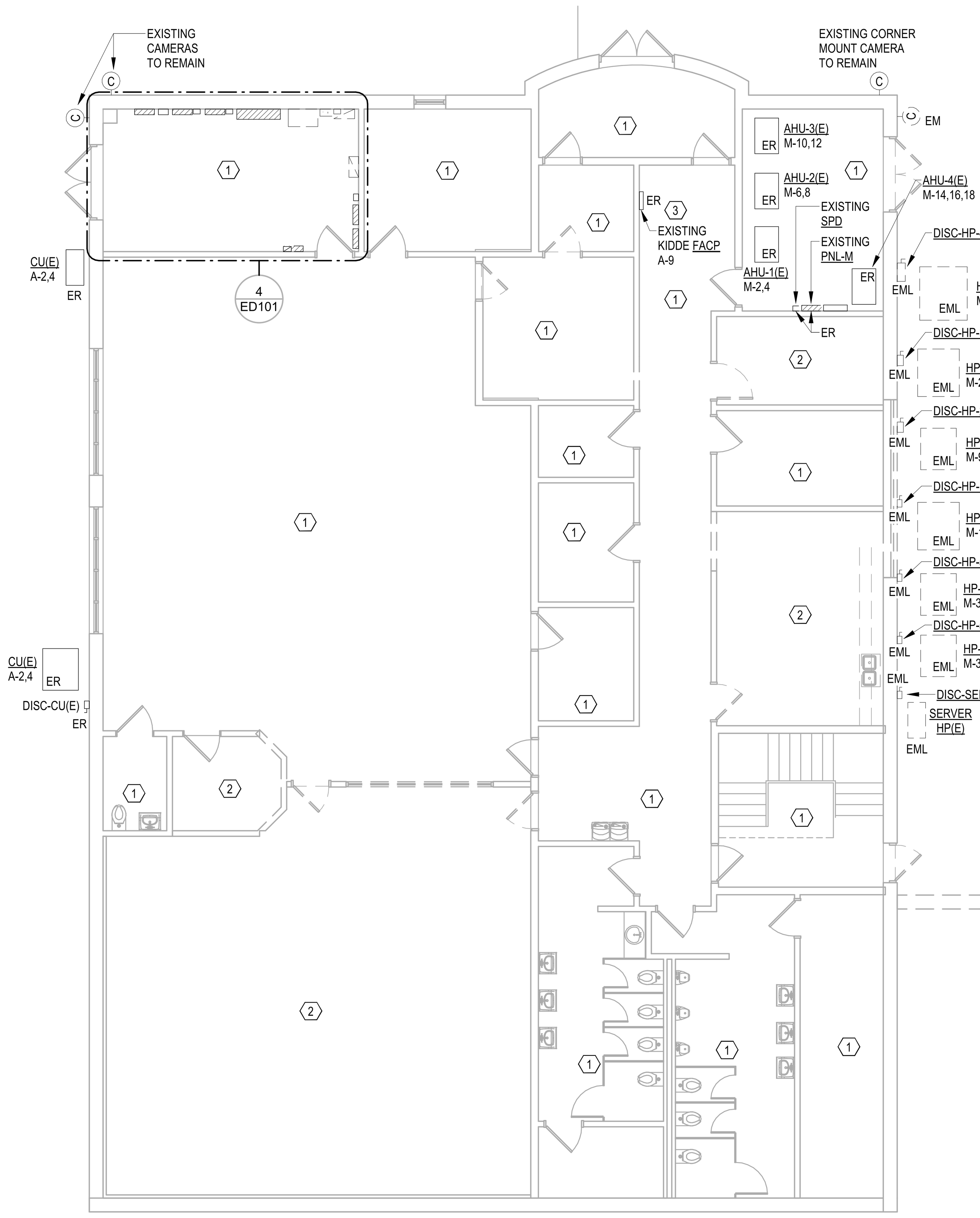

GROUND FLOOR DEMOLITION PLAN - ELECTRICAL

2 ED101 SCALE: 1/8" = 1'-0"

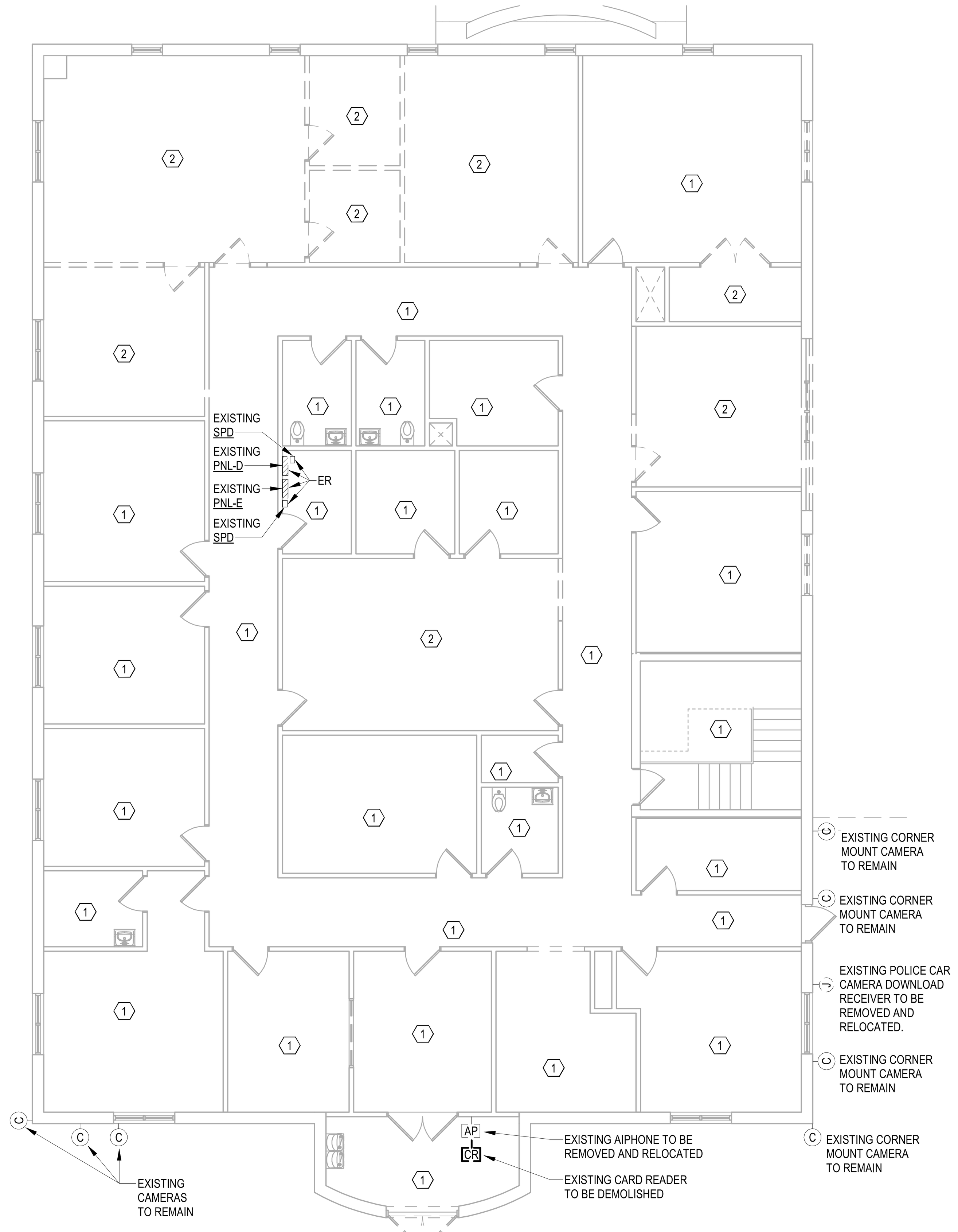

FIRST FLOOR DEMOLITION PLAN - ELECTRICAL

1 ED101 SCALE: 1/8" = 1'-0"

PLAN NOTES: ⟨#⟩

1. ALL EXISTING LIGHTING, LIGHTING CONTROLS, RECEPTACLES, FIRE ALARM DEVICES, AND LOW-VOLTAGE COMMUNICATION DEVICES IN THIS ROOM/SPACE SHALL REMAIN AS INSTALLED.
2. ALL EXISTING LIGHTING, LIGHTING CONTROLS, RECEPTACLES, AND FIRE ALARM DEVICES IN THIS ROOM/SPACE SHALL BE DEMOLISHED. ALL EXISTING LOW-VOLTAGE COMMUNICATION DEVICES IN THIS ROOM/SPACE SHALL BE REMAIN AS INSTALLED, UNLESS NOTED OTHERWISE BY OWNER. RETAIN EXISTING LIGHTING CIRCUIT TO CONNECT TO NEW LIGHTING AND LIGHTING CONTROLS IN THE NEW ROOM(S)/SPACE(S). RETAIN EXISTING SLC OR NAC CIRCUIT TO CONNECT TO NEW FIRE ALARM DEVICES IN THE NEW ROOM(S)/SPACE(S).
3. EXISTING FACP TO BE DISCONNECTED FROM EXISTING CIRCUIT A-9 AND FED FROM NEW CIRCUIT LS-3.

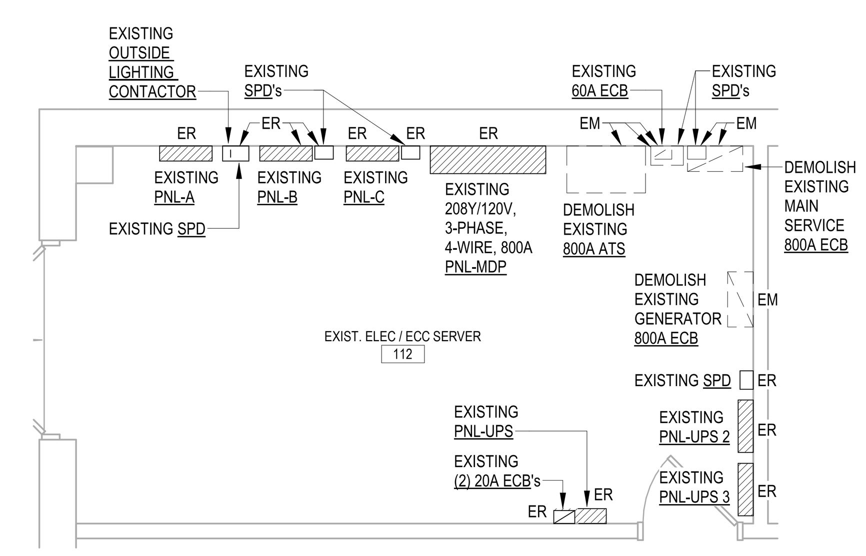

ENLARGED EXISTING ELEC/ECC SERVER 112 - DEMOLITION

4 ED101 ED101 SCALE: 1/4" = 1'-0"

GENERAL DEMOLITION NOTES:

1. SCOPE: THE SCOPE OF ELECTRICAL DEMOLITION IS DEFINED IN THE FOLLOWING NOTES AND IN LIMITED FASHION ON THE DRAWINGS; THE DRAWINGS ARE ONLY INTENDED TO BE A PARTIAL REPRESENTATION OF THE ACTUAL DEMOLITION WORK REQUIRED. THESE NOTES ONLY APPLY TO THE AREAS OF RENOVATION. IN GENERAL, THE DEMOLITION SCOPE IS THE REMOVAL OF ALL EXISTING ELECTRICAL SYSTEMS IN THE AREAS OF RENOVATION, EXCEPT AS NOTED OTHERWISE IN THESE NOTES AND ON THE DRAWINGS.
2. ELECTRICAL SERVICE: THE EXISTING ELECTRICAL SERVICE SHALL BE DEMOLISHED, BUT ONLY AFTER A NEW ELECTRICAL SERVICE HAS BEEN INSTALLED AND CONNECTED TO NEW SERVICE ENTRANCE RATED ATS's AND OTHER NEW ELECTRICAL GEAR AND THEN RECONNECTED BACK TO MODIFIED EXISTING 800A, 208V, 3-PHASE ELECTRICAL DISTRIBUTION PANEL IN THE EXISTING BUILDING.
3. GENERATOR: THE EXISTING GENERATOR SHALL BE DEMOLISHED, BUT ONLY AFTER A NEW GENERATOR HAS BEEN INSTALLED AND CONNECTED TO NEW SERVICE ENTRANCE RATED ATS's, AND OTHER NEW ELECTRICAL GEAR AND THEN RECONNECTED BACK TO MODIFIED EXISTING 800A, 208V, 3-PHASE ELECTRICAL DISTRIBUTION PANEL IN THE EXISTING BUILDING.
4. PANELBOARDS: THE EXISTING PANELBOARDS IN THE EXISTING BUILDING SHALL REMAIN AS INSTALLED, UNLESS NOTED OTHERWISE. NEW PANELS SHALL ALSO BE PROVIDED FOR THE NEW ADDITION.
5. DEVICES (RECEPTACLES, LIGHTING CONTROLS, ETC.):
   - A. WHERE DEVICES ARE NOTED TO BE DEMOLISHED:
     - a. FLUSH MOUNTED DEVICES TO BE REMOVED (NOT REPLACED IN PLACE) OCCUR IN EXISTING WALLS TO REMAIN: REMOVE DEVICE; REMOVE COVER PLATE; REMOVE WIRES BACK TO UP STREAM DEVICE, HOMERUN JUNCTION BOX, OR PANELBOARD. PROVIDE NEW BLANK COVER PLATE, WHICH SHALL MATCH COVER PLATES FOR NEW WORK OR IF NO NEW WORK THEN SHALL MATCH EXISTING COVER PLATES.
       - 1. WHERE EXISTING WIRING AT DEVICE IS UP STREAM OF OTHER DOWN STREAM DEVICES, REWORK THE EXISTING WIRING TO REMOVE THE DEVICE, BUT TO MAINTAIN CIRCUIT CONTINUITY TO THE DOWN STREAM DEVICES. PROVIDE ALL REQUIRED MATERIALS TO REWORK THE EXISTING WIRING.
     - b. FLUSH MOUNTED DEVICES TO BE REMOVED THAT OCCUR IN EXISTING WALLS TO BE REMOVED: REMOVE DEVICE; REMOVE COVER PLATE; REMOVE WIRES BACK TO UP STREAM DEVICE, HOMERUN JUNCTION BOX, OR PANELBOARD; REMOVE ASSOCIATED BOX; AND REMOVE CONDUIT. ANY CONDUIT NOT ACCESSIBLE SHALL BE CUT AND LEFT ABANDONED IN THE EXISTING WALLS.
       - 1. WHERE THE EXISTING DEVICE IS THE FIRST DEVICE THAT THE HOMERUN CIRCUIT LANDS TO AND THEN FEEDS OTHER DOWN STREAM DEVICES:
         - A. WHERE THE EXISTING HOMERUN CIRCUIT IS ROUTED OVERHEAD: CAPTURE THE EXISTING HOMERUN CIRCUIT (CONDUIT AND WIRING) OVERHEAD BEFORE IT TURNS DOWN INTO THE EXISTING WALL BEING DEMOLISHED.
           - a. WHERE THERE IS AN EXISTING HOMERUN JUNCTION BOX IN THE CEILING BEFORE IT TURNS DOWN TO THE FIRST DEVICE: REMOVE THE CONDUIT AND WIRING BETWEEN THE FIRST DEVICE AND THE HOME RUN JUNCTION BOX. THEN PROVIDE NEW CONDUIT AND WIRING (TO MATCH EXISTING) FROM THE EXISTING HOMERUN JUNCTION BOX TO THE NEXT DEVICE DOWN STREAM OF THE FIRST DEVICE (THAT WAS REMOVED) AND RECONNECT THE WIRING.
           - b. WHERE THE HOMERUN CIRCUIT EXTENDS FROM THE PANEL ALL THE WAY TO THE FIRST DEVICE: PULL OUT THE EXISTING WIRING FROM THE EXISTING CONDUIT. CUT THE CONDUIT UP ABOVE THE ACCESSIBLE CEILING SPACE. PROVIDE A NEW JUNCTION BOX ON THE END OF THE EXISTING CONDUIT. PROVIDE NEW CONDUIT AND WIRING (TO MATCH EXISTING) FROM THE NEW HOMERUN JUNCTION BOX TO THE NEXT DEVICE DOWN STREAM OF THE FIRST DEVICE (THAT WAS REMOVED) AND RECONNECT THE WIRING. MAINTAIN CIRCUIT CONTINUITY TO DOWN STREAM DEVICES.
           - c. WHERE EXISTING WALLS ARE NOT ACCESSIBLE TO RUN NEW HARD CONDUIT DOWN WITHIN THE EXISTING WALLS PROVIDE AND UTILIZE MC CABLE TO FISH DOWN WITHIN THE EXISTING WALLS. WHERE EXISTING WALLS AND EXISTING RECESSED WALL BOXES DO NOT ALLOW FOR HARD CONDUIT OR MC CABLE THEN PROVIDE SURFACE RACEWAY (TWO PIECE SINGLE-CHANNEL) TO BE ROUTED FROM THE CEILING DOWN TO THE NEXT DEVICE DOWN STREAM. PROVIDE A SURFACE MOUNTED BOX TO COVER THE EXISTING RECESSED WALL BOX, WHERE SIZE OF SURFACE BOX WILL ACCOMMODATE THE NEW DEVICE AND BE ABLE TO CONNECT TO THE EXISTING WIRING WITHIN THE EXISTING RECESSED WALL BOX. **COORDINATE WITH ARCHITECT FOR ANY LOCATIONS THAT SURFACE RACEWAY WILL BE USED.** ALSO COORDINATE ALL SURFACE RACEWAY AROUND ANY NEW OR EXISTING EQUIPMENT, DEVICES, MARKERBOARDS, SMARTBOARDS, CABINETS, ETC. ON THE EXISTING WALLS (NOTE THAT THIS COULD RESULT IN LONGER RUNS OF SURFACE RACEWAY TO AVOID THESE OBSTACLES).
         - B. WHERE THE EXISTING HOMERUN CIRCUIT IS ROUTED BELOW THE SLAB: REMOVE THE WIRING BETWEEN THE FIRST DEVICE AND EITHER THE FIRST HOME RUN JUNCTION BOX ABOVE THE SLAB OR THE PANELBOARD. CUT CONDUIT FLUSH WITH FINISHED FLOOR AND FILL WITH GROUT AND FINISH TO MATCH EXISTING FLOOR SURFACE. PROVIDE NEW CONDUIT AND WIRING (TO MATCH EXISTING) FROM EITHER THE FIRST EXISTING HOMERUN JUNCTION BOX ABOVE THE SLAB OR FROM THE EXISTING PANELBOARD TO THE NEXT DEVICE DOWN STREAM OF THE FIRST DEVICE (THAT WAS REMOVED) AND RECONNECT THE WIRING. MAINTAIN CIRCUIT CONTINUITY TO DOWN STREAM DEVICES.
           - a. WHERE EXISTING WALLS ARE NOT ACCESSIBLE TO RUN NEW HARD CONDUIT DOWN WITHIN THE EXISTING WALLS PROVIDE AND UTILIZE MC CABLE TO FISH DOWN WITHIN THE EXISTING WALLS. WHERE EXISTING WALLS AND EXISTING RECESSED WALL BOXES DO NOT ALLOW FOR HARD CONDUIT OR MC CABLE THEN PROVIDE SURFACE RACEWAY (TWO PIECE SINGLE-CHANNEL) TO BE ROUTED FROM THE CEILING DOWN TO THE NEXT DEVICE DOWN STREAM. PROVIDE A SURFACE MOUNTED BOX TO COVER THE EXISTING RECESSED WALL BOX, WHERE SIZE OF SURFACE BOX WILL ACCOMMODATE THE NEW DEVICE AND BE ABLE TO CONNECT TO THE EXISTING WIRING WITHIN THE EXISTING RECESSED WALL BOX. **COORDINATE WITH ARCHITECT FOR ANY LOCATIONS THAT SURFACE RACEWAY WILL BE USED.** ALSO COORDINATE ALL SURFACE RACEWAY AROUND ANY NEW OR EXISTING EQUIPMENT, DEVICES, MARKERBOARDS, SMARTBOARDS, CABINETS, ETC. ON THE EXISTING WALLS (NOTE THAT THIS COULD RESULT IN LONGER RUNS OF SURFACE RACEWAY TO AVOID THESE OBSTACLES).
       - 2. WHERE THE EXISTING DEVICE IS IN BETWEEN (UP STEAM AND DOWN STREAM) DEVICES: REMOVE THE WIRING BETWEEN THE REMOVED DEVICE AND THE DEVICES UP STREAM AND DOWN STREAM. REMOVE PORTIONS OF EXISTING CONDUIT THAT ARE EXPOSED. ANY CONDUIT NOT ACCESSIBLE SHALL BE CUT AND LEFT ABANDONED IN THE EXISTING WALLS. PROVIDE NEW CONDUIT AND WIRING (TO MATCH EXISTING) FROM THE UP STREAM DEVICE UP TO THE CEILING AND THEN BACK DOWN TO THE NEXT DOWN STREAM DEVICE AND RECONNECT THE WIRING. OR UTILIZE THE EXISTING HOMERUN JUNCTION BOX TO REFEED THE NEXT DOWN STREAM DEVICE AND RECONNECT THE WIRING. MAINTAIN CIRCUIT CONTINUITY BETWEEN UP STREAM AND DOWN STREAM DEVICES.
         - A. WHERE EXISTING WALLS ARE NOT ACCESSIBLE TO RUN NEW HARD CONDUIT DOWN WITHIN THE EXISTING WALLS PROVIDE AND UTILIZE MC CABLE TO FISH DOWN WITHIN THE EXISTING WALLS. WHERE EXISTING WALLS AND EXISTING RECESSED WALL BOXES DO NOT ALLOW FOR HARD CONDUIT OR MC CABLE THEN PROVIDE SURFACE RACEWAY (TWO PIECE SINGLE-CHANNEL) TO BE ROUTED FROM THE CEILING DOWN TO THE NEXT DEVICE DOWN STREAM. PROVIDE A SURFACE MOUNTED BOX TO COVER THE EXISTING RECESSED WALL BOX, WHERE SIZE OF SURFACE BOX WILL ACCOMMODATE THE NEW DEVICE AND BE ABLE TO CONNECT TO THE EXISTING WIRING WITHIN THE EXISTING RECESSED WALL BOX. **COORDINATE WITH ARCHITECT FOR ANY LOCATIONS THAT SURFACE RACEWAY WILL BE USED.** ALSO COORDINATE ALL SURFACE RACEWAY AROUND ANY NEW OR EXISTING EQUIPMENT, DEVICES, MARKERBOARDS, SMARTBOARDS, CABINETS, ETC. ON THE EXISTING WALLS (NOTE THAT THIS COULD RESULT IN LONGER RUNS OF SURFACE RACEWAY TO AVOID THESE OBSTACLES).
       - 3. WHERE THE EXISTING DEVICE IS DOWNSTREAM (AT THE END) OF ALL UPSTREAM DEVICES: REMOVE THE WIRING BETWEEN THE REMOVED DEVICE AND THE UP STREAM DEVICE. REMOVE PORTIONS OF EXISTING CONDUIT THAT ARE EXPOSED. ANY CONDUIT NOT ACCESSIBLE SHALL BE CUT AND LEFT ABANDONED IN THE EXISTING WALLS.
     - c. SURFACE MOUNTED DEVICES TO BE REMOVED OCCUR ON EXISTING WALLS TO REMAIN: REMOVE DEVICE; COVERPLATE; WIRES BACK TO UPSTREAM DEVICE, HOMERUN JUNCTION BOX, OR PANELBOARD; ASSOCIATED EXPOSED BOXES; CONDUIT AND SURFACE RACEWAY.
       - 1. WHERE THE EXISTING DEVICE IS THE FIRST DEVICE THAT THE HOMERUN CIRCUIT LANDS TO AND THEN FEEDS OTHER DOWN STREAM DEVICES: REFER TO 5.A.b.1.A & 5.A.b.1.B ABOVE FOR SIMILAR DIRECTION.
       - 2. WHERE THE EXISTING DEVICE IS IN BETWEEN (UP STEAM AND DOWN STREAM) DEVICES: REFER TO 5.A.b.2 ABOVE FOR SIMILAR DIRECTION.
       - 3. WHERE THE EXISTING DEVICE IS DOWNSTREAM (AT THE END) OF ALL UPSTREAM DEVICES: REFER TO 5.A.b.3 ABOVE FOR SIMILAR DIRECTION.
     - d. FLOOR DEVICES TO BE REMOVED OCCURRING ON EXISTING FLOORS TO REMAIN: REMOVE DEVICE; FLOOR BOX; WIRES BACK TO UPSTREAM DEVICE, HOMERUN JUNCTION BOX, OR PANELBOARD; ASSOCIATED EXPOSED BOXES; CONDUIT AND SURFACE RACEWAY. FILL HOLE WITH GROUT AND FINISH TO MATCH EXISTING FLOOR SURFACE.
       - 1. WHERE THE EXISTING DEVICE IS THE FIRST DEVICE THAT THE HOMERUN CIRCUIT LANDS TO AND THEN FEEDS OTHER DOWN STREAM DEVICES: CUT CONDUIT ON BOTH SIDES OF THE FLOOR BOX. REMOVE THE FLOOR BOX. JOIN BOTH ENDS OF THE EXISTING CONDUIT WITH A NEW PIECE OF CONDUIT (TO MATCH EXISTING). REFER TO 5.A.b.1.A & 5.A.b.2.B ABOVE FOR SIMILAR DIRECTION ON WIRING.
       - 2. WHERE THE EXISTING DEVICE IS IN BETWEEN (UP STEAM AND DOWN STREAM) DEVICES: CUT CONDUIT ON BOTH SIDES OF THE FLOOR BOX. REMOVE THE FLOOR BOX. JOIN BOTH ENDS OF THE EXISTING CONDUIT WITH A NEW PIECE OF CONDUIT (TO MATCH EXISTING). REFER TO 5.A.b.2 ABOVE FOR SIMILAR DIRECTION ON THE WIRING.
       - 3. WHERE THE EXISTING DEVICE IS DOWNSTREAM (AT THE END) OF ALL UPSTREAM DEVICES: CUT CONDUIT AND CAP THE END OF THE CONDUIT BELOW THE SLAB. REFER TO 5.A.b.3 ABOVE FOR SIMILAR DIRECTION.
     - e. WHERE UTILIZING AN EXISTING WALL BOX FOR A NEW DEVICE AND THE EXISTING WALL BOX DO NOT COMPLY WITH ADA MOUNTING HEIGHTS: EITHER MOVE THE EXISTING RECESSED WALL BOX DOWN TO THE CORRECT MOUNTING HEIGHT, OR PROVIDE A BLANK COVER PLATE ON THE EXISTING RECESSED WALL BOX AND THEN INSTALL A NEW RECESSED WALL BOX FOR THE NEW LIGHTING CONTROLS, OR PROVIDE A SURFACE MOUNTED BOX TO COVER THE EXISTING RECESSED WALL BOX WHERE SIZE OF SURFACE MOUNTED BOX WILL ACCOMMODATE THE LIGHTING CONTROLS AND BE ABLE TO CONNECT TO THE EXISTING LINE-VOLTAGE OR NEW LOW-VOLTAGE WIRING WITHIN THE EXISTING RECESSED WALL BOX.
       - 1. WHERE EXISTING WALLS ARE NOT ACCESSIBLE TO RUN NEW HARD CONDUIT DOWN WITHIN THE EXISTING WALLS PROVIDE AND UTILIZE MC CABLE TO FISH DOWN WITHIN THE EXISTING WALLS. WHERE EXISTING WALLS AND EXISTING RECESSED WALL BOXES DO NOT ALLOW FOR HARD CONDUIT OR MC CABLE THEN PROVIDE SURFACE RACEWAY (TWO PIECE SINGLE-CHANNEL) TO BE ROUTED FROM THE CEILING DOWN TO THE NEXT DEVICE DOWN STREAM. **COORDINATE WITH ARCHITECT FOR ANY LOCATIONS THAT SURFACE RACEWAY WILL BE USED.** ALSO COORDINATE ALL SURFACE RACEWAY AROUND ANY NEW OR EXISTING EQUIPMENT, DEVICES, MARKERBOARDS, SMARTBOARDS, UPPER CABINETS, ETC. ON THE EXISTING WALLS (NOTE THAT THIS COULD RESULT IN LONGER RUNS OF SURFACE RACEWAY TO AVOID THESE OBSTACLES).

GENERAL DEMOLITION NOTES:

6. RECEPTACLES: ALL EXISTING RECEPTACLES AND BRANCH CIRCUITS TO THE EXISTING RECEPTACLES SHALL REMAIN AS INSTALLED IN THE EXISTING BUILDING AREAS NOT BEING RENOVATED. IN THE AREA OF RENOVATIONS ALL EXISTING RECEPTACLES SHALL BE DEMOLISHED AND REPLACED WITH NEW. NEW RECEPTACLES SHALL BE PROVIDED IN THE NEW BUILDING ADDITION. REFER TO DEVICES ABOVE FOR ADDITIONAL DEMOLITION NOTES.
7. LIGHTING CONTROLS: ALL EXISTING INTERIOR LIGHTING CONTROLS AND BRANCH CIRCUITS TO THE EXISTING INTERIOR LIGHTING CONTROLS SHALL REMAIN AS INSTALLED IN THE EXISTING BUILDING AREAS NOT BEING RENOVATED. IN THE AREA OF RENOVATIONS ALL EXISTING INTERIOR LIGHTING CONTROLS SHALL BE DEMOLISHED AND REPLACED WITH NEW. ALL EXISTING EXTERIOR LIGHTING CONTROLS AND BRANCH CIRCUITS TO THE EXISTING EXTERIOR LIGHTING CONTROLS SHALL REMAIN AS INSTALLED, UNLESS NOTED OTHERWISE ON THE DEMOLITION PLANS OR NEW WORK PLANS. NEW LIGHTING CONTROLS SHALL BE PROVIDED IN THE NEW BUILDING ADDITION.
   - A. WHERE NEW LIGHTING CONTROLS ARE LOW-VOLTAGE, REMOVE THE EXISTING LINE-VOLTAGE WIRING AND INSTALL LOW-VOLTAGE WIRING PER APPROVED LIGHTING CONTROL MANUFACTURER'S WIRING REQUIREMENTS.
     - a. WHERE EXISTING LINE-VOLTAGE WIRING WITHIN THE WALL BOX IS UP STREAM OF OTHER DOWN STREAM DEVICES REFER TO DEVICES ABOVE FOR A RESOLUTION TO REFEED THE EXISTING DOWN STREAM DEVICES. MAINTAIN CIRCUIT CONTINUITY BETWEEN UP STREAM AND DOWN STREAM DEVICES.
8. INTERIOR LIGHTING: ALL EXISTING INTERIOR LIGHTING AND BRANCH CIRCUITS TO THE EXISTING INTERIOR LIGHTING SHALL REMAIN AS INSTALLED IN THE EXISTING BUILDING AREAS NOT BEING RENOVATED. IN THE AREA OF RENOVATIONS ALL EXISTING INTERIOR LIGHTING CONTROLS SHALL BE DEMOLISHED AND REPLACED WITH NEW. NEW INTERIOR LIGHTING SHALL BE PROVIDED IN THE NEW BUILDING ADDITION.
   - A. PROVIDE NEW CONDUIT AND WIRING ALONG WITH ALL OTHER REQUIRED MATERIALS NECESSARY TO RECONNECT THE NEW INTERIOR LIGHT FIXTURES TO ANY NOTED EXISTING TO REMAIN LIGHTING BRANCH CIRCUITS VIA THE NEW LIGHTING CONTROLS
9. EXTERIOR LIGHTING: ALL EXISTING EXTERIOR LIGHT FIXTURES AND BRANCH CIRCUITS SHALL REMAIN AS INSTALLED, UNLESS NOTED OTHERWISE ON THE DEMOLITION PLANS OR NEW WORK PLANS. NEW EXTERIOR LIGHTING SHALL BE PROVIDED FOR THE NEW BUILDING ADDITION.
   - A. PROVIDE NEW CONDUIT AND WIRING ALONG WITH ALL OTHER REQUIRED MATERIALS NECESSARY TO CONNECT THE NEW EXTERIOR LIGHT FIXTURES MOUNTED ON THE EXTERIOR WALL OF THE BUILDING OR ON THE BOTTOM OF THE EXISTING CANOPIES TO THE NEW LIGHTING BRANCH CIRCUITS VIA THE NEW LIGHTING CONTROLS.
   - B. PROVIDE NEW CONDUIT AND WIRING ALONG WITH ALL OTHER REQUIRED MATERIALS NECESSARY TO CONNECT THE EXISTING EXTERIOR POLE LIGHT FIXTURES TO THE NEW LIGHTING BRANCH CIRCUITS VIA THE NEW LIGHTING CONTROLS.
10. FIRE ALARM SYSTEM: THE EXISTING FIRE ALARM SYSTEM SHALL REMAIN AS INSTALLED IN THE EXISTING BUILDING AREAS NOT BEING RENOVATED, UNLESS NOTED OTHERWISE. DEMOLISH OR RELOCATED EXISTING FIRE ALARM DEVICES IN THE AREAS OF RENOVATIONS. PROVIDE NEW FIRE ALARM SYSTEM IN NEW BUILDING ADDITION AND TIE THE NEW FIRE ALARM SYSTEM TO THE EXISTING FIRE ALARM SYSTEM.
    - A. THE EXISTING FIRE ALARM SYSTEM SHALL REMAIN OPERATIONAL DURING THE RENOVATIONS. PROTECT ALL EXISTING AND NEW DEVICES LOCATED IN THE CONSTRUCTION AREA FROM BEING DAMAGED. NOTE SOME SLC'S AND NAC'S MAY FEED EXISTING FIRE ALARM DEVICES OUTSIDE THE AREA OF RENOVATION WHICH COULD REQUIRED REWORKING SOME OF THE EXISTING WIRING TO MAINTAIN THE OPERATION OF THOSE EXISTING FIRE ALARM DEVICES. PROVIDE TEMPORARY WIRING (TO MATCH EXISTING) AS REQUIRED TO MAINTAIN SYSTEM OPERATION WHEN AN AREA IS DISCONNECTED FOR RENOVATION.
    - B. CONNECT (TIE) THE NEW FIRE ALARM SYSTEM CONTROL PANEL (FOR THE NEW BUILDING ADDITION) TO THE EXISTING FIRE ALARM SYSTEM CONTROL PANEL (IN THE MAIN OFFICE). THIS CONNECTION WILL ALLOW THE EXISTING FIRE ALARM SYSTEM CONTROL PANEL TO MONITOR BOTH THE EXISTING BUILDING AND NEW BUILDING ADDITION. MAINTAIN EXISTING CENTRAL MONITORING STATION TO EXISTING FIRE ALARM CONTROL PANEL.
      - a. WHERE EXISTING FIRE ALARM CONTROL PANEL DOES NOT HAVE THE CAPACITY OR ABILITY TO ADD AND MONITOR THE NEW FIRE ALARM SYSTEM IN THE NEW BUILDING ADDITION THEN REPLACE THE EXISTING FIRE ALARM CONTROL IN THE EXISTING BUILDING'S MAIN OFFICE WITH A NEW FIRE ALARM CONTROL PANEL THAT IS CAPABLE OF MONITORING THE EXISTING FIRE ALARM SYSTEM AND THE NEW FIRE ALARM SYSTEM AND HAS CAPACITY FOR FUTURE EXPANSION (SUCH AS FUTURE RENOVATIONS IN THE EXISTING BUILDING).
        - WHERE A NEW FIRE ALARM CONTROL PANEL IN THE EXISTING BUILDING'S MAIN OFFICE IS REQUIRED. MAINTAIN THE EXISTING FIRE ALARM CONTROL PANEL TILL THE NEW FIRE ALARM CONTROL PANEL IS INSTALLED AND OPERATIONAL BEFORE DEMOLISHING THE EXISTING FIRE ALARM CONTROL PANEL.
11. LOW-VOLTAGE COMMUNICATION SYSTEMS: THE EXISTING AND NEW LOW-VOLTAGE COMMUNICATION SYSTEMS SHALL BE AS DESIGNED BY THE OWNER'S LOW-VOLTAGE CONTRACTOR/INSTALLER.
12. CONDUIT: WHERE EXISTING CONDUIT IS EXPOSED DUE TO DEMOLITION OF WALLS, CONDUIT SHALL BE REMOVED, UNLESS INDICATED TO REMAIN OR NECESSARY TO MAINTAIN SERVICE TO EXISTING ITEMS TO REMAIN. WHERE CONDUIT RISES FROM FLOOR TO FEED REMOVED ITEMS, CUT CONDUIT FLUSH WITH FLOOR AND FILL IT WITH GROUT. FINISH TO MATCH FLOOR SURFACE. ALL ACCESSIBLE UNUSED CONDUIT SHALL BE REMOVED; ALL INACCESSIBLE UNUSED CONDUIT SHALL BE ABANDONED. ALL CONDUIT TO NEW DEVICES AND EQUIPMENT SHALL BE NEW, UNLESS NOTED OTHERWISE.
13. WIRING: ALL WIRING TO DEMOLISHED DEVICES AND EQUIPMENT SHALL BE REMOVED, UNLESS NOTED OTHERWISE. ALL EXISTING WIRING TO EXISTING-TO-REMAIN DEVICES AND EQUIPMENT SHALL REMAIN, UNLESS NOTED OTHERWISE. ALL ACCESSIBLE UNUSED WIRING SHALL BE REMOVED; ALL INACCESSIBLE UNUSED WIRING SHALL BE CUT AND ABANDONED. ALL WIRING TO NEW DEVICES AND EQUIPMENT SHALL BE NEW, UNLESS NOTED OTHERWISE.
14. MAINTAIN CIRCUIT CONTINUITY AS NECESSARY IN ALL DEMOLITION WORK.
15. THE CONTRACTOR SHALL INFORM THE OWNER'S REPRESENTATIVE OF ELECTRICAL EQUIPMENT REMOVED FROM THE BUILDING. IF THE OWNER DESIRES TO RETAIN EQUIPMENT, THEY WILL REMOVE IT FROM THE SITE. ALL EQUIPMENT NOT RETAINED BY THE OWNER SHALL BECOME PROPERTY OF THE CONTRACTOR AND SHALL BE REMOVED FROM THE SITE. DISPOSAL OF ALL EQUIPMENT CONTAINING HAZARDOUS MATERIALS SHALL BE THE RESPONSIBILITY OF THE CONTRACTOR, AND THE COST OF DISPOSAL SHALL BE INCLUDED.
16. INFORMATION ON DEMOLITION DRAWINGS DOES NOT INDICATE ALL EXISTING EQUIPMENT AND DEVICES. REFER TO ARCHITECTURAL AND MECHANICAL DEMOLITION DRAWINGS FOR ADDITIONAL INFORMATION.
17. THE CONTRACTOR SHALL VISIT THE SITE PRIOR TO SUBMITTING BID AND SHALL VERIFY ALL DEMOLITION REQUIRED. ADDITIONAL COMPENSATION WILL NOT BE ALLOWED FOR DEMOLITION DUE TO CONTRACTOR NOT VISITING SITE AND DETERMINING FULL SCOPE OF DEMOLITION REQUIRED.
18. SEE THE DEMOLITION FLOOR PLANS FOR ADDITIONAL DEMOLITION REQUIREMENTS. ON THE DEMOLITION FLOOR PLANS AND RISERS, ALL DASHED ITEMS SHALL BE REMOVED AND ALL SOLID ITEMS SHALL REMAIN, UNLESS NOTED OTHERWISE. SOME DEMOLITION ITEMS ARE AFFECTED BY ADD ALTERNATES, AS INDICATED IN THE FLOOR PLANS. NEW WORK FLOOR PLANS MAY CONTAIN ADDITIONAL DEMOLITION INFORMATION IN SOME LOCATIONS.

0 2' 4' 8'
SCALE: 1/4" = 1' - 0"
0 4' 8' 16'
SCALE: 1/8" = 1' - 0"

SPECTRUM DESIGN
architects | engineers

Plaza Suite 1
10 Church Avenue, SE
Roanoke, VA 24011
540.342.6001
spectrumpc.com

L P A
LAWRENCE PERRY & ASSOCIATES
Consulting Engineers
15 E Salem Avenue SE, Suite 101
Roanoke, Virginia 24011
Ph: (540) 342-1816
Fax: (540) 344-3410
Comm. No.: 25114
© Lawrence Perry and Associates, Inc.

BEDFORD COUNTY SHERIFF'S OFFICE EXPANSION

SPECTRUM DESIGN PROJECT NO.: **24112**

COMMONWEALTH OF VIRGINIA
05/04/2026
WINSTON A. MATTHEWS
Lic. No. 044469
PROFESSIONAL ENGINEER

PROJ. MGR.: **RCH** CHECKED BY: **WAM** DRAWN BY: **MAS**

SHEET ISSUE DATE:
05.04.2026

PROJECT PHASE:
BID DOCUMENTS

SHEET REVISIONS:

PLAN NORTH N — N SITE NORTH

SHEET NAME:
DEMOLITION FLOOR PLANS - ELECTRICAL

SHEET NUMBER:
ED101

ORIGINAL SIZE : ARCH E1 (30X42) | 5/4/2026 3:39:05 PM
C:\Users\mas\OneDrive - Lawrence Perry And Associates\Documents\25114 - Bedford Sheriff's Office - ELEC - R26_msmithQTWNS.rvt

ELECTRICAL LEGEND - LOW VOLTAGE

MTG. HGT.	SYMBOL	DESCRIPTION
1'-8" TO TOP		COMMUNICATION (DATA AND/OR VOICE) OUTLET, WALL.
1'-8" TO TOP	TV	CABLE TELEVISION OUTLET, WALL.
	W	WIRELESS ACCESS POINT (WAP), CEILING MOUNTED.
8'-0" TO TOP	W	WIRELESS ACCESS POINT (WAP), WALL MOUNTED.
	F1 E,TR,SS, C,U,GF	RECESSED CAST-IN PLACE COMBINATION RECEPTACLE/TELECOM MULTISERVICE FLOOR BOX. NUMBER INDICATES TYPE AS SCHEDULED ON DRAWINGS OR IN SPECIFICATIONS. ALPHA-NUMERIC OR NUMERIC SUBSCRIPT, WHERE SHOWN, INDICATES CIRCUIT. "E" =EMERGENCY RECEPTACLE (RED IN COLOR). "TR" = TAMPER RESISTANT RECEPTACLE. "SS" =SURGE SUPPRESSOR RECEPTACLE. "C" = LOAD CONTROLLED RECEPTACLE VIA OCCUPANCY SENSOR AND RELAY PANEL. "U" = COMBINATION DUPLEX RECEPTACLE AND DUAL USB OUTLETS. "GF" = GROUND FAULT.
	P1 E,TR,SS, C,U,GF	POKE-THRU ASSEMBLY COMBINATION RECEPTACLE/TELECOM MULTISERVICE FLOOR BOX. NUMBER INDICATES TYPE AS SCHEDULED ON DRAWINGS OR IN SPECIFICATIONS. ALPHA-NUMERIC OR NUMERIC SUBSCRIPT, WHERE SHOWN, INDICATES CIRCUIT. "E" = EMERGENCY RECEPTACLE (RED IN COLOR). "TR" = TAMPER RESISTANT RECEPTACLE. "SS" = SURGE SUPPRESSOR RECEPTACLE. "C" = LOAD CONTROLLED RECEPTACLE VIA OCCUPANCY SENSOR AND RELAY PANEL. "U" = COMBINATION DUPLEX RECEPTACLE AND DUAL USB OUTLETS. "GF" = GROUND FAULT.

LOW-VOLTAGE CABLES:

1D:M103 TEXT BESIDE DEVICE INDICATES LOW-VOLTAGE CABLING AS FOLLOWS:
RIGHT OF COLON = ROOM NUMBER OF MDF OR IDF CLOSETS FROM WHICH CABLES ORIGINATE.
LEFT OF COLON = CABLE QUANTITY(S) AND TYPE(S) AS FOLLOWS:

#C = SECURITY CAMERA CABLES: PLENUM RATED UTP CATEGORY 6 WITH PANDUIT MINI-COM CONNECTORS ON BOTH ENDS, UNLESS NOTED OTHERWISE IN DIVISION 27 OR 28 SPECIFICATIONS, ON THE DRAWINGS, OR REQUIRED BY OWNER.

#CR = CARD READER CABLE: PLENUM RATED UTP CATEGORY 6e WITH PANDUIT MINI-COM CONNECTORS ON BOTH ENDS, UNLESS NOTED OTHERWISE IN DIVISION 27 OR 28 SPECIFICATIONS, ON THE DRAWINGS, OR REQUIRED BY OWNER.

#D = DATA CABLE: PLENUM RATED UTP CATEGORY 6 WITH PANDUIT MINI-COM CONNECTORS ON BOTH ENDS, UNLESS NOTED OTHERWISE DIVISION 27 SPECIFICATIONS, ON THE DRAWINGS, OR REQUIRED BY OWNER.

#W = WIRELESS ACCESS POINT CABLE: PLENUM RATED UTP CATEGORY 6 WITH PANDUIT MINI-COM CONNECTORS ON BOTH ENDS, UNLESS NOTED OTHERWISE IN DIVISION 27 SPECIFICATIONS, ON THE DRAWINGS, OR REQUIRED BY OWNER.

#F = FIBER: SINGE MODE FIBER WITH LC CONNECTORS ON BOTH ENDS, UNLESS NOTED OTHERWISE IN DIVISION 27 SPECIFICATIONS, ON THE DRAWINGS, OR REQUIRED BY OWNER.

DEVICES WITH NO ANNOTATIONS SHALL BE EMPTY FOR FUTURE USE.

ELECTRICAL LEGEND - SECURITY

MTG. HGT.	SYMBOL	DESCRIPTION
	C	SECURITY SYSTEM (CCTV SURVEILLANCE) VIDEO CAMERA, CEILING.
8'-0" TO TOP	C	SECURITY SYSTEM (CCTV SURVEILLANCE) VIDEO CAMERA, WALL.
4'-0" TO TOP OF BUTTONS	AP	AIPHONE SECURITY DOOR COMMUNICATION CALL SYSTEM - CALL STATION, SURFACE OR FLUSH WALL MOUNTED.
4'-0" TO TOP	CR	ACCESS CONTROL SYSTEM CARD READER OR KEYPAD, WALL.
4'-0" TO TOP	HC	HANDICAPPED DOOR OPERATOR PADDLE SWITCH, WALL OR BOLLARD MOUNTED.

ELECTRICAL LEGEND - LIGHTING

MTG. HGT.	SYMBOL	DESCRIPTION
	A1	LIGHTING FIXTURE TYPE DESIGNATION.
		LIGHTING FIXTURE, LED, CEILING MOUNTED. SYMBOL SIZE VARIES WITH LIGHTING FIXTURE TYPE.
		LIGHTING FIXTURE, LED, CEILING MOUNTED CONNECTED ON EMERGENCY CIRCUIT. (TYPICAL FOR ALL LIGHTING FIXTURES WITH SOLID FILL OR WITH 'E' DESIGNATION)
		LIGHTING FIXTURE, LED, WALL MOUNTED. SYMBOL SIZE VARIES WITH LIGHTING FIXTURE TYPE. WALL MOUNTED AS NOTED IN LIGHT FIXTURE SCHEDULE OR ON DRAWINGS.
		LIGHTING FIXTURE, LED, CEILING MOUNTED.
		LIGHTING FIXTURE, LED, WALL MOUNTED.
		LED EXIT SIGN, CEILING MOUNTED. SHADED QUADRANT(S) INDICATES FACE(S). PROVIDE ARROWS AS INDICATED ON DRAWINGS.
8'-0" TO BOTTOM, UNO		LED EXIT SIGN, WALL MOUNTED. SHADED QUADRANT(S) INDICATES FACE(S). PROVIDE ARROWS AS INDICATED ON DRAWINGS.
		SITE LIGHTING FIXTURE, POST SINGLE ARM MOUNTED.

ELECTRICAL LEGEND - LIGHTING CONTROLS

MTG. HGT.	SYMBOL	DESCRIPTION
4'-0" TO TOP	\$a WP	GENERAL USE SWITCH, SINGLE POLE. LOWER CASE ALPHABETIC SUBSCRIPT, WHERE SHOWN, INDICATES LOADS CONTROLLED. (TYPICAL FOR ALL SWITCHES). "WP"= WATERPROOF.
4'-0" TO TOP	\$3	GENERAL USE SWITCH, THREE WAY.
4'-0" TO TOP	\$4	GENERAL USE SWITCH, FOUR WAY.
4'-0" TO TOP	\$L1	LOW VOLTAGE LIGHTING CONTROL, WALL-BOX MOUNTED. NUMBER INDICATES TYPE AS SCHEDULED ON DRAWINGS OR IN SPECIFICATIONS.
4'-0" TO TOP	\$L2	LOW VOLTAGE LIGHTING CONTROL,WALL-BOX MOUNTED. NUMBER INDICATES TYPE AS SCHEDULED ON DRAWINGS OR IN SPECIFICATIONS.
4'-0" TO TOP	\$V1	SWITCH WITH INTEGRAL VACANCY SENSOR, WALL-BOX MOUNTED. NUMBER INDICATES TYPE AS SCHEDULED ON DRAWINGS OR IN SPECIFICATIONS.
4'-0" TO TOP	\$OD	COMBINATION 0-10V DIMMER AND OCCUPANCY SENSOR, WALL-BOX MOUNTED. TYPE AS SCHEDULED ON DRAWINGS OR IN SPECIFICATIONS.
	O1	OCCUPANCY SENSOR, CEILING MOUNTED. NUMBER INDICATES TYPE AS SCHEDULED ON DRAWINGS OR IN SPECIFICATIONS.
	V1	VACANCY SENSOR, CEILING MOUNTED. NUMBER INDICATES TYPE AS SCHEDULED ON DRAWINGS OR IN SPECIFICATIONS.
9'-0" TO TOP	O3	OCCUPANCY SENSOR, WALL MOUNTED. NUMBER INDICATES TYPE AS SCHEDULED ON DRAWINGS OR IN SPECIFICATIONS.
8'-0" TO TOP	V3	VACANCY SENSOR, WALL MOUNTED. NUMBER INDICATES TYPE AS SCHEDULED ON DRAWINGS OR IN SPECIFICATIONS.
	PC	PHOTOCELL, EXTERIOR WALL OR SOFFIT MOUNTED.
	GTD20A	COMBINATION BRANCH CIRCUIT EMERGENCY LIGHTING TRANSFER SWITCH (UL 1008) AND AUTOMATIC LOAD CONTROL RELAY (UL 924), UNO. WORKS IN CONJUNCTION WITH AN AUXILIARY GENERATOR TO POWER DESIGNATED LIGHT LOADS UP TO 20 AMPS REGARDLESS OF LOCAL SWITCH POSITION. THE DEVICE SENSES THE LOSS OF NORMAL POWER AND, IN RESPONSE, SWITCHES THE LIGHTING LOAD TO A DESIGNATED EMERGENCY POWER SOURCE. THE DEVICE CAN BE USED TO: 1) TRANSFER A LIGHTING LOAD FROM NORMAL POWER TO GENERATOR POWER WHEN NORMAL POWER IS LOST; 2) BYPASS A WALL SWITCH TO ALLOW GENERATOR SUPPLIED LIGHTING LOADS TO ENERGIZE WHEN NORMAL POWER IS LOST; 3) BYPASS A DIMMING PANEL AND PREVENT BACKFEED TO ALLOW LIGHTING TO ENERGIZE AT FULL BRIGHTNESS WHEN NORMAL POWER IS LOST; AND 4) BYPASS MOST DIMMING CONTROLS USING AN AUXILIARY RELAY CONTACT.

ELECTRICAL LEGEND - POWER DEVICES

MTG. HGT.	SYMBOL	DESCRIPTION
1'-8" TO TOP	SS,H, C,U,WP	RECEPTACLE, DUPLEX, WALL. ALPHA-NUMERIC OR NUMERIC SUBSCRIPT, WHERE SHOWN, INDICATES CIRCUIT. "SS" = SURGE SUPPRESSOR RECEPTACLE. "H" = HORIZONTALLY MOUNTED. "C" = LOAD CONTROLLED RECEPTACLE VIA OCCUPANCY SENSOR AND RELAY PANEL. "U" = COMBINATION DUPLEX RECEPTACLE AND DUAL USB OUTLETS. "WP" = WHILE-IN-USE WEATHER-PROOF COVER PLATE.
		RECEPTACLE, DUPLEX, CEILING. ALPHA-NUMERIC OR NUMERIC SUBSCRIPT. WHERE SHOWN, INDICATES CIRCUIT.
1'-8" TO TOP	H, WP	RECEPTACLE, DUPLEX GFCI, WALL. ALPHA-NUMERIC OR NUMERIC SUBSCRIPT, WHERE SHOWN, INDICATES CIRCUIT. "H" = HORIZONTALLY MOUNTED. "WP" = WHILE-IN-USE WEATHER-PROOF COVER PLATE.
1'-8" TO TOP	SS,C,U,WP	RECEPTACLES, TWO DUPLEX (QUAD) IN A TWO GANG OUTLET BOX, WALL. ALPHA-NUMERIC OR NUMERIC SUBSCRIPT, WHERE SHOWN, INDICATES CIRCUIT. "SS" = SURGE SUPPRESSOR RECEPTACLE. 'C" = LOAD CONTROLLED RECEPTACLE VIA OCCUPANCY SENSOR AND RELAY PANEL. "U" = COMBINATION DUPLEX RECEPTACLE AND DUAL USB OUTLETS. "WP" = WHILE-IN-USE WEATHER-PROOF COVER PLATE.
1'-8" TO TOP	H,WP	RECEPTACLE, SIMPLEX (SINGLE), WALL. ALPHA-NUMERIC OR NUMERIC SUBSCRIPT, WHERE SHOWN, INDICATES CIRCUIT. "H" = HORIZONTALLY MOUNTED. "WP" = WHILE-IN-USE WEATHER-PROOF COVER PLATE.
1'-8" TO TOP		RECEPTACLE, SPECIAL PURPOSE, WALL. NEMA TYPE IS NOTED ON DRAWINGS OR IN SPECIFICATIONS.
1'-8" TO TOP	J	JUNCTION BOX, WALL.
	J	JUNCTION BOX, CEILING.

ELECTRICAL LEGEND - GENERAL

MTG. HGT.	SYMBOL	DESCRIPTION
		NEW CONNECTED TO EXISTING AT THIS POINT.
		EXISTING REMOVED FROM THIS POINT.
	1	PLAN NOTE DESIGNATION.
	1	REVISION DESIGNATION.
	H1-2	CIRCUIT DESIGNATION. DESIGNATION SHOWN INDICATES PANEL NLA1A AND CIRCUIT NUMBER 3.

NOTES (ELECTRICAL LEGEND):

1. THESE ARE STANDARD ELECTRICAL SYMBOLS AND MAY NOT ALL APPEAR ON THE PROJECT DRAWINGS. HOWEVER, WHEREVER AN ELECTRICAL SYMBOL APPEARS ON THE PROJECT DRAWINGS, THE ITEM SHALL BE FURNISHED AND INSTALLED.
2. MOUNTING HEIGHTS NOTE IN THIS SCHEDULE ARE FROM FINISHED FLOOR TO TOP OF OUTLET OR EQUIPMENT, UNO. WHERE THE MOUNTING HEIGHT INDICATED ON THE DRAWINGS IS DIFFERENT FROM THE LEGEND, THE DRAWING TAKES PRECEDENT. SEE DRAWINGS FOR MOUNTING HEIGHTS NOT INDICATED IN THE LEGEND. MOUNTING HEIGHT NOTED ON THE DRAWINGS ARE FROM FINISHED FLOOR TO TOP OF DEVICE.
3. SEE ELECTRICAL ABBREVIATIONS FOR ALPHABETIC SUBSCRIPT WITH SYMBOL, UNO.
4. REFER TO DETAILS ON DRAWINGS FOR ADDITIONAL INFORMATION.

ELECTRICAL LEGEND - RACEWAYS

MTG. HGT.	SYMBOL	DESCRIPTION
		CONDUIT EXPOSED.
		CONDUIT CONCEALED IN OR BELOW FLOOR SLAB OR BELOW GRADE.
		CONDUIT CONCEALED IN WALL OR ABOVE CEILING.
		EXISTING CONDUIT TO BE REMOVED.
		CONDUIT TURNED UP.
		CONDUIT TURNED DOWN.
	2C4	CONDUIT SLEEVES, THROUGH WALL. MOUNT 4" ABOVE HIGHEST ACCESSIBLE CEILING ON EITHER SIDE OF WALL OR MINIMUM 8'-6" AFF WHERE EXPOSED, UNO. FIRST NUMBER INDICATES QUANTITY OF CONDUITS AND SECOND NUMBER INDICATES DIAMETER OF CONDUITS IN INCHES. BUSH CONDUITS AT EACH END.

ELECTRICAL LEGEND - POWER EQUIPMENT

MTG. HGT.	SYMBOL	DESCRIPTION
		GROUND CONNECTION.
1'-0" TO BOTTOM		GROUND BAR. MOUNT WITH LONG DIMENSION HORIZONTAL.
	GR	GROUND ROD.
	M	ELECTRIC MOTOR CONNECTION
6'-0" TO TOP		208/120 VOLT SURFACE OR FLUSH MOUNTED PANELBOARD.
6'-0" TO TOP		240/120 VOLT PANELBOARD
6'-0" TO TOP		480/277 VOLT SURFACE OR FLUSH MOUNTED PANELBOARD.
5'-0" TO TOP	N/3/60	NON-FUSIBLE SAFETY SWITCH, WALL OR EQUIPMENT MOUNTED. NUMBER INDICATES SAFETY SWITCH 3-POLE/60 AMP RATING.
5'-0" TO TOP	F/3/60/45	FUSIBLE SAFETY SWITCH, WALL OR EQUIPMENT MOUNTED. NUMBER INDICATES SAFETY SWITCH 3-POLE/60 AMP RATINGS/45 AMP FUSES.
5'-0" TO TOP	3/60	ENCLOSED CIRCUIT BREAKER, WALL OR EQUIPMENT MOUNTED. NUMBER INDICATES 3-POLE/60 AMP RATING.
5'-0" TO TOP	\$M	TOGGLE SWITCH, HORSEPOWER RATED, WALL OR EQUIPMENT MOUNTED. SINGLE POLE UNLESS SHOWN WITH NUMBER INDICATING NUMBER OF POLES GREATER THAN ONE. "F" DENOTES FLUSH MOUNTED.
5'-0" TO TOP		MANUAL MOTOR STARTER WITH PILOT LIGHT, WALL OR EQUIPMENT MOUNTED. "F" DENOTES FLUSH MOUNTED.
5'-0" TO TOP	3/30/15/0	COMBINATION MAGNETIC MOTOR STARTER AND FUSIBLE SAFETY SWITCH, WALL OR EQUIPMENT MOUNTED. NUMBER INDICATES 3-POLE/30 AMP RATING/15 AMP FUSES/ NEMA SIZE 0 STARTER.
	F1 E,TR,SS, C,U,GF	RECESSED CAST-IN PLACE COMBINATION RECEPTACLE/TELECOM MULTISERVICE FLOOR BOX. NUMBER INDICATES TYPE AS SCHEDULED ON DRAWINGS OR IN SPECIFICATIONS. ALPHA-NUMERIC OR NUMERIC SUBSCRIPT, WHERE SHOWN, INDICATES CIRCUIT. "E" = EMERGENCY RECEPTACLE (RED IN COLOR). "TR" = TAMPER RESISTANT RECEPTACLE. "SS" = SURGE SUPPRESSOR RECEPTACLE. "C" = LOAD CONTROLLED RECEPTACLE VIA OCCUPANCY SENSOR AND RELAY PANEL. "U" = COMBINATION DUPLEX RECEPTACLE AND DUAL USB OUTLETS. "GF" = GROUND FAULT.
	P1 E,TR,SS, C,U,GF	POKE-THRU ASSEMBLY COMBINATION RECEPTACLE/TELECOM MULTISERVICE FLOOR BOX. NUMBER INDICATES TYPE AS SCHEDULED ON DRAWINGS OR IN SPECIFICATIONS. ALPHA-NUMERIC OR NUMERIC SUBSCRIPT, WHERE SHOWN, INDICATES CIRCUIT. "E" = EMERGENCY RECEPTACLE (RED IN COLOR). "TR" = TAMPER RESISTANT RECEPTACLE. "SS" = SURGE SUPPRESSOR RECEPTACLE. "C" = LOAD CONTROLLED RECEPTACLE VIA OCCUPANCY SENSOR AND RELAY PANEL. "U" = COMBINATION DUPLEX RECEPTACLE AND DUAL USB OUTLETS. "GF" = GROUND FAULT.

ELECTRICAL LEGEND - FIRE ALARM

MTG. HGT.	SYMBOL	DESCRIPTION
	ERC, DR S	SMOKE DETECTOR, CEILING. "ERC" = ELEVATOR RECALL. "DR" = DOOR RELEASE.
AS NOTED OR DETAILED	S	SMOKE DETECTOR, WALL.
	S D	SMOKE DETECTOR, DUCT TYPE. COORDINATE EXACT LOCATION WITH MECHANICAL DRAWINGS.
	H	HEAT DETECTOR, CEILING.
AS NOTED OR DETAILED	H	HEAT DETECTOR, WALL.
4'-0" TO TOP	HC	HANDICAPPED DOOR OPERATOR PADDLE SWITCH, WALL OR BOLLARD MOUNTED.
4'-0" TO TOP	F	FIRE ALARM MANUAL PULL STATION, WALL.
8'-0" TO TOP	F 30	FIRE ALARM HORN (AS INDICATED IN SPECIFICATIONS) WITH INTEGRAL VISUAL DEVICE, WALL. NUMBER INDICATES VISUAL DEVICE MINIMUM CANDELA RATING.
8'-0" TO TOP	F 30	FIRE ALARM VISUAL DEVICE, WALL. NUMBER INDICATES VISUAL DEVICE MINIMUM CANDELA RATING.
	F 30	FIRE ALARM HORN (AS INDICATED IN SPECIFICATIONS) WITH INTEGRAL VISUAL DEVICE, CEILING. NUMBER INDICATES VISUAL DEVICE MINIMUM CANDELA RATING.
	F 30	FIRE ALARM VISUAL DEVICE, CEILING. NUMBER INDICATES VISUAL DEVICE MINIMUM CANDELA RATING.
	FS	SPRINKLER SYSTEM WATER FLOW DETECTOR SWITCH.
	TS	SPRINKLER SYSTEM VALVE SUPERVISORY (TAMPER) SWITCH.
6'-0" TO TOP	FACP	MAIN FIRE ALARM CONTROL PANEL, WALL.
5'-0" TO TOP	FAAP	FIRE ALARM ANNUNCIATOR PANEL, WALL.

ELECTRICAL ABBREVIATIONS

A OR AMP	AMPERE
ABD	ABANDONED
ABV	ABOVE
AC	ALTERNATING CURRENT
ACB	ABOVE COUNTER BACKSPLASH
AF OR AFI	ARC FAULT INTERRUPTER
AFD	ADJUSTABLE FREQUENCY DRIVE
AFF	ABOVE FINISHED FLOOR
AIC	AMPERES INTERRUPTING CAPACITY
AIP	ABANDONED IN PLACE
AL	ALUMINUM
AM	AMMETER
AMPL	AMPLIFIER
ASYM	ASYMMETRICAL
ATS	AUTOMATIC TRANSFER SWITCH
AWG	AMERICAN WIRE GAGE
BAS	BUILDING AUTOMATION SYSTEM
BEL	BELOW
BD	BUS DUCT
BOT	BOTTOM
BRKR	BREAKER
C	COUNTERTOP
CA	CABLE
CAB	CABINET
CATV	CABLE TV
CB	CIRCUIT BREAKER
CCTV	CLOSED CIRCUIT TELEVISION
CF	COMPACT FLUORESCENT
CKT	CIRCUIT
CLG	CEILING
CND	CONDUIT
CNTR	CENTER
COMB	COMBINATION
COND	CONDUCTOR
CONN	CONNECTION
CONT	CONTACTOR
CR	CORROSION RESISTANT
CT	CURRENT TRANSFORMER
CTRL	CONTROL
CU	COPPER
CW	COLD WATER
DB	DOOR BELL
DC	DIRECT CURRENT
DIM	DIMENSION
DISC	DISCONNECT
DIV.	DIVISION
DR	DOOR RELEASE SERVICE
DS	DOOR SWITCH OR DISPLAY SCREEN
DWG	DRAWING
E OR EMER	EMERGENCY
EC	EMPTY CONDUIT
ECNC	EXIST CND AND NEW CONDS
EGC	EQUIPMENT GROUNDING EQUIPMENT
EL	EXIST RELOCATED TO THIS LOCATION
ELEC	ELECTRIC OR ELECTRICAL
ELEV	ELEVATOR
EM	EXIST REMOVED
EML	EXIST REMOVED AND RELOCATED
EMN	EXIST REMOVED AND NEW INSTALLED
EMT	ELECTRICAL METALLIC TUBING
ENCL	ENCLOSURE
ENG	ENGINE
EP	EXPLOSION PROOF
EQUIP	EQUIPMENT
ER	EXIST TO REMAIN
ERC	ELEVATOR RECALL
EWC	ELECTRIC WATER COOLER
EXIST	EXISTING
EXT	EXTERIOR
FA	FIRE ALARM
FACP	FIRE ALARM CONTROL PANEL
FACU	FIRE ALARM CONTROL UNIT
FDR	FEEDER
FC	FOOTCANDLE
FLUOR	FLUORESCENT
FSD	FIRE/SMOKE DAMPER
FSD/SD	FIRE/SMOKE DAMPER WITH INTEGRAL DUCT SMOKE DETECTOR
FSS	FUSIBLE SAFETY SWITCH
FXTR	FIXTURE
G	RECEPTACLE GUARD
GD	GARAGE DOOR
GEN	GENERATOR
GF OR GFI	GROUND FAULT INTERRUPTER
GFP	GROUND FAULT PROTECTION/PROTECTED
GND	GROUND
GTD	GEN TRANSFER DEVICE
H OR HOR	HORIZONTAL
HG	HOSPITAL GRADE
HGT	HEIGHT
HID	HIGH INTENSITY DISCHARGE
HOA	HAND-OFF-AUTOMATIC
HP	HORSEPOWER OR HEAT PUMP
HPF	HIGH POWER FACTOR
HPS	HIGH PRESSURE SODIUM
HTR	HEATER
HW	HOT WATER
HZ	HERTZ
IC	INTERCOM OR INTERRUPTING CAPACITY
IDF	INTERMEDIATE DISTRIUBTION FRAME
IG	ISOLATED GROUND
IMC	INTERMEDIATE METAL CONDUIT
INC	INCANDESCENT
INIT	INITIAL
JB	JUNCTION BOX
KCMIL	THOUSAND CIRCULAR MILS
KO	KNOCKOUT
KV	KILOVOLT
KVA	KILOVOLT-AMPERE
KVAR	KILOVOLT-AMPERE REACTIVE
KW	KILOWATT
KWH	KILOWATT-HOUR
LA	LIGHTNING ARRESTER
LED	LIGHT EMITTING DIODE
LPS	LOW PRESSURE SODIUM
LRP	LIGHTING RELAY PANEL
LGTS	LIGHTS
LUM	LUMENS OR LUMINAIRE
MAG	MAGNETIC
MAN	MANUAL
MATV	MASTER ANTENNA TELEVISION
MCA	MINIMUM CIRCUIT AMPACITY
MCB	MAIN CIRCUIT BREAKER
MCC	MOTOR CONTROL CENTER
MCM	THOUSAND CIRCULAR MILS
MDF	MAIN DISTRIBUTION FRAME
M/G	MOTOR/GENERATOR
MH	METAL HALIDE OR MOUNTING HEIGHT
MIN	MINIMUM
MLO	MAIN LUGS ONLY
MMS	MANUAL MOTOR STARTER
MNS	MASS NOTIFICATION SYSTEM
MOCP	MAXIMUM OVER CURRENT PROTECTION
MOD	MOTOR OPERATED DAMPER
MOT	MOTOR
MS	MAGNETIC STARTER
MTD	MOUNTED
MTG	MOUNTING
MTR	METER
MV	MERCURY VAPOR
N OR NORM	NORMAL
NEC	NATIONAL ELECTRICAL CODE
NEUT	NEUTRAL
NFSS	NON-FUSIBLE SAFETY SWITCH
NL	NIGHT LIGHT
NO	NUMBER
OH	OVERHEAD
P	POLE
PB	PULL BOX OR PUSHBUTTON
PBS	PUSHBUTTON STATION
PH	PHASE
PNL	PANEL OR PANELBOARD
PNLBRD	PANELBOARD
PRI	PRIMARY
PT	POTENTIAL TRANSFORMER
PVC	POLYVINYL CHLORIDE
PWR	POWER
QTY	QUANTITY
RB	RELAY BASE
REC	RECEPTACLE
REFRIG	REFRIGERATOR
RGS	RIGID GALVANIZED STEEL CONDUIT
S/O	SPACE ONLY
SB	SOUNDER BASE
SCCR	SHORT CIRCUIT CURRENT RATING
SMP	MOTOR OPERATED SMOKE DAMPER
SEC	SECONDARY
SL	SINGLE STATION
SMR	SURFACE METAL RACEWAY
SN	SOLID NEUTRAL
SP	SPECIAL PURPOSE
SPD	SURGE PROTECTIVE DEVICE
SPKR	SPEAKER
SR	SURFACE RACEWAY
SS	SURGE SUPPRESSOR
STR	STARTER
SW	SWITCH
SWBD	SWITCHBOARD
SWGR	SWITCHGEAR
SYM	SYMMETRICAL
T	TAMPER RESISTANT
TC	TIME CLOCK
TEL	TELEPHONE
TR	TAMPER RESISTANT
TV	TELEVISION
TYP	TYPICAL
U	USB CHARGER
UC	UNDERCOUNTER
UF	UNDERFLOOR
UG	UNDERGROUND
UL	UNDERWRITERS' LABORATORIES
UNO	UNLESS NOTED OTHERWISE
V	VOLT
VA	VOLT-AMPERE
VAR	VOLT-AMPERE REACTIVE
VERT	VERTICAL
VM	VOLTMETER
W	WATT OR WIRE
WG	WIRE GUARD
WP	WEATHERPROOF
XFMR	TRANSFORMER

NOTE (ELECTRICAL ABBREVIATIONS):

1. ALL ABBREVIATIONS LISTED MAY NOT APPLY TO THIS PROJECT. REFER TO OTHER ABBREVIATION LISTS ELSEWHERE IN THESE DOCUMENTS FOR ABBREVIATIONS NOT LISTED HERE.

GENERAL NOTES:

1. ALL VFD'S WILL BE FURNISHED BY THE MECHANICAL CONTRACTOR. THE ELECTRICAL CONTRACTOR SHALL MOUNT THE VFD'S (UNLESS THEY ARE INTEGRAL TO THE EQUIPMENT SERVED). CONNECT THE LINE SIDE POWER WIRING AND THE LOAD SIDE POWER WIRING FROM THE VFD'S TO THE EQUIPMENT. ALL CONTROL AND INTERLOCK WIRING FOR THE VFD'S WILL BE BY THE CONTROL SYSTEM CONTRACTOR.
2. LOAD SIDE CONDUCTOR AND CONDUIT SIZES FROM DISCONNECT SWITCHES, STARTERS AND VFD'S TO EQUIPMENT SHALL BE THE SAME AS LINE SIDE CONDUCTORS AND CONDUIT.
3. CAREFULLY COORDINATE ALL ELECTRICAL EQUIPMENT LOCATIONS WITH DUCTWORK, PIPING AND MECHANICAL EQUIPMENT. MAINTAIN ALL CLEARANCES AND SPACES REQUIRED BY THE NEC.
4. WHERE MULTIPLE CIRCUITS ARE COMBINED IN A SINGLE CONDUIT, DERATE CONDUCTORS PER THE NEC.
5. SEE SPECIFICATION SECTION 26 0519 FOR REQUIREMENTS REGARDING OVERSIZING CONDUCTORS FOR 1-POLE 15- AND 20-AMP CIRCUITS TO REDUCE VOLTAGE DROP - THESE OVERSIZING REQUIREMENTS TAKE PRECEDENCE OVER THE WIRE AND CONDUIT SIZES SHOWN IN THE PANEL SCHEDULES. OVERSIZED CONDUCTORS FOR VOLTAGE DROP ON OTHER CIRCUITS ARE INDICATED IN THE PANEL SCHEDULES.
6. UNLESS INDICATED OTHERWISE, ALL EXIT SIGNS AND THE VOLTAGE SENSING TERMINALS OF ALL GTD'S SHALL BE CONNECTED AHEAD OF ALL SWITCHES, RELAYS, SENSORS AND POWER PACKS WITH 2 #12 AND 1 #12 GROUND IN 1/2" CONDUIT.
7. ALL EMERGENCY LIGHTING FIXTURES SHALL BE MARKED SO AS TO BE IDENTIFIED BY VISUAL INSPECTION FOR TESTING PURPOSES. IDENTIFICATION SHALL BE BY ONE 1/2" RED SELF-STICK DOT ON THE VERTICAL PORTION OF LOUVER OR ON THE TOP OF THE LENS.
8. EXACT LOCATION AND ORIENTATION OF OCCUPANCY SENSORS SHALL BE AS RECOMMENDED BY MANUFACTURER TO OBTAIN COMPLETE COVERAGE. IF THE CONTRACTOR USES A SENSOR THAT HAS A COVERAGE PATTERN DIFFERENT FROM THAT WHICH IS SPECIFIED, AND AS A RESULT ADDITIONAL SENSORS ARE REQUIRED TO COMPLETELY COVER A SPACE, THE CONTRACTOR SHALL PROVIDE ADDITIONAL SENSORS AS REQUIRED (CONNECTED IN PARALLEL WITH EACH OTHER) AT NO ADDITIONAL COST TO THE OWNER. ALL OCCUPANCY SENSOR TIME DELAYS SHALL BE SET TO NO MORE THAN 30 MINUTES.
9. UNLESS INDICATED OTHERWISE, SWITCHES AND OCCUPANCY SENSORS IN A ROOM/SPACE SHALL CONTROL ALL LIGHTING FIXTURES IN THAT ROOM/SPACE.
10. IT SHALL BE THE CONTRACTOR'S RESPONSIBILITY TO DETERMINE ALL PANELBOARD AND SWITCHBOARD FEEDER ENTRANCE LOCATIONS (TOP, BOTTOM, SIDE).
11. WHERE SMOKE OR FIRE/SMOKE DAMPERS ARE CONTROLLED BY MORE THAN ONE DETECTOR, CONNECT SUCH THAT ANY OF THE DETECTORS WILL DISCONNECT POWER TO THE DAMPER.
12. DUCT SMOKE DETECTORS FOR AIR HANDLING EQUIPMENT SHALL BE INSTALLED IN THE DUCT(S) BEFORE ANY BRANCH TAKE-OFFS. CONTROL WIRING FROM SMOKE DETECTOR CONTROL RELAY WILL BE PROVIDED BY CONTROL SYSTEM CONTRACTOR. WHERE DUCTWORK CONFIGURATION IS SUCH THAT ONE DETECTOR WILL NOT PROPERLY SAMPLE THE AIR, ADDITIONAL DETECTORS SHALL BE PROVIDED. FIRE ALARM SYSTEM SUPPLIER SHALL MAKE THIS DETERMINATION BEFORE SUBMITTING HIS BID.
13. ELEVATOR FIRE ALARM INTERFACE SHALL BE AS FOLLOWS: SMOKE DETECTORS IN ELEVATOR LOBBIES, MACHINE ROOMS, PITS, AND AT THE TOP OF ELEVATOR HOISTWAYS, WHEN IN ALARM STATUS, SHALL IMMEDIATELY SEND THE FIRE ALARM SYSTEM INTO ALARM MODE AND SHALL IMMEDIATELY SEND A SIGNAL TO THE ELEVATOR CONTROLLER TO INITIATE PHASE I RECALL; CAUSING THE ELEVATOR TO RETURN TO THE DESIGNATED OR ALTERNATE FLOOR, PARK AND OPEN DOORS, PER NPFA 72 SECTION 21.3.3.1 & SECTION 21.3.9 AND PER 2019 ASME A17.1, 2.27.3.2. HEAT DETECTOR(S) IN ELEVATOR MACHINE ROOM(S) AND ELEVATOR HOISTWAY(S) AND ELEVATOR PIT(S) SHALL HAVE A LOWER TEMPERATURE RATING AND HIGHER SENSITIVITY AS COMPARED TO THE SPRINKLERS, PER NFPA 72 SECTION 21.4.1. THE HEAT DETECTORS (TO BE LOCATED WITH 24" OF EACH SPRINKLER HEAD) SHALL BE USED TO SHUT DOWN THE ELEVATOR PRIOR TO SPRINKLER OPERATION, PER NFPA 72 SECTION 21.4.2 AND PER VCC 3005.7.3. WHEN THE HEAT DETECTORS ARE IN ALARM STATUS THEY SHALL IMMEDIATELY SEND THE FIRE ALARM SYSTEM INTO ALARM MODE AND START A DELAY THAT WILL ALLOW THE ELEVATOR TO TRAVEL FROM THE TOP OF THE HOISTWAY TO THE LOWEST RECALL LEVEL PRIOR TO ACTIVATING THE SHUNT-TRIP DEVICE IN THE ELEVATOR CIRCUIT BREAKER TERMINATING POWER TO THE ELEVATOR, PER NFPA 72 SECTION 21.4.2 AND PER VCC 3005.5. ALL ELEVATOR HOISTWAY, PIT, AND MACHINE ROOM SMOKE AND HEAT DETECTORS SHALL HAVE AN EXTRA SET OF CONTACTS TO OPERATE THE IN-CAR FIRE HAT WHEN IN ALARM STATUS, PER NFPA 72 SECTION 21.3.14.1 (NOTE THAT SOME ELEVATOR MANUFACTURES REQUIRED TWO RELAYS TO FLASH HAT). CONTROL CIRCUITS TO SHUT DOWN ELEVATOR POWER SHALL BE MONITORED FOR THE PRESENCE OF OPERATING VOLTAGE, PER NFPA 72 SECTION 21.4.4. LOSS OF VOLTAGE TO THE CONTROL CIRCUIT FOR THE DISCONNECTING MEANS SHALL CAUSE A SUPERVISORY SIGNAL TO BE INDICATED AT THE CONTROL UNIT AND REQUIRED REMOTE ANNUNCIATOR(S), PER NFPA 72 SECTION 21.4.5. COMPLY WITH 2019 ASME A17.1, VCC 3005, AND NFPA 72 SECTIONS 21.3 AND 21.4.
14. PROVIDE ALL 120-VOLT POWER NEEDED FOR THE FIRE ALARM SYSTEM. PROVIDE CIRCUIT BREAKER LOCKS AND CLEARLY INDICATE IN THE DIRECTORY THAT THEY ARE FIRE ALARM CIRCUITS. PROVIDE RED BREAKER, RED BREAKER LOCK OR RED DOT ON DEAD FRONT COVER BESIDE BREAKER. POWER SUPPLY QUANTITIES SHALL BE DETERMINED BY THE FIRE ALARM SUPPLIER AND INCLUDED IN BID. ALL POWER SUPPLIES SHALL BE LOCATED IN UTILITY-TYPE SPACES (MECH/ELEC/COMM ROOMS, HOUSEKEEPING CLOSETS, TRASH ROOMS, ETC.).
15. CAREFULLY COORDINATE LOCATIONS OF ALL LIGHTING FIXTURES, OCCUPANCY SENSORS, SMOKE AND HEAT DETECTORS, FIRE ALARM NOTIFICATION APPLIANCES AND OTHER ELECTRICAL CEILING DEVICES WITH SPRINKLER HEADS AND HVAC CEILING DEVICES. COORDINATE SURFACE MOUNTED LIGHTING FIXTURES ON LOW CEILINGS SUCH THAT FIXTURES WILL NOT INTERFERE WITH DOOR SWINGS.
16. WHERE NEW DEVICES (RECEPTACLES, SWITCHES OR TELECOMMUNICATIONS) ARE SHOWN ON EXISTING WALLS ALONG WITH EXISTING DEVICES BEING REPLACED (EXISTING OUTLET BOXES BEING REUSED), INSTALL ALL NEW DEVICES ON THAT WALL AT SAME HEIGHT AS EXISTING DEVICES. FOR EXAMPLE, IF EXISTING RECEPTACLES ON A WALL ARE 15" AFF, INSTALL NEW RECEPTACLES ON THAT WALL 15" AFF.
17. WHERE NEW DEVICES (RECEPTACLES, SWITCHES, TELECOMMUNICATIONS OR FIRE ALARM) ARE SHOWN ON EXISTING WALLS AND CEILINGS AND THERE ARE NO EXISTING CONCEALED OUTLET BOXES OR CONDUITS TO REUSE, USE SURFACE RACEWAY (SINGLE-CHANNEL EXCEPT WHERE SPECIFICALLY INDICATED OTHERWISE), EXCEPT EXPOSED CONDUIT AND BOXES MAY BE USED IN UNFINISHED AREAS (MECHANICAL/ELECTRICAL/IT ROOMS, STORAGE AND HOUSEKEEPING CLOSETS, ETC.).
18. WHERE RE-USE OF EXISTING CONDUIT, WIRING AND/OR OUTLET BOXES IS INDICATED, ALSO PROVIDE NEW MATERIALS IF NECESSARY. IF NEW EXPOSED MATERIALS ARE NEEDED, USE SURFACE RACEWAY (SINGLE-CHANNEL EXCEPT WHERE SPECIFICALLY INDICATED OTHERWISE), EXCEPT EXPOSED CONDUIT AND BOXES MAY BE USED IN UNFINISHED AREAS (MECHANICAL/ELECTRICAL/IT ROOMS, STORAGE AND HOUSEKEEPING CLOSETS, ETC.).
19. PROVIDE SHALLOW BOXES FOR NEW DEVICES IN FURRED WALLS. COORDINATE DEPTH WITH ARCHITECTURAL.
20. WHERE OUTLETS ARE SHOWN ABOVE A COUNTER OR SIMILAR SURFACE WITH A SPECIFIC MOUNTING HEIGHT, COORDINATE MOUNTING HEIGHT WITH BOTH THE SURFACE BELOW AND WITH ANY WALL MOUNTED ARCHITECTURAL ITEMS ABOVE (TACKBOARDS, ETC.) BEFORE ROUGH-IN.
21. FOR WALL DEVICES MOUNTED ABOVE ARCHITECTURAL ITEMS (SUCH AS FIRE ALARM STROBES OR CLOCKS MOUNTED ABOVE MARKERBOARDS, TACKBOARDS OR SMARTBOARDS), COORDINATE MOUNTING HEIGHTS OF WALL DEVICES SUCH THAT THEY DO NOT INTERFERE WITH ARCHITECTURAL ITEMS.
22. WHERE SURFACE RACEWAY IS USED, COORDINATE WITH MARKERBOARD, TACKBOARD AND SMARTBOARD LOCATIONS IN ORDER TO AVOID INTERFERENCE WITH RACEWAY.
23. FOR ALL EXISTING OUTLET BOXES THAT ARE NOT BEING REUSED, PROVIDE BLANK COVER PLATE TO MATCH NEW WALL PLATES IN THAT AREA.
24. SEE ARCHITECTURAL DRAWINGS FOR RATED WALL, FLOOR AND CEILING CONSTRUCTION, AND PROVIDE NECESSARY RATED DEVICES AND FIRE SEALANT FOR PENETRATIONS. WHERE NEW DEVICES ARE SHOWN RECESSED IN RATED PARTITIONS, CAREFULLY COORDINATE LOCATIONS AND OFFSETS.
25. PROVIDE CORD AND PLUG TO MATE AND MATCH WITH RECEPTACLE PROVIDED FOR ALL RESIDENTIAL-TYPE RANGES, DRYERS, DISHWASHERS, AND OTHER APPLIANCES.
26. PROVIDE ALL 120-VOLT POWER NEEDED BY THE BAS. COORDINATE WITH THE CONTROLS SPECIFICATIONS AND CONTRACTOR.
27. MODIFY EXISTING PANEL SCHEDULES TO ACCURATELY REFLECT ALL CHANGES MADE AS PART OF THIS CONTRACT. ALL NEW BREAKERS IN EXISTING PANELS SHALL MATCH EXISTING AIC. PROVIDE NEW "TYPED" AS-BUILT PANEL SCHEDULES, HANDWRITTEN PANEL SCHEDULES WILL NOT BE ACCEPTED.
28. FOR ALL EXTERIOR UNDERGROUND CONDUIT AND WIRING, CAREFULLY COORDINATE ALL WORK WITH EXISTING SOIL CONDITIONS AND WITH EXISTING UTILITIES IN ORDER TO AVOID CONFLICTS. NOTIFY ENGINEER IF ROUTING MUST BE DIFFERENT FROM WHAT IS SHOWN ON THE DRAWINGS.
29. THE CONTRACTOR SHALL VISIT THE SITE PRIOR TO SUBMITTING BID IN ORDER TO VERIFY ALL EXISTING CONDITIONS, TO DETERMINE THE FULL EXTENT OF DEMOLITION WORK REQUIRED, AND TO DETERMINE THE FULL EXTENT OF RELOCATION AND MODIFICATION WORK REQUIRED FOR ELECTRICAL WORK (DUE TO OTHER DISCIPLINES INTERFERING OR ANY OTHER REASON). EXISTING SPACE IS TIGHT IN MANY AREAS (PARTICULARLY ABOVE CEILINGS), AND THE CONTRACTOR SHALL BE FULLY RESPONSIBLE TO COORDINATE ALL ELECTRICAL WORK WITH BOTH NEW AND EXISTING PIPING, DUCTWORK, CONDUIT, ETC. NO CHANGE ORDERS WILL BE APPROVED FOR ADDITIONAL WORK DUE TO THE CONTRACTOR NEGLECTING TO VISIT THE SITE AND GATHER ALL NECESSARY INFORMATION.
30. THE CONTRACTOR SHALL PROVIDE COVERPLATES ON ALL EXISTING JUNCTION BOXES ABOVE THE ACCESSIBLE CEILING SPACES AND ANY WALL MOUNTED BOXES IN THE AREA OF RENOVATIONS WHERE EXISTING COVERPLATES ARE MISSING. THE CONTRACTOR SHALL ALSO PROVIDE ADDITIONAL SUPPORTS FOR EXISTING CONDUIT AND JUNCTION BOXES IN THE AREA OF RENOVATIONS THAT CURRENTLY DO NOT MEET CODE REQUIREMENTS.
31. WHERE EXISTING CIRCUITS ARE SPECIFIED TO BE REUSED FOR THE AREA OF RENOVATIONS AND THE CONTRACTOR DISCOVERS IN THE FIELD THAT THE CIRCUITS DO NOT MEET CODE, OR THEY HAVE SHARED NEUTRALS, OR THEY ARE MISSING A GROUND CONDUCTOR THE CONTRACTOR SHALL PROVIDE NEW CONDUIT AND WIRING FROM THE PANEL TO THE EXISTING AND NEW ELECTRICAL EQUIPMENT. ALL NEW CIRCUITS SHALL MEET SPECIFICATIONS FOR VOLTAGE DROP FOR SINGLE-PHASE WIRING.
32. WHERE EXISTING CEILING MOUNTED LIGHT FIXTURES IN THE RENOVATION AREA ARE TO REMAIN OR BE REMOVED AND REINSTALLED IN AN ACCESSIBLE CEILING GRID AND THEY ARE NOT PROVIDED WITH SEPARATE STRUCTURAL SUPPORT FROM THE BUILDING STRUCTURAL FRAMING MEMBERS ABOVE, THE CONTRACTOR SHALL PROVIDE LIGHT FIXTURE SUPPORTS FOR THESE EXISTING LIGHT FIXTURES THAT MEET THE SPECIFICATIONS.
33. WHERE MODIFICATIONS TO EXISTING AND/OR NEW HVAC EQUIPMENT, HVAC DUCTWORK, HVAC PIPING, PLUMBING EQUIPMENT, PLUMBING PIPING, SPRINKLER EQUIPMENT, SPRINKLER PIPING, ARCHITECTURAL CEILINGS, ARCHITECTURAL WALLS, ARCHITECTURAL FLOORS, ARCHITECTURAL FURNITURE, ARCHITECTURAL EQUIPMENT (ELEVATORS, ESCALATORS, DOORS, WINDOWS, MOVABLE PARTITIONS, ETC.), STRUCTURAL ELEMENTS (TIES, STRUTS, BEAMS, COLUMNS, ETC.) ARE PROVIDED IN AN EXISTING BUILDING RENOVATION AND ANY OF THESE ELEMENTS CREATE CONFLICTS WITH EXISTING ELECTRICAL INSTALLATIONS THAT ARE TO REMAIN, THE CONTRACTOR SHALL PROVIDE ALL MODIFICATIONS TO THE EXISTING ELECTRICAL INSTALLATIONS NECESSARY TO ACCOMMODATE THE MODIFIED AND/OR NEW ELEMENTS. MODIFICATIONS TO EXISTING ELECTRICAL INSTALLATIONS SHALL INCLUDE, BUT IS NOT LIMITED TO, RELOCATING EXISTING ELECTRICAL EQUIPMENT (PANELS, TRANSFORMERS, DISCONNECT SWITCHES, MOTOR STARTERS, VFD'S, RELAY PANELS, ETC.), LIGHT FIXTURES, ELECTRICAL DEVICES (LIGHTING CONTROLS, RECEPTACLES, FIRE ALARM DEVICES, TELECOM OUTLETS, JUNCTION BOXES, ETC.), AND REROUTING EXISTING FEEDERS AND/OR BRANCH CIRCUITS (CONDUIT, JUNCTION BOXES, AND WIRING). PROVIDE NEW MATERIALS WHERE REQUIRED TO RELOCATE EXISTING ELECTRICAL EQUIPMENT, LIGHT FIXTURES AND ELECTRICAL DEVICES TO NEW LOCATIONS. PROVIDE NEW MATERIAL WHERE REQUIRED TO REROUTE EXISTING FEEDERS AND/OR BRANCH CIRCUITS. THIS INCLUDES, BUT IS NOT LIMITED TO, PROVIDING NEW JUNCTION BOXES, CONDUIT, WIRING, AND OTHER REQUIRED MATERIALS NECESSARY TO EXTEND EXISTING FEEDERS AND/OR BRANCH CIRCUITS TO THE NEW EQUIPMENT LOCATIONS OR WORK AROUND NEW ELEMENTS.

SPECTRUM DESIGN
architects | engineers

Plaza Suite 1
10 Church Avenue, SE
Roanoke, VA 24011

540.342.6001
spectrumpc.com

LPA
LAWRENCE PERRY & ASSOCIATES
Consulting Engineers
15 E Salem Avenue SE, Suite 101 Ph: (540) 342-1816
Roanoke, Virginia 24011 Fax: (540) 344-3410
Comm. No.: 25114

© Lawrence Perry and Associates, Inc.

BEDFORD COUNTY SHERIFF'S OFFICE EXPANSION

SPECTRUM DESIGN PROJECT NO.: **24112**

COMMONWEALTH OF VIRGINIA
05/04/2026
WINSTON A. MATTHEWS
Lic. No. 044469
PROFESSIONAL ENGINEER

PROJ. MGR.: **RCH** CHECKED BY: **WAM** DRAWN BY: **MAS**

SHEET ISSUE DATE:
05.04.2026

PROJECT PHASE:
BID DOCUMENTS

SHEET REVISIONS:

PLAN NORTH SITE NORTH

SHEET NAME:
ELECTRICAL LEGEND, ABBREVIATIONS,AND NOTES

SHEET NUMBER:
E001

ORIGINAL SIZE : ARCH E1 (30X42) | 5/4/2026 3:38:51 PM
C:\Users\mas\OneDrive - Lawrence Perry And Associates\Documents\25114 - Bedford Sheriff's Office - ELEC - R26_msmithQTWNS.rvt

VISUAL APPLIANCE MOUNTING HEIGHT CONSIDERATIONS IN SLEEPING ROOMS
1. MIN DISTANCE IN SLEEPING ROOMS IS 24" (610mm) FROM CEILING TO TOP OF LENS FOR 110CD STROBES WITHIN 16' OF THE PILLOW.
2. 177CD STROBES, USED IN SLEEPING ROOMS, CAN BE WITHIN THE 24" (610mm) MINIMUM DISTANCE FROM THE CEILING. THE HIGHER INTENSITY IS TO COMPENSATE FOR A POSSIBLE SMOKE LAYER.

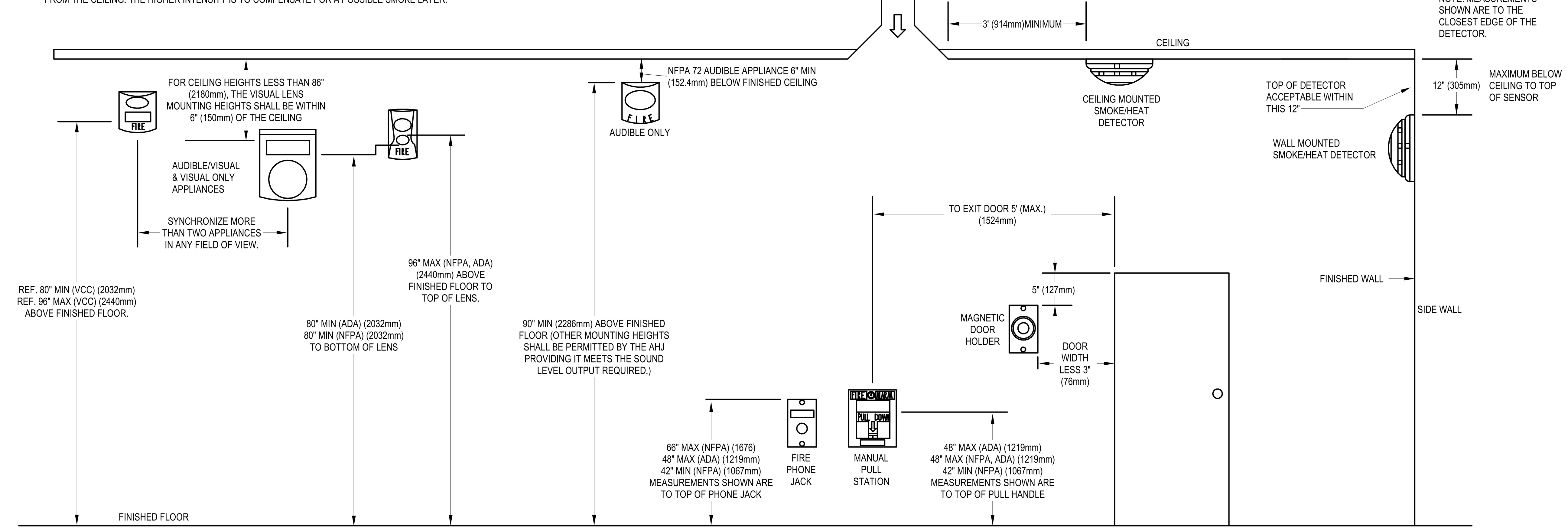

NOTES:
1. REFER TO THE PROPER DEVICE INSTALLATION INSTRUCTIONS FOR BACKBOX MOUNTING HEIGHT.

FIRE ALARM DEVICE ELEVATIONS
PER NFPA 72

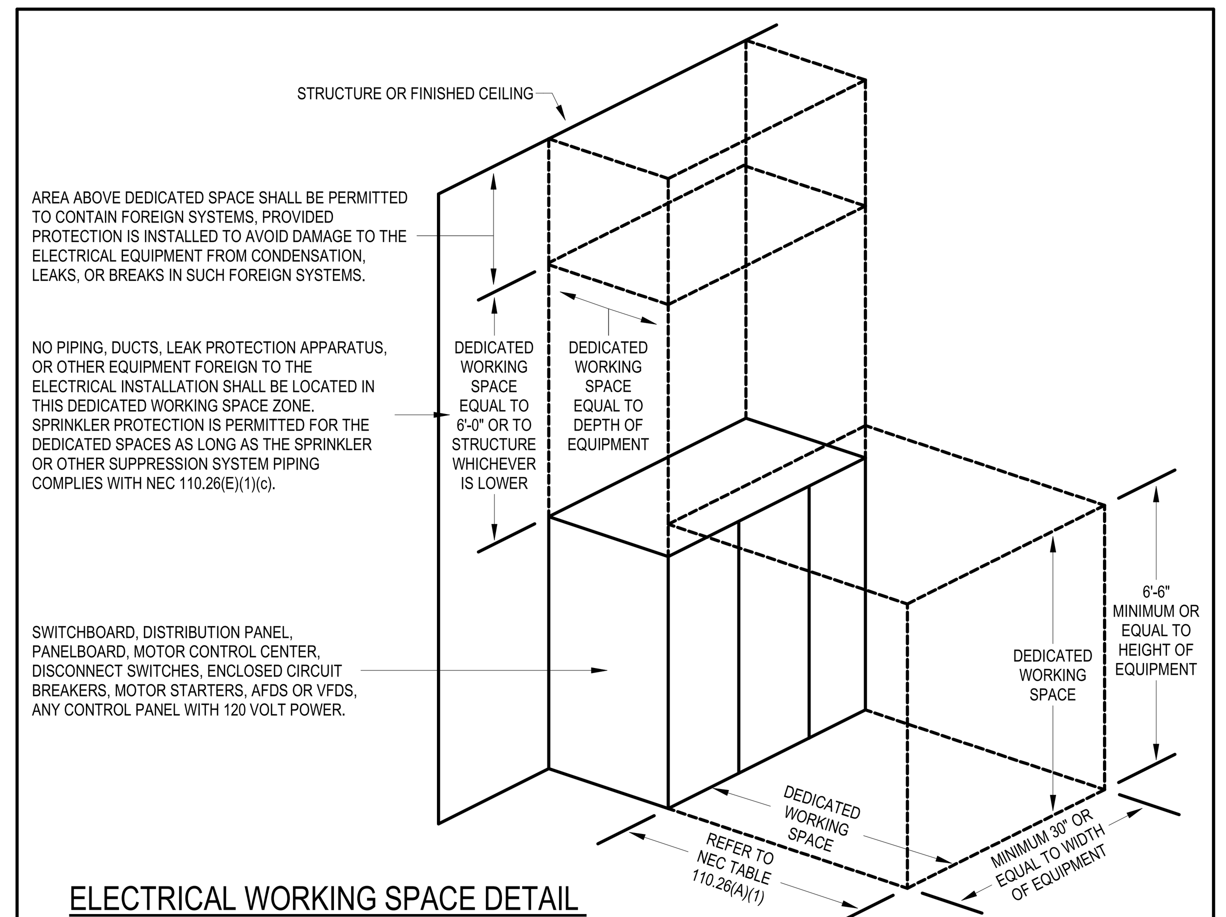

ELECTRICAL WORKING SPACE DETAIL
NO SCALE

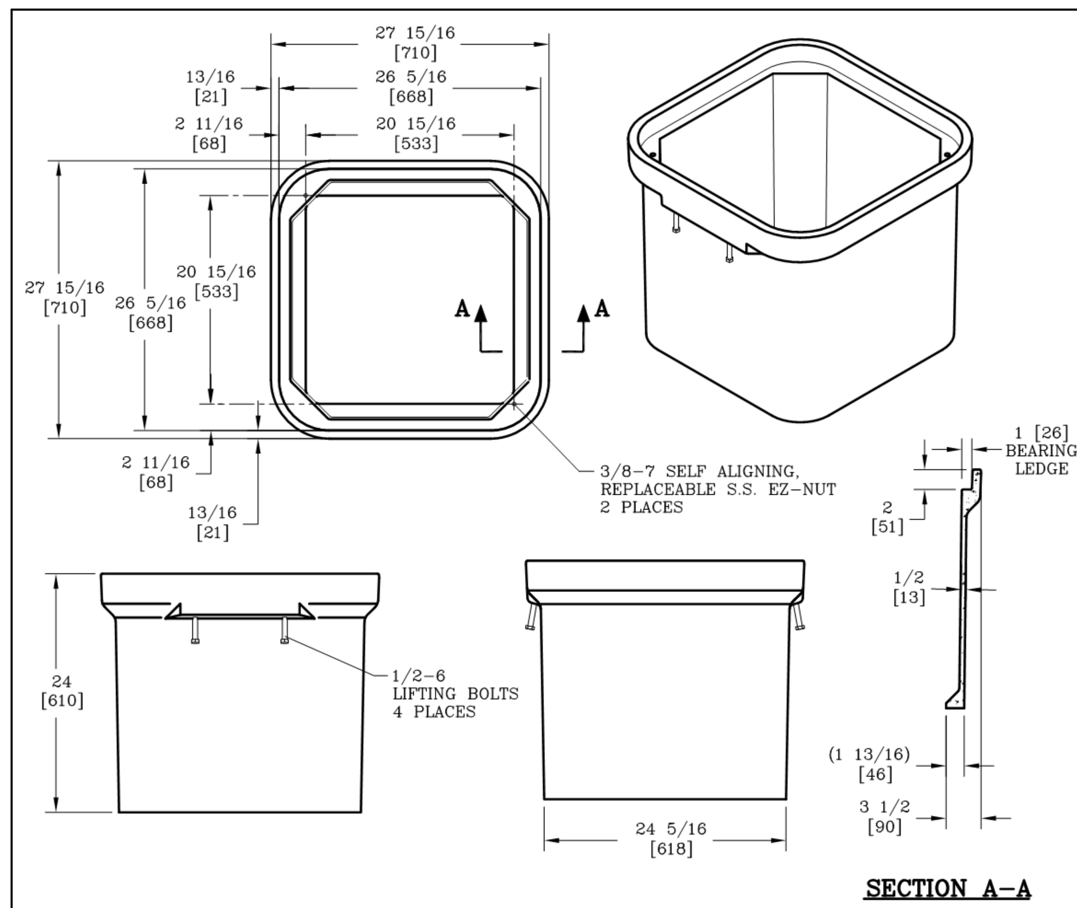

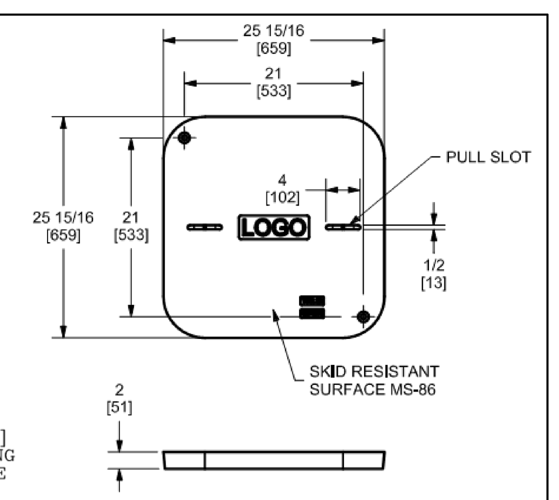

NOTES:
1. DIMENSIONS IN BRACKET ARE IN MILLIMETERS UNLESS NOTED OTHERWISE.
2. REFER TO ELECTRICAL INSTALLATION DETAILS ON THIS SHEET.
3. BASE OF DESIGN 24"x24"x24" MANHOLE: HUBBELL QUAZITE BOX MODEL # PG2424BG24, OR EQUAL.
   A. SPECIFICATIONS: 24" WIDE X 24" LONG X 24" DEEP, POLYMER CONCRETE, BELOW GROUND BOX, STANDARD OPEN BOTTOM.
4. BASIS OF DESIGN 24"x24" MANHOLE COVER: HUBBELL QUAZITE COVER MODEL # PG2424HH00, OR EQUAL.
   A. SPECIFICATIONS: 24" WIDE X 24" LONG, RATED FOR A STATIC DESIGN LOAD OF 22,500 LBS, POLYMER CONCRETE, 2-BOLT GASKETED COVER, WITH LOGO (REFER TO ELECTRICAL SITE PLAN ON SHEET E-003 FOR REQUIRED LOGOS). COVER SHALL BE BY THE SAME MANUFACTURE AS THE BOX.

24"x24"x24" MANHOLE
SCALE: NO SCALE

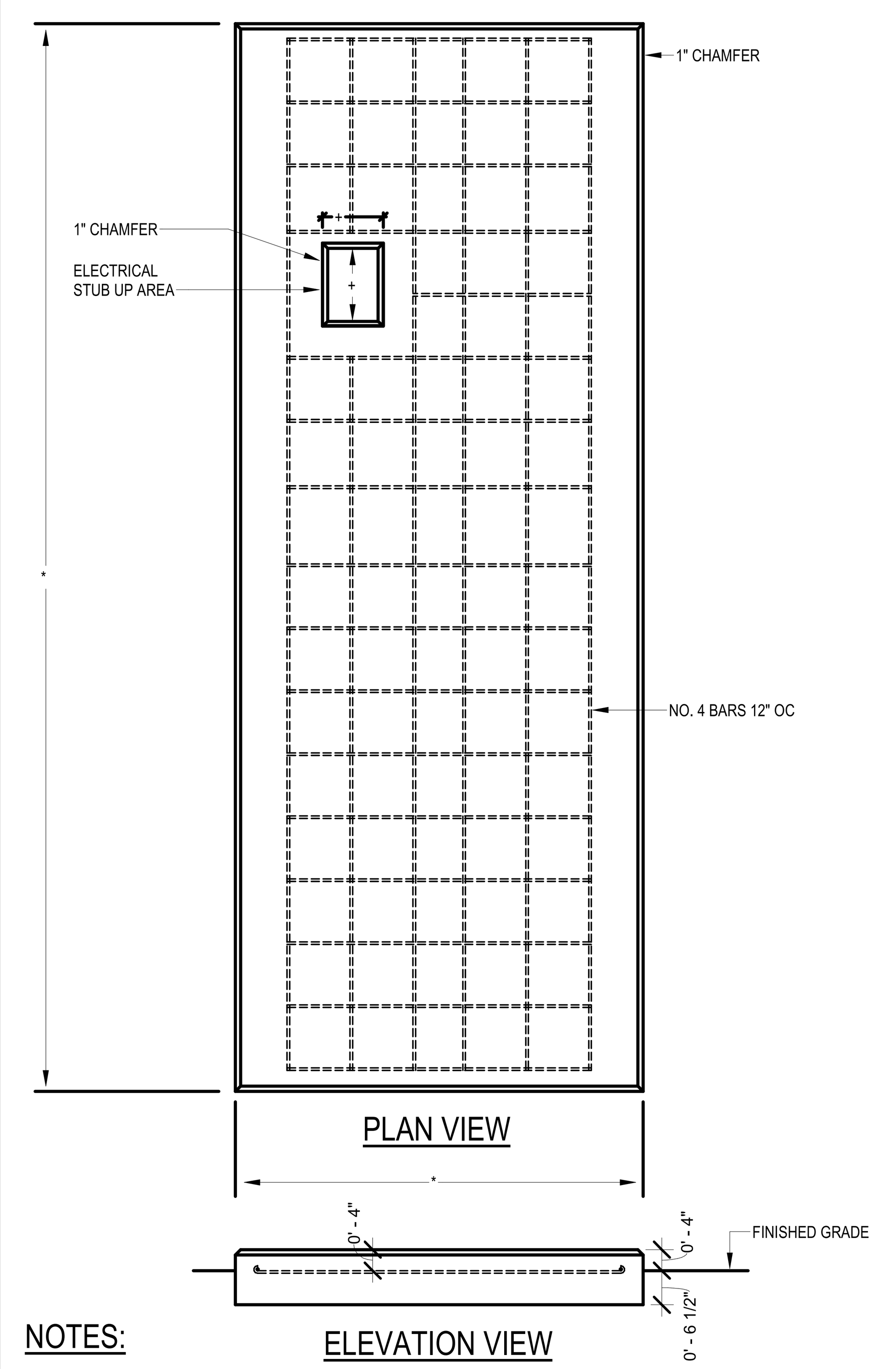

NOTES:
1. CONCRETE PAD RECOMMENDATIONS: USE 4000 PSI WITH #4 REBAR ON 12" CENTERS AND AN 10.5" THICK PAD FOR SUPPORTING GENERATOR. CONFIRM CONCRETE PAD DETAILS WITH STRUCTURAL ENGINEER. BASIS OF DESIGN WEIGHT OF GENERATOR WITH ENCLOSURE, SUB-BASE FUEL TANK FULL OF DIESEL FUEL, AND STAIR/PLATFORM IS APPROXIMATELY 28,000 LBS.
2. PROVIDE MINIMUM OF 4 FEET OF CLEARANCE AROUND ALL 4 SIDES OF THE GENERATOR FOR MAINTENANCE AND AIR FLOW.
3. ANCHOR THE GENERATOR FUEL TANK AND STAIR/PLATFORM TO THE CONCRETE PAD PER MANUFACTURER'S RECOMMENDATIONS. COORDINATE WITH THE GENERATOR MANUFACTURER AND THE FINAL APPROVED GENERATOR SHOP DRAWING FOR EXACT LOCATIONS ON THE GENERATOR AND STAIR/PLATFORM FOR ANCHOR ATTACHMENTS.
4. INSTALL GENERATOR SO EXHAUST OF GENERATOR IS FURTHEST FROM THE BUILDING.
5. (*) DIMENSIONS FOR THE CONCRETE PAD SHALL BE DETERMINED BY THE DIMENSIONS OF FINAL APPROVED SHOP DRAWING OF GENERATOR ASSEMBLY (INCLUDING THE STAIR/PLATFORM AND GENERATOR SUB-BASE FUEL TANKS) AND SHALL EXTEND 1 FOOT BEYOND OUTER EDGES OF THE ASSEMBLY ON ALL FOUR SIDES.
6. (+) DIMENSIONS FOR STUB UP LOCATIONS SHALL BE DETERMINED BY THE SPECIFIC REQUIREMENTS OF THE FINAL APPROVED GENERATOR SHOP DRAWING. COORDINATE WITH OWNER PRIOR TO POURING PAD.

GENERATOR CONCRETE PAD
SCALE: NONE

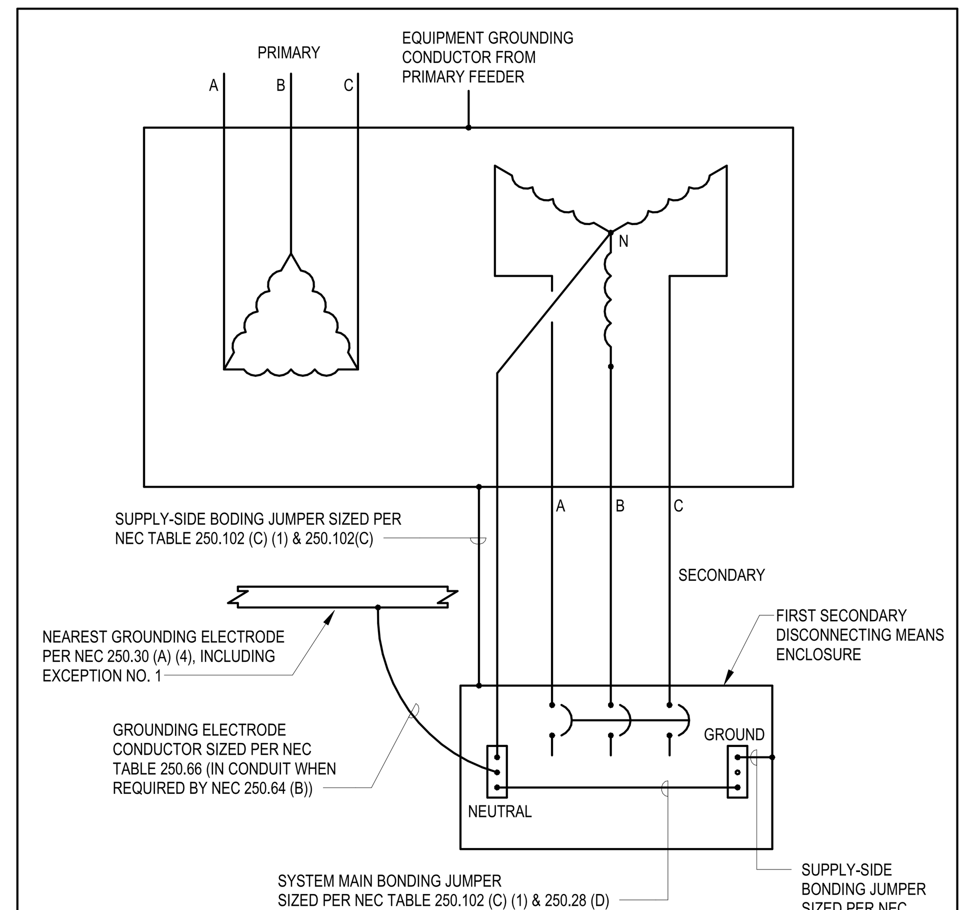

3-PHASE DRY-TYPE TRANSFORMER CONNECTION SCHEMATIC
NO SCALE

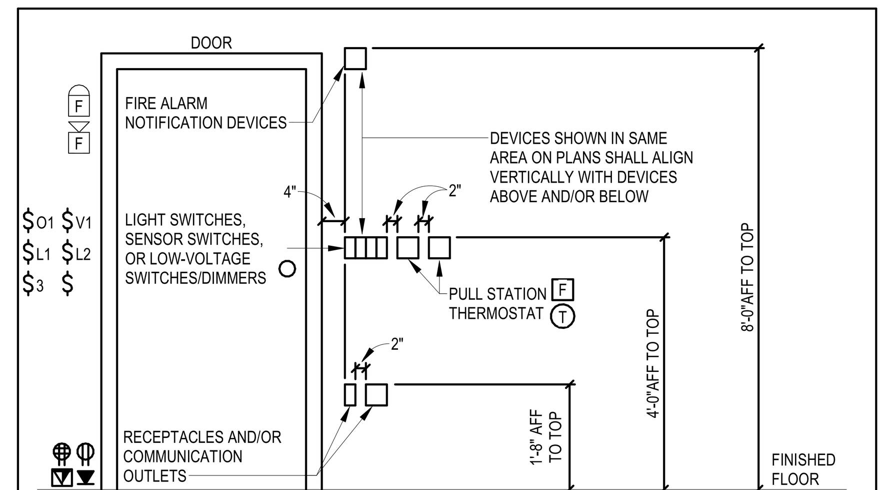

NOTES:
1. NOT ALL DEVICES SHOWN ARE USED IN ALL LOCATIONS. REFER TO THE ELECTRICAL FLOOR PLANS FOR DEVICE LOCATIONS.
2. WHERE DEVICE HEIGHTS INDICATED ON FLOOR PLANS ARE DIFFERENT FROM WHAT IS SHOWN IN THE DETAIL, THE HEIGHTS INDICATED ON FLOOR PLANS SHALL TAKE PRECEDENCE.
3. DEVICES SHOWN SIDE-BY-SIDE ON THE FLOOR PLANS THAT ARE NOT GANGED TOGETHER SHALL HAVE 2" OF SEPARATION BETWEEN THE FACEPLATES UNLESS NOTED OTHERWISE OR UNLESS MORE SEPARATION IS REQUIRED TO MAINTAIN FIRE RATING OF WALL.
4. FOR WALL DEVICES MOUNTED ABOVE ARCHITECTURAL ITEMS (SUCH AS FIRE ALARM STROBES, SPEAKERS, OR CLOCKS MOUNTED ABOVE MARKERBOARDS, TACKBOARDS, SMARTBOARDS, OR TV'S), COORDINATE MOUNTING HEIGHTS OF WALL DEVICES SUCH THAT THEY DO NOT INTERFERE WITH ARCHITECTURAL ITEMS.
5. FIRE ALARM DEVICE LENS SHALL BE MOUNTED SUCH THAT THE ENTIRE LENS IS NOT LESS THAN 80" AND NOT GREATER THAN 96" AFF PER NFPA 72.

TYPICAL WALL DEVICE LOCATION DETAIL
NO SCALE

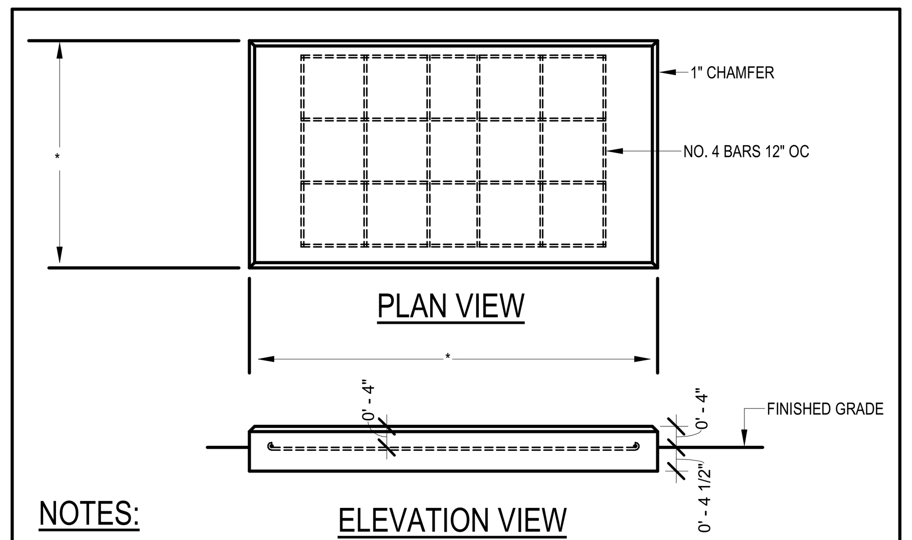

NOTES:
1. CONCRETE PAD RECOMMENDATIONS: USE 4000 PSI WITH #4 REBAR ON 12" CENTERS AND AN 6.5" THICK PAD FOR SUPPORTING MTS-EH, MTS-LH, ATS-EH, ATS-LH, AND 300KVA TRANSFORMER. CONFIRM CONCRETE PAD DETAILS WITH STRUCTURAL ENGINEER. WEIGHTS WILL VARY FOR EACH PIECE OF EQUIPMENT, RANGING FROM APPROXIMATELY 600 LBS TO 2,220 LBS.
2. PROVIDE NEC AND MANUFACTURER'S CLEARANCES IN FRONT OF ALL WORKING SPACES OF THE EQUIPMENT.
3. ANCHOR THE EQUIPMENT TO THE CONCRETE PAD PER MANUFACTURER'S RECOMMENDATIONS. COORDINATE WITH THE MANUFACTURER AND THE FINAL APPROVED SHOP DRAWINGS FOR EXACT LOCATIONS OF ANCHOR ATTACHMENTS.
4. (*) DIMENSIONS FOR THE CONCRETE PAD SHALL BE DETERMINED BY THE DIMENSIONS OF FINAL APPROVED SHOP DRAWING EQUIPMENT ENCLOSURE AND SHALL EXTEND 6 INCHES BEYOND OUTER EDGES OF THE ENCLOSURE ON ALL FOUR SIDES.
5. INSTALL UNDERGROUND CONDUITS STUBBING UP INTO THE BOTTOM OF THE EQUIPMENT

ELECTRICAL EQUIPMENT CONCRETE PAD
SCALE: NONE

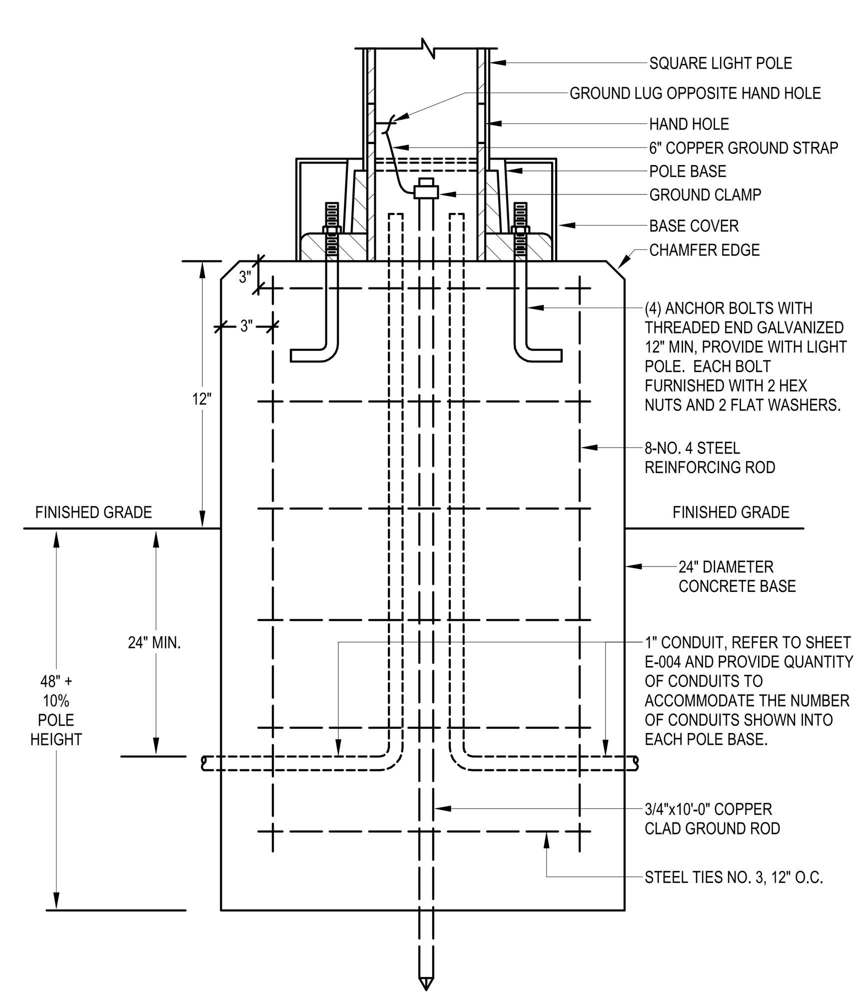

CONCRETE POLE BASE DETAIL
SCALE: NONE

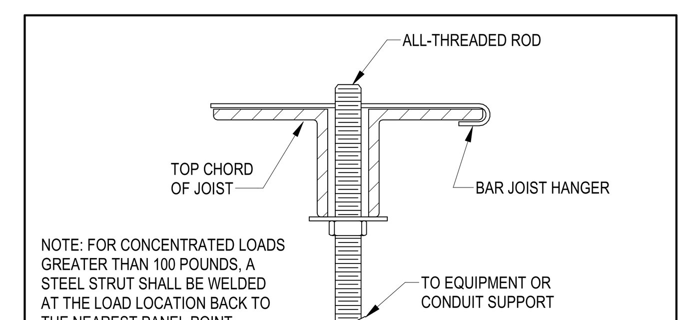

NOTE: FOR CONCENTRATED LOADS GREATER THAN 100 POUNDS, A STEEL STRUT SHALL BE WELDED AT THE LOAD LOCATION BACK TO THE NEAREST PANEL POINT.

CONDUIT SUPPORT ATTACHMENT TO JOIST DETAIL
NO SCALE

SPECTRUM DESIGN
architects | engineers
Plaza Suite 1
10 Church Avenue, SE
Roanoke, VA 24011
540.342.6001
spectrumpc.com

LPA
LAWRENCE PERRY & ASSOCIATES
Consulting Engineers
15 E Salem Avenue SE, Suite 101
Roanoke, Virginia 24011
Ph: (540) 342-1816
Fax: (540) 344-3410
Comm. No.: 25114

© Lawrence Perry and Associates, Inc.

BEDFORD COUNTY SHERIFF'S OFFICE EXPANSION

SPECTRUM DESIGN PROJECT NO.: **24112**

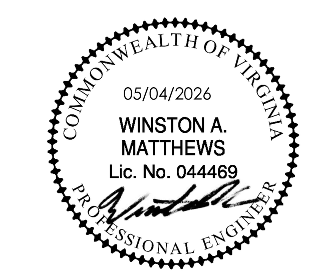

PROJ. MGR.: **RCH** CHECKED BY: **WAM** DRAWN BY: **MAS**

SHEET ISSUE DATE: **05.04.2026**

PROJECT PHASE: **BID DOCUMENTS**

SHEET REVISIONS:

PLAN NORTH SITE NORTH

SHEET NAME: **ELECTRICAL DETAILS**

SHEET NUMBER: **E002**

ORIGINAL SIZE : ARCH E1 (30X42) | 5/4/2026 3:38:51 PM
C:\Users\mas\OneDrive - Lawrence Perry And Associates\Documents\25114 - Bedford Sheriff's Office - ELEC - R26_msmithQTWNS.rvt

GROUNDING SCHEMATIC GENERAL NOTES:

1. ALL GROUND ROD CONNECTIONS SHALL BE EXOTHERMIC WELD. THE THREE (3) GROUND RODS SHOWN IN THE TRIAD SHALL BE 10 FEET APART, AND SHALL BE EXTERIOR TO THE BUILDING AS CLOSE TO THE SERVICE ENTRANCE EQUIPMENT WITH MAIN DISCONNECT SWITCHES) AS POSSIBLE.
2. ALL CONDUCTORS SHALL BE AS SHOWN, EXCEPT WHERE NEC ARTICLE 250 SPECIFICALLY REQUIRES OTHERWISE.
3. GROUNDING ELECTRODE CONDUCTORS SHALL BE IN CONDUIT WHEN REQUIRED BY NEC 250.64(B).
4. ALL GROUND BUSBARS SHALL BE PROVIDED WITH THE NECESSARY HARDWARE TO WALL MOUNT THEM. REFER TO SPECIFICATIONS FOR ADDITIONAL REQUIREMENTS FOR GROUND BUSBARS.
5. INSTALL A GROUND BAR ON COMMUNICATION PLYWOOD BACKBOARD USED FOR MOUNTING ADDITIONAL COMMUNICATION EQUIPMENT NOT INSTALLED IN THE COMMUNICATION RACKS. GROUND BAR BASIS OF DESIGN: HARGER MODEL GBI14412J (1/4"DX4"HX12"L).
6. REFER TO SPECIFICATIONS AND PROVIDE LABELS ON ALL GROUND ELECTRODE CONDUCTORS CONNECTED TO ELECTRICAL GROUND BAR MOUNTED BESIDE ATS-EH TO INDICATED ORIGIN OF CONDUCTOR.
7. WHERE GROUND CONDUCTORS ARE NOT SIZED ON THIS PLAN REFER TO THE NEC FOR THE CODE REQUIRED SIZES.
8. REFER TO NEC ARTICLE 250 FOR ANY ADDITIONAL CODE REQUIRED GROUNDING REQUIREMENTS NOT NOTED HERE.

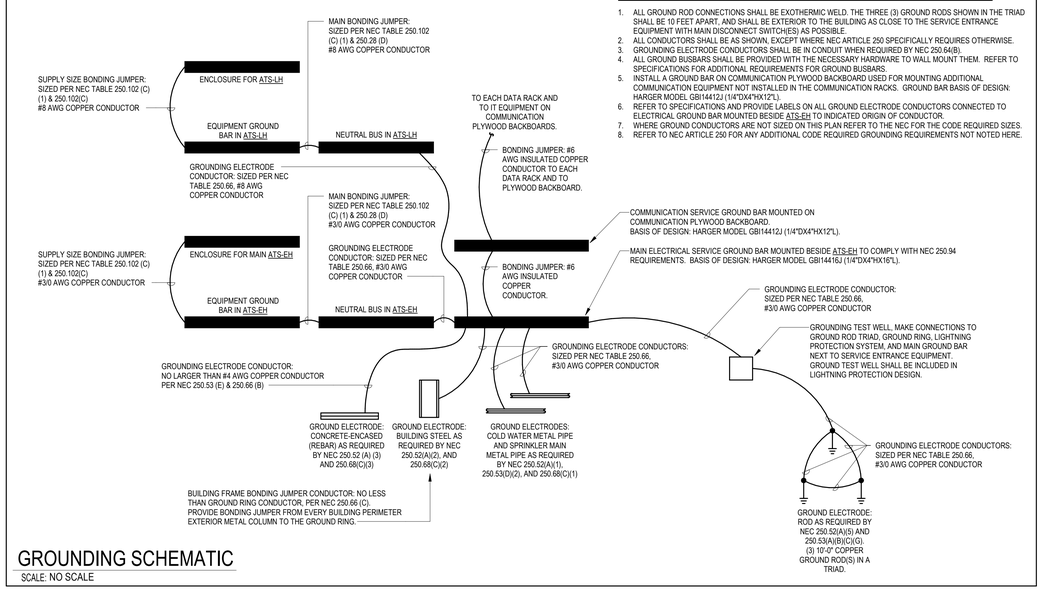

GROUNDING SCHEMATIC

SCALE: NO SCALE

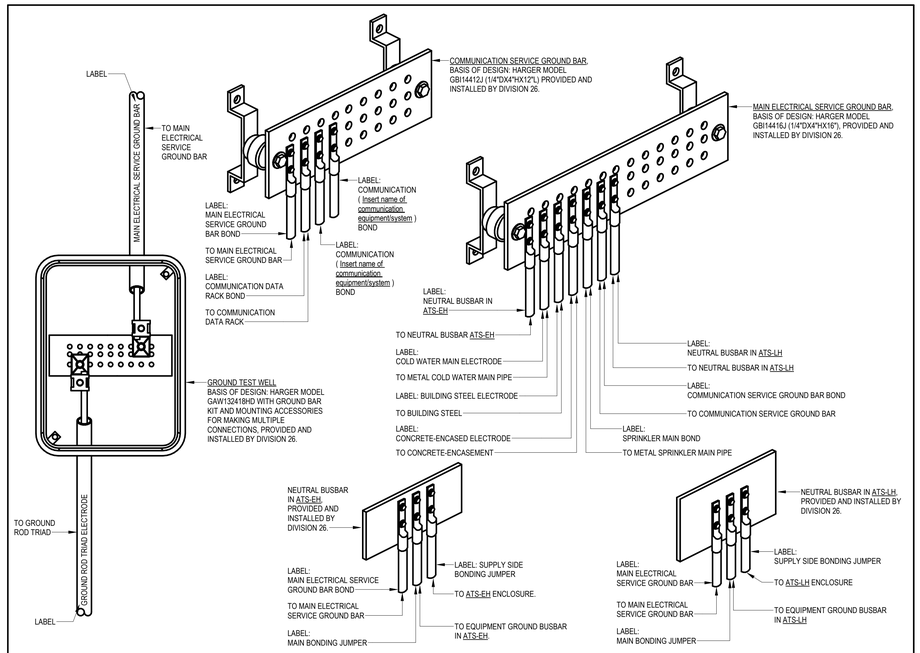

GROUND BARS AND GROUND TEST WELL DETAILS

SCALE: NONE

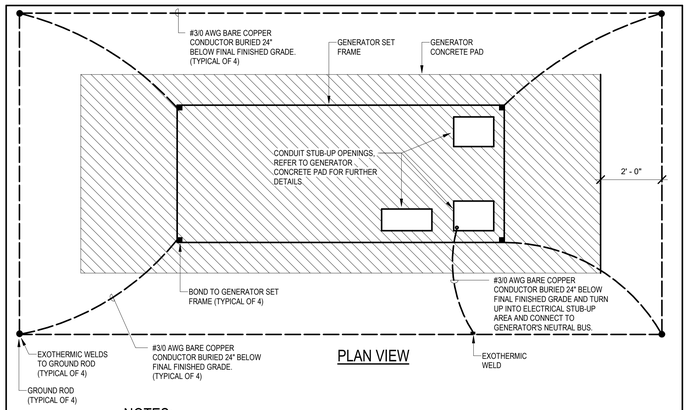

PLAN VIEW

NOTES:

1. GROUND RODS SHALL BE STEEL WITH COPPER WELDED EXTERIOR, 3/4" DIAMETER AND 10 FEET LONG. DRIVE EACH GROUND ROD VERTICALLY IN THE SOIL SO THE TOP OF THE GROUND ROD IS 2 FEET BELOW FINAL FINISHED GRADE LEVEL OR BELOW THE PERMANENT MOISTER LEVEL, WHICH EVER IS DEEPER. GROUND ROD SHALL BE INSTALLED SO THAT A MINIMUM OF 8 FEET OF THE 10 FEET LENGTH IS IN CONTACT WITH SOIL, NOT ROCK.
2. UTILIZE AN EXOTHERMIC WELDING PROCESS TO CONNECT THE GROUND CONDUCTORS TO THE GROUND RODS ALONG WITH ANY OTHER UNDERGROUND, INACCESSIBLE, OR CONCEALED GROUNDING CONNECTIONS.

GENERATOR GROUNDING DETAIL

SCALE: NONE

SPECTRUM DESIGN
architects | engineers

Plaza Suite 1
10 Church Avenue, SE
Roanoke, VA 24011

540.342.6001
spectrumpc.com

LPA
LAWRENCE PERRY & ASSOCIATES
Consulting Engineers

15 E Salem Avenue SE, Suite 101
Roanoke, Virginia 24011

Ph: (540)-342-1816
Fax: (540)-344-3410

Comm. No.: 25114

© Lawrence Perry and Associates, Inc.

BEDFORD COUNTY SHERIFF'S OFFICE EXPANSION

SPECTRUM DESIGN PROJECT NO.: **24112**

COMMONWEALTH OF VIRGINIA
05/04/2026
WINSTON A. MATTHEWS
Lic. No. 044469
PROFESSIONAL ENGINEER

PROJ. MGR.:	CHECKED BY:	DRAWN BY:
RCH	WAM	MAS

SHEET ISSUE DATE:
05.04.2026

PROJECT PHASE:
BID DOCUMENTS

SHEET REVISIONS:

PLAN NORTH SITE NORTH

SHEET NAME:
ELECTRICAL GROUNDING SCHEMATICS

SHEET NUMBER:
E003

ORIGINAL SIZE - ARCH E | [30x42] | 5/4/2026 3:38:32 PM
C:\Users\mas\OneDrive - Lawrence Perry And Associates\Documents\25114 - Bedford Sheriff's Office - EEC - R26_mas\mas24wx3.rvt

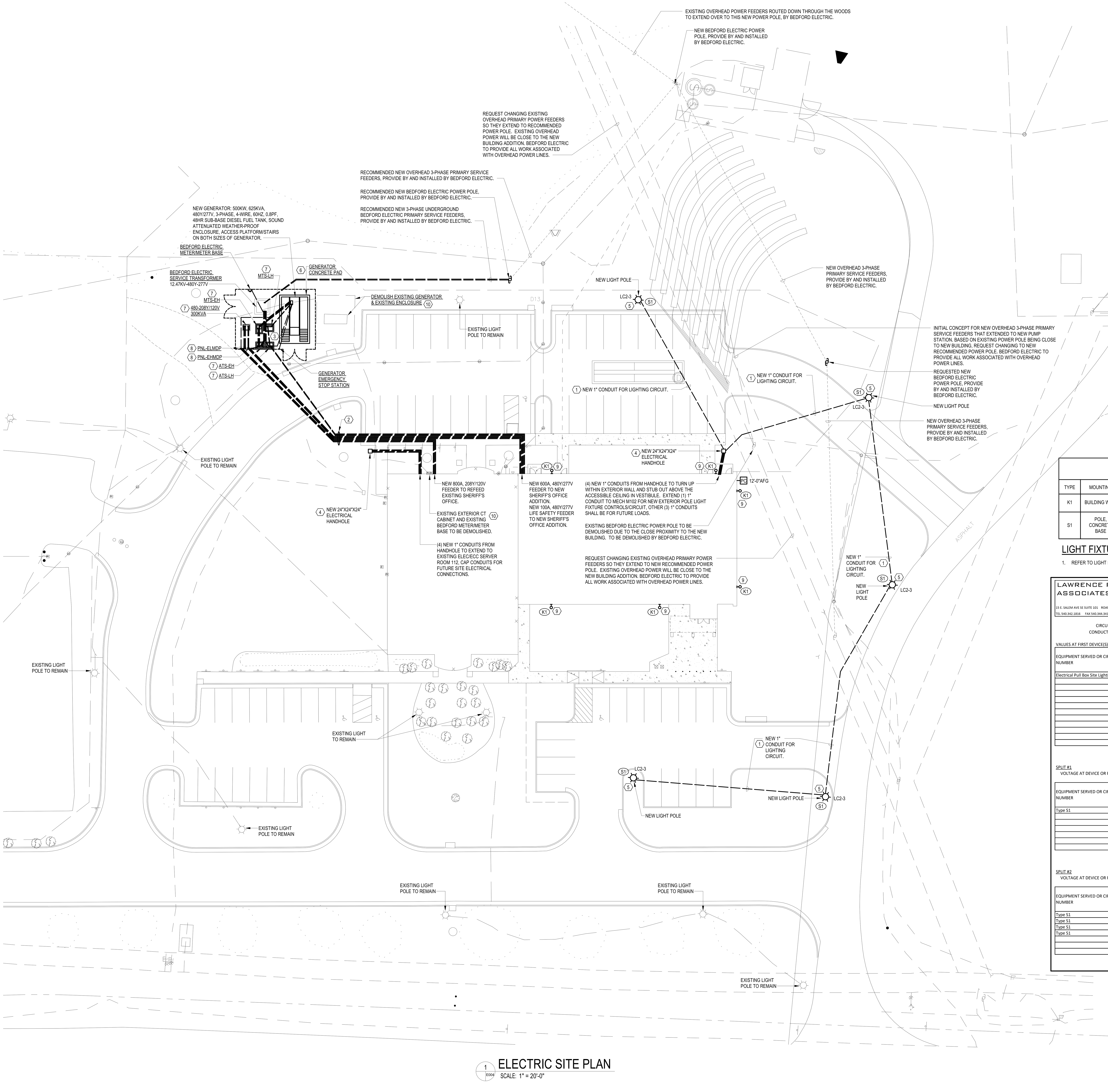

1 E004 ELECTRIC SITE PLAN
SCALE: 1" = 20'-0"

PLAN NOTES: (#)

1. ALL NEW EXTERIOR LIGHTING BRANCH CIRCUITS SHALL BE INSTALLED A MINIMUM OF 24" BELOW FINAL FINISHED GRADE TO TOP OF CONDUITS. REFER TO SHEET E102 FOR EXTERIOR LIGHTING CONTACTOR DETAIL FOR CIRCUITS TO ALL NEW EXTERIOR LIGHT FIXTURES. SEE BELOW FOR BRANCH CIRCUIT VOLTAGE DROP CALCULATIONS FOR SIZE OF WIRING BETWEEN EACH SITE POLE LIGHT AND TO LIGHTING CONTACTOR.
2. REFER TO NEW ELECTRICAL RISER DIAGRAM ON SHEET E502 FOR SIZE AND QUANTITY OF UNDERGROUND FEEDERS AND SPARE CONDUITS FROM NEW ELECTRICAL YARD TO BUILDING. ALL CONDUITS SHALL BE BURIED A MINIMUM OF 36" BELOW FINAL FINISHED GRADE.
3. REFER TO NEW ELECTRICAL RISER DIAGRAM ON SHEET E502 FOR SIZE AND QUANTITY OF UNDERGROUND FEEDERS AND SPARE CONDUITS IN NEW ELECTRICAL YARD. ALL CONDUITS SHALL BE BURIED A MINIMUM OF 36" BELOW FINAL FINISHED GRADE.
4. REFER TO SHEET E002 FOR 24"X24"X24" MANHOLE DETAIL.
5. REFER TO SHEET E002 FOR LIGHT FIXTURE CONCRETE POLE BASE DETAIL.
6. REFER TO SHEET E002 FOR GENERATOR CONCRETE PAD DETAIL.
7. REFER TO SHEET E002 FOR ELECTRICAL EQUIPMENT CONCRETE PAD DETAIL.
8. ELECTRICAL CONTRACTOR TO PROVIDE (2) PRESSURE TREATED 4"X4" POSTS TO BE INSTALLED ON CONCRETE BASES THAT IS 24" IN DIAMETER, 48" DEEP, AND EXTENDS 6" ABOVE FINISHED GRADE. PROVIDE CONCRETE POST ANCHORS ON TOP OF THE CONCRETE BASES FOR 4"X4" POSTS TO ATTACH TO THE CONCRETE BASES. PROVIDE THE NECESSARY PRESSURE TREATED LUMBER REQUIRED BETWEEN THE TWO POSTS FOR PANELS EHMDP AND ELMDP TO MOUNT TO.
9. REFER TO SHEET E101 FOR CIRCUITING INFORMATION ON TYPE K1 BUILDING MOUNTED LIGHT FIXTURES.
10. DEMOLITION OF EXISTING GENERATOR AND EXISTING UTILITY SERVICES SHALL ONLY BE STARTED/COMPLETED AFTER NEW GENERATOR AND ALL OTHER NEW ELECTRICAL EQUIPMENT AND NEW ELECTRICAL SERVICE IN THE NEW ELECTRICAL YARD HAS BEEN INSTALLED AND IS OPERATIONAL.

LIGHTING CONTROLS - SEQUENCE OF OPERATIONS (ROOM BY ROOM):

1. EXTERIOR BUILDING MOUNTED, EXTERIOR BUILDING CANOPY, AND POLE MOUNTED LIGHT FIXTURES:
   A. EMERGENCY EGRESS EXTERIOR LIGHTS: THE EXTERIOR LIGHT FIXTURES SHALL BE CONNECTED THROUGH A H-O-A SWITCH, LIGHTING CONTACTOR, EXTERIOR PHOTOSENSOR, AND LIGHTING LOAD CONTROLLERS. REFER TO LIGHT CONTACTOR DETAIL ON SHEET E102. WHEN THE HOA SWITCH IS SET TO "A", THE EXTERIOR LIGHTS WILL BE AUTOMATICALLY CONTROLLED BY THE PHOTOCELL TURNING EXTERIOR LIGHTS ON AT DUSK AND OFF AT DAWN. WHEN THE HOA SWITCH IS SET TO "H", THE EXTERIOR LIGHTS WILL BE MANUALLY TURNED ON AND STAY ON UNTIL SWITCHED TO EITHER "O" OR "A". WHEN THE HOA SWITCH IS SET TO "O", THE EXTERIOR LIGHTS WILL BE MANUALLY TURNED OFF AND STAY OFF UNTIL SWITCHED TO EITHER "H" OR "A".
      a. PROVIDE A UL924 AUTOMATIC LOAD CONTROL RELAY FOR THE EMERGENCY EGRESS EXTERIOR LIGHTING CIRCUIT. WIRE SO THAT THE SENSING CIRCUIT IS CONNECTED TO THE NEAREST NORMAL POWER LIGHTING CIRCUIT VIA THE HOMERUN (AHEAD OF ANY SWITCHING/DIMMING CONTROLS). IF THE NORMAL POWER CIRCUIT IS LOST THE EMERGENCY EGRESS EXTERIOR LIGHT FIXTURES WILL AUTOMATICALLY TURN ON OVERRIDING THE LIGHTING CONTACTOR CONTROLS TO THE EMERGENCY EGRESS EXTERIOR LIGHT FIXTURES.

SITE LIGHT FIXTURE SCHEDULE

TYPE	MOUNTING	LAMP TYPE	MANUFACTURE & CATALOG NUMBER (BASIS OF DESIGN	REMARKS
K1	BUILDING WALL	-	-	REFER TO MAIN BUILDING LIGHT FIXTURE SCHEDULE ON SHEET E102.
S1	POLE, CONCRETE BASE	17,000 LUMEN LED	LIGHT HEAD: GARDCO: OPF-S-A05-840-T5W-AR1-UNV LIGHT POLE: VALMOUNT: DS330-500W300-FBC-AB	COLOR FINISHES AS SELECTED BY OWNER AND ARCHITECT. MOUNT LIGHT FIXTURE AT 29'-6" ABOVE FINISHED GRADE

LIGHT FIXTURE SCHEDULE NOTES:

1. REFER TO LIGHT FIXTURE SCHEDULE NOTES ON SHEET E102.

LAWRENCE PERRY AND ASSOCIATES, INC.
15 E. SALEM AVE SE SUITE 101 ROANOKE, VA 24011
TEL 540.342.1816 FAX 540.344.3410

VOLTAGE DROP CALCULATIONS - CASCADING

PROJECT: BEDFORD COUNTY SHERIFF'S OFFICE EXPANSION
DATE: 3/16/2026 ENGINEER: WAM
COMM NO: 25114 PAGE # 1

CIRCUIT VOLTS 277.V (NOTE: CIRCUIT IS ASSUMED TO BE SINGLE PHASE)
CONDUCTOR TYPE 1 (1 = CU, 2 = AL)

VALUES AT FIRST DEVICE(S) OR FIXTURE(S) IN CASCADE

EQUIPMENT SERVED OR CIRCUIT NUMBER	VOLTAGE AT DEVICE OR FIXTURE (V)	LOAD AT DEVICE OR FIXTURE (KVA)	DISTANCE TO DEVICE OR FIXTURE (FT)	CONDUCTOR SIZE USED (AWG OR KCMIL)	RESULTS FOR SELECTED CONDUCTOR SIZE: VOLTS DROP	% VOLTS DROP	FINAL VOLTAGE
Electrical Pull Box Site Lighting	277.V	0.580	122.5	12	.99V	0.36%	276.01V
				TOTAL VALUES AT FINAL DEVICE OR FIXTURE:	.99V	0.36%	276.01V

SPLIT #1
VOLTAGE AT DEVICE OR FIXTURE: 276.01V (ENTER VALUE FROM ABOVE AT SPLIT LOCATION)

EQUIPMENT SERVED OR CIRCUIT NUMBER	VOLTAGE AT DEVICE OR FIXTURE (V)	LOAD AT DEVICE OR FIXTURE (KVA)	DISTANCE TO DEVICE OR FIXTURE (FT)	CONDUCTOR SIZE USED (AWG OR KCMIL)	RESULTS FOR SELECTED CONDUCTOR SIZE: VOLTS DROP	% VOLTS DROP	FINAL VOLTAGE
Type S1	276.01V	0.116	122.5	12	.2V	0.07%	275.81V
				TOTAL VALUES AT FINAL DEVICE OR FIXTURE:	.2V	0.43%	275.81V

SPLIT #2
VOLTAGE AT DEVICE OR FIXTURE: 276.01V (ENTER VALUE FROM ABOVE AT SPLIT LOCATION)

EQUIPMENT SERVED OR CIRCUIT NUMBER	VOLTAGE AT DEVICE OR FIXTURE (V)	LOAD AT DEVICE OR FIXTURE (KVA)	DISTANCE TO DEVICE OR FIXTURE (FT)	CONDUCTOR SIZE USED (AWG OR KCMIL)	RESULTS FOR SELECTED CONDUCTOR SIZE: VOLTS DROP	% VOLTS DROP	FINAL VOLTAGE
Type S1	276.01V	0.464	113.5	12	.73V	0.27%	275.28V
Type S1	275.28V	0.348	133.5	12	.65V	0.24%	274.63V
Type S1	274.63V	0.232	152.5	12	.49V	0.18%	274.14V
Type S1	274.14V	0.116	135.5	12	.22V	0.08%	273.92V
				TOTAL VALUES AT FINAL DEVICE OR FIXTURE:	2.09V	1.11%	273.92V

0 10' 20' 40'
SCALE: 1" = 20'

SPECTRUM DESIGN
architects | engineers
Plaza Suite 1
10 Church Avenue, SE
Roanoke, VA 24011
540.342.6001
spectrumpc.com

L P A
LAWRENCE PERRY & ASSOCIATES
Consulting Engineers
15 E Salem Avenue SE, Suite 101
Roanoke, Virginia 24011
Ph: (540) 342-1816
Fax: (540) 344-3410
Comm. No.: 25114
© Lawrence Perry and Associates, Inc.

BEDFORD COUNTY SHERIFF'S OFFICE EXPANSION

SPECTRUM DESIGN PROJECT NO.: **24112**

COMMONWEALTH OF VIRGINIA
05/04/2026
WINSTON A. MATTHEWS
Lic. No. 044469
PROFESSIONAL ENGINEER

PROJ. MGR.: **RCH** CHECKED BY: **WAM** DRAWN BY: **MAS**

SHEET ISSUE DATE:
05.04.2026

PROJECT PHASE:
BID DOCUMENTS

SHEET REVISIONS:

PLAN NORTH SITE NORTH

SHEET NAME:
ELECTRIC SITE PLAN

SHEET NUMBER:
E004

ORIGINAL SIZE : ARCH E1 (30X42) | 5/4/2026 3:38:53 PM
C:\Users\mas\OneDrive - Lawrence Perry And Associates\Documents\25114 - Bedford Sheriff's Office - ELEC - R26_msmithQTWNS.rvt

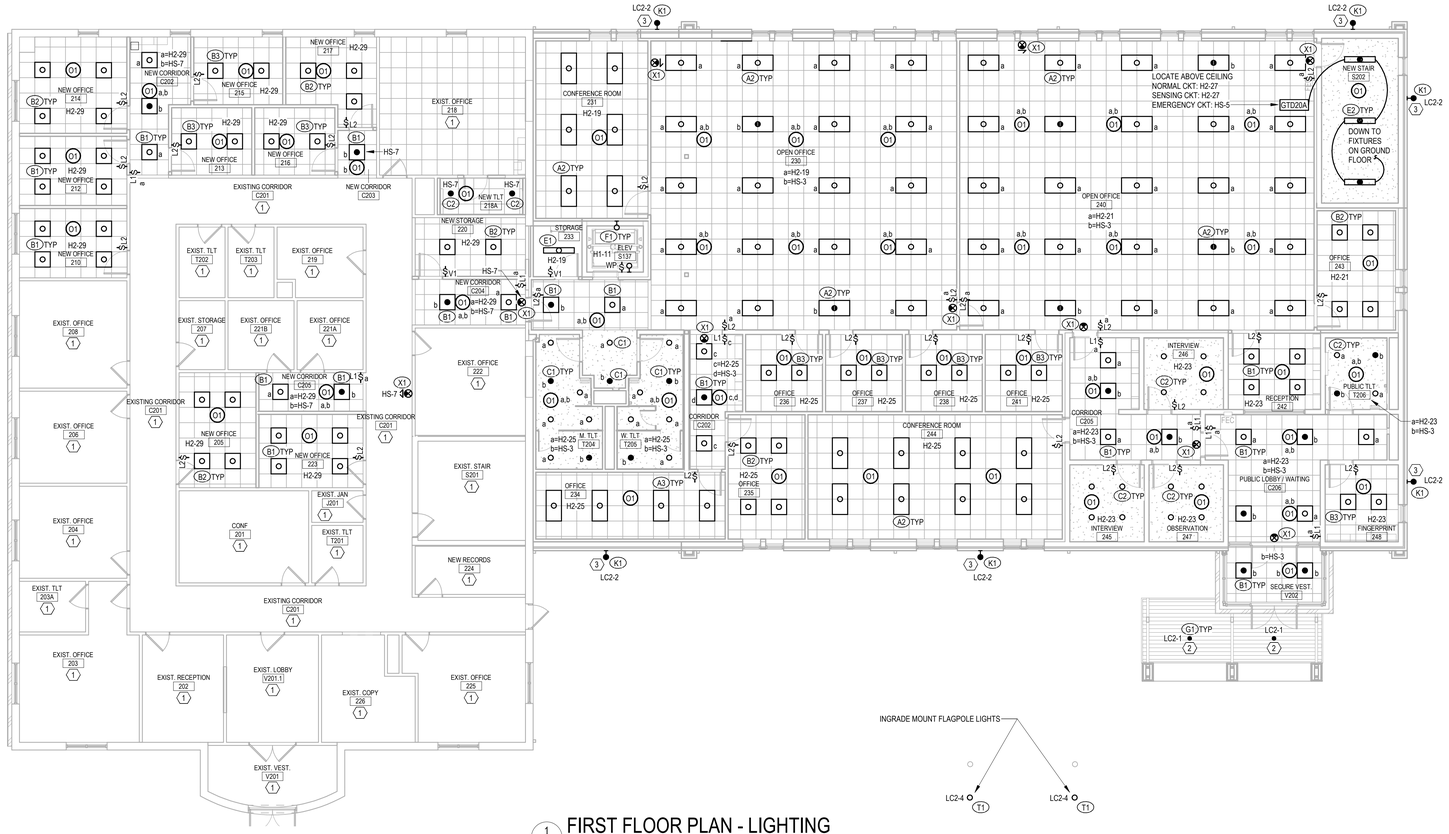

1 E101 FIRST FLOOR PLAN - LIGHTING
SCALE: 1/8" = 1'-0"

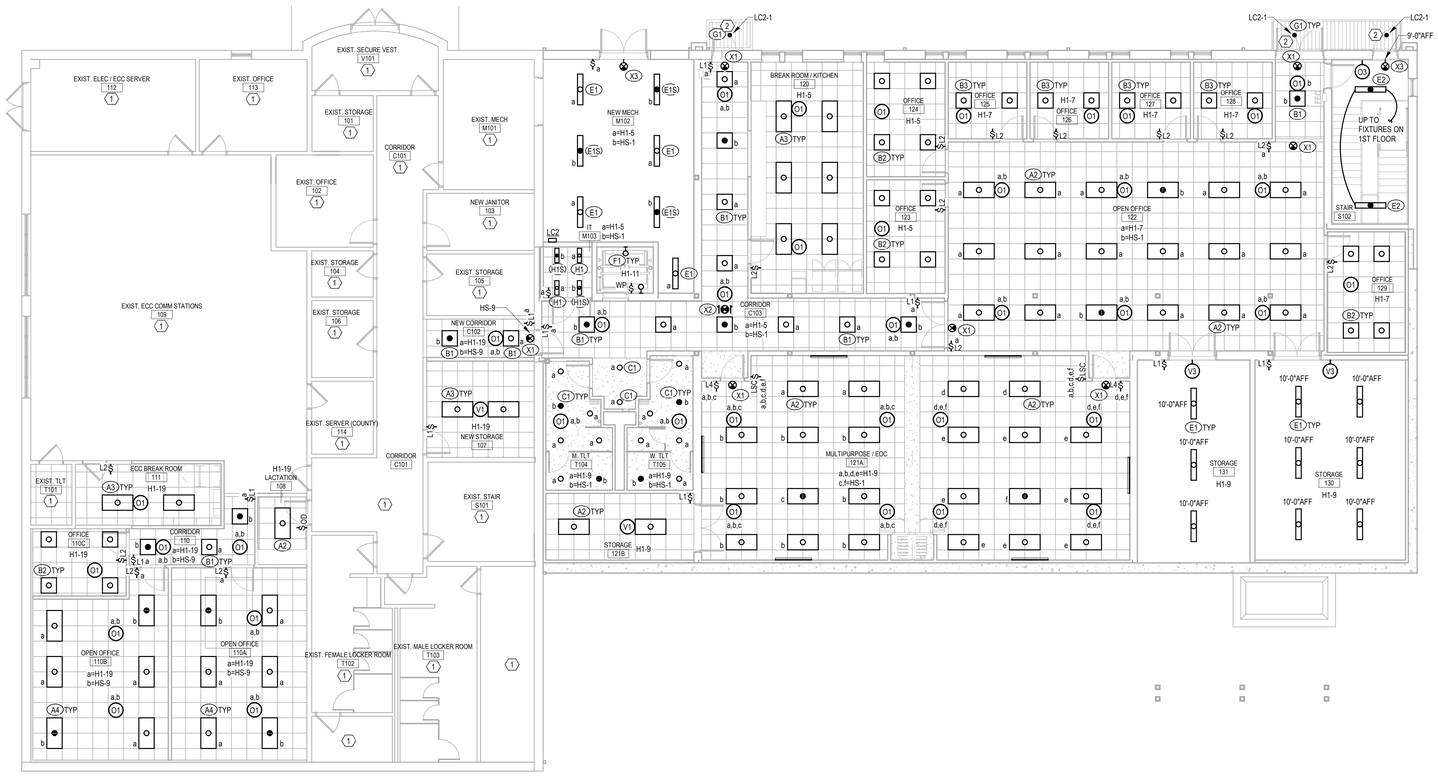

2 E101 GROUND FLOOR PLAN - LIGHTING
SCALE: 1/8" = 1'-0"

GENERAL NOTES:

1. REFER TO SHEET E102 FOR LIGHTING CONTROLS - SEQUENCE OF OPERATIONS.
2. ALL NEW EXIT SIGNS ON THE GROUND FLOOR IN NEW BUILDING ADDITION AND NEW CORRIDOR C204 ARE TO BE POWERED FROM CIRCUIT HS-1.
3. ALL NEW EXIT SIGNS ON THE FIRST FLOOR IN NEW BUILDING ADDITION ARE TO BE POWERED FROM CIRCUIT HS-3.
4. ALL NEW EXIT SIGNS ON THE FIRST FLOOR IN THE EXISTING SIDE OF THE BUILDING ARE TO BE POWERED FROM CIRCUIT HS-7.

PLAN NOTES: (#)

1. ALL EXISTING LIGHTING AND LIGHTING CONTROLS IN THIS ROOM/SPACE SHALL REMAIN AS INSTALLED.
2. REFER TO LIGHTING CONTACTOR "LC2" ON SHEET E102 FOR CIRCUIT INFORMATION FOR EXTERIOR CANOPY MOUNTED FIXTURES.
3. REFER TO LIGHTING CONTACTOR "LC2" ON SHEET E102 FOR CIRCUIT INFORMATION FOR EXTERIOR BUILDING MOUNTED FIXTURES.

SPECTRUM DESIGN
architects | engineers

Plaza Suite 1
10 Church Avenue, SE
Roanoke, VA 24011

540.342.6001
spectrumpc.com

LPA
LAWRENCE PERRY & ASSOCIATES
Consulting Engineers
15 E Salem Avenue SE, Suite 101
Roanoke, Virginia 24011
Ph: (540).342-1816
Fax: (540).344-3410
Comm. No.: 25114

© Lawrence Perry and Associates, Inc.

BEDFORD COUNTY SHERIFF'S OFFICE EXPANSION

SPECTRUM DESIGN PROJECT NO.: **24112**

COMMONWEALTH OF VIRGINIA
05/04/2026
WINSTON A. MATTHEWS
Lic. No. 044489
PROFESSIONAL ENGINEER

PROJ. MGR.: **RCH**
CHECKED BY: **WAM**
DRAWN BY: **MAS**

SHEET ISSUE DATE:
05.04.2026

PROJECT PHASE:
BID DOCUMENTS

SHEET REVISIONS:

PLAN NORTH
SITE NORTH

SHEET NAME:
FLOOR PLANS - LIGHTING

SHEET NUMBER:
E101

0 4' 8' 16'
SCALE: 1/8" = 1' - 0"

ORIGINAL SIZE : ARCH E1 [30X42] | 5/4/2026 3:38:53 PM
C:\Users\mas\OneDrive - Lawrence Perry And Associates\Documents\25114 - Bedford Sheriff's Office - EEC - R24_mas\mas24wb.rvt

LIGHTING CONTROLS - SEQUENCE OF OPERATIONS (ROOM BY ROOM)

1. ECC BREAK ROOM 111, BREAK ROOM / KITCHEN 120, OFFICE 110C, 123, 124, 125, 126, 127, 128, 129, 234, 235, 236, 237, 238, 241, 243, NEW OFFICE 205, 210, 212, 213, 214, 215, 216, 217, 223, CONFERENCE ROOM 231, 244, RECEPTION 242, INTERVIEW 245, 246, OBSERVATION 247:
   A. GENERAL LIGHTS: THE LIGHT FIXTURES SHALL AUTOMATICALLY TURN ON TO 50% LIGHT LEVELS WHEN ENTERING THE ROOM. THE LIGHT FIXTURES SHALL AUTOMATICALLY TURN OFF WHEN THE ROOM IS VACANT FOR 15 MINUTES, UNLESS MANUALLY TURNED OFF. SET THE TIME DELAY ON THE OCCUPANCY SENSOR(S) TO 15 MINUTES. THE LIGHT FIXTURES CAN MANUALLY BE TURNED ON/OFF/RAISED/DIMMED VIA THE $L2 WALL DIMMER.
   B. AUTOMATIC RECEPTACLE CONTROL: THE CONTROLLED RECEPTACLES, INDICATED WITH A "C" LABEL ON SHEET E201, IN THIS SPACE SHALL BE CONTROLLED BY CEILING MOUNTED LOW-VOLTAGE OCCUPANCY SENSORS (SAME SENSORS AS FOR THE LIGHT FIXTURES). THE CONTROLLED RECEPTACLES SHALL AUTOMATICALLY TURN ON WHEN ENTERING THE ROOM. THE CONTROLLED RECEPTACLES SHALL AUTOMATICALLY TURN OFF WHEN THE ROOM IS VACANT FOR 15 MINUTES. SET THE TIME DELAY ON THE OCCUPANCY SENSOR(S) TO 15 MINUTES. CONTRACTOR TO PROVIDE A LOAD CONTROL RELAY FOR THE CIRCUIT TO THE CONTROLLED RECEPTACLES.
2. FINGERPRINT 248:
   A. GENERAL LIGHTS: THE LIGHT FIXTURES SHALL AUTOMATICALLY TURN ON TO 50% LIGHT LEVELS WHEN ENTERING THE ROOM. THE LIGHT FIXTURES SHALL AUTOMATICALLY TURN OFF WHEN THE ROOM IS VACANT FOR 15 MINUTES, UNLESS MANUALLY TURNED OFF. SET THE TIME DELAY ON THE OCCUPANCY SENSOR TO 15 MINUTES. THE LIGHT FIXTURES CAN MANUALLY BE TURNED ON/OFF/RAISED/DIMMED VIA THE $L2 WALL DIMMER.
3. MULTIPURPOSE / EOC 121A:
   A. GENERAL LIGHTS: THE "a,b,d,e" LIGHT FIXTURE(S) SHALL AUTOMATICALLY TURN ON TO 50% LIGHT LEVELS WHEN ENTERING THE ROOM. THE "a,b,d,e" LIGHT FIXTURE(S) SHALL AUTOMATICALLY TURN OFF WHEN THE ROOM IS VACANT FOR 15 MINUTES, UNLESS MANUALLY TURNED OFF. SET THE TIME DELAY ON THE OCCUPANCY SENSOR(S) TO 15 MINUTES. WHEN THE PARTITION IS CLOSED, THE "a,b,d,e" LIGHT FIXTURE(S) CAN BE MANUALLY TURNED ON/OFF/RAISED/DIMMED VIA THE RESPECTIVE $L4 WALL DIMMERS IN EACH ROOM; EACH ZONE WILL BE CONTROLLED INDIVIDUALLY. WHEN THE PARTITION IS OPENED, THE FOLLOWING ZONES WILL BE CONTROLLED SIMULTANEOUSLY BY EITHER $L4 WALL DIMMER: "a" AND "d", "b" AND "e"; EACH PAIR OF ZONES WILL BE CONTROLLED INDIVIDUALLY.
   B. EMERGENCY EGRESS LIGHTS: THE "c,f" EMERGENCY EGRESS LIGHT FIXTURE(S) SHALL AUTOMATICALLY TURN ON WHEN ENTERING THE ROOM. THE "c,f" EMERGENCY EGRESS LIGHT FIXTURE(S) SHALL AUTOMATICALLY TURN OFF WHEN THE ROOM IS VACANT FOR 15 MINUTES. SET THE TIME DELAY ON THE OCCUPANCY SENSOR(S) TO 15 MINUTES. THE "c,f" EMERGENCY EGRESS LIGHT FIXTURE(S) CAN MANUALLY BE RAISED TO 100% LIGHT LEVELS OR DIMMED NO LOWER THAN 70% LIGHT LEVELS VIA THE RESPECTIVE $L4 WALL DIMMERS IN EACH ROOM. WHEN THE PARTITION IS CLOSED, EACH ZONE WILL BE CONTROLLED INDIVIDUALLY VIA THEIR RESPECTIVE DIMMER. WHEN THE PARTITION IS OPENED, THE "c" AND "f" ZONES WILL BE CONTROLLED SIMULTANEOUSLY VIA BOTH $L4 WALL DIMMERS. DIMMERS WILL NOT BE ABLE TO TURN EMERGENCY EGRESS LIGHT FIXTURE(S) OFF, ONLY THE OCCUPANCY SENSOR(S) CAN TURN THE EMERGENCY EGRESS LIGHT FIXTURE(S) OFF AND ONLY WHEN THE ROOM IS VACANT.
      a. PROVIDE A UL924 AUTOMATIC LOAD CONTROL RELAY FOR THE EMERGENCY EGRESS LIGHTING FIXTURES. WIRE SO THAT THE SENSING CIRCUIT IS CONNECTED TO THE NEAREST NORMAL POWER LIGHTING CIRCUIT VIA THE HOMERUN (AHEAD OF ANY CONTROLS). IF THE NORMAL POWER CIRCUIT IS LOST THE EMERGENCY EGRESS LIGHT FIXTURES WILL AUTOMATICALLY TURN ON OVERRIDING ANY OCCUPANCY SENSOR CONTROLS TO THE EMERGENCY EGRESS LIGHT FIXTURES.
   C. SCENE CONTROLLER PLAN WEST (PARTITION CLOSED): THE $LSC IS A SCENE CONTROLLER WITH 5 BUTTONS. THE TOP THREE BUTTONS WILL BE PRE-PROGRAMMED SCENES, SEE BELOW. THE 4TH BUTTON IS ALL ZONES "ON" BUTTON AND THE 5TH BUTTON IS ALL ZONES "OFF" BUTTON. NOTE THAT IF ROOM IS OCCUPIED WHEN PRESSING THE "OFF" BUTTON ALL LIGHT ZONES SHALL TURN OFF EXCEPT ZONE "c" (EMERGENCY EGRESS ZONE) SHALL DIM DOWN TO 70% UNTIL THE ROOM HAS BEEN VACANT FOR 15 MINUTES.
      a. BUTTON 1 - PRESENTATION: ZONE "a" WILL BE RAISED/DIMMED TO 10%, ZONE "b" WILL BE RAISED/DIMMED TO 50%, ZONE "c" WILL BE RAISED/DIMMED 70%.
      b. BUTTON 2 - 50% DIM: ZONES "a,b" WILL BE RAISED/DIMMED TO 50%, ZONE "c" WILL BE RAISED/DIMMED TO 70%.
      c. BUTTON 3 - 10% DIM: ZONES "a,b" WILL BE RAISED/DIMMED TO 10%, ZONE "c" WILL BE RAISED/DIMMED TO 70%.
   D. SCENE CONTROLLER PLAN EAST (PARTITION CLOSED): THE $LSC IS A SCENE CONTROLLER WITH 5 BUTTONS. THE TOP THREE BUTTONS WILL BE PRE-PROGRAMMED SCENES, SEE BELOW. THE 4TH BUTTON IS ALL ZONES "ON" BUTTON AND THE 5TH BUTTON IS ALL ZONES "OFF" BUTTON. NOTE THAT IF ROOM IS OCCUPIED WHEN PRESSING THE "OFF" BUTTON ALL LIGHT ZONES SHALL TURN OFF EXCEPT ZONE "f" (EMERGENCY EGRESS ZONE) SHALL DIM DOWN TO 70% UNTIL THE ROOM HAS BEEN VACANT FOR 15 MINUTES.
      a. BUTTON 1 - PRESENTATION: ZONE "d" WILL BE RAISED/DIMMED TO 10%, ZONE "e" WILL BE RAISED/DIMMED TO 50%, ZONE "f" WILL BE RAISED/DIMMED 70%.
      b. BUTTON 2 - 50% DIM: ZONES "d,e" WILL BE RAISED/DIMMED TO 50%, ZONE "f" WILL BE RAISED/DIMMED TO 70%.
      c. BUTTON 3 - 10% DIM: ZONES "d,e" WILL BE RAISED/DIMMED TO 10%, ZONE "f" WILL BE RAISED/DIMMED TO 70%.
   E. SCENE CONTROLLER (PARTITION OPENED): WHEN THE PARTITION IS OPENED, BOTH SCENE CONTROLLERS WILL CONTROL THE FOLLOWING ZONES SIMULTANEOUSLY: "a" AND "d", "b" AND "e", "c" AND "f". THE PRESET SCENES WILL REMAIN THE SAME AS WHEN THE PARTITION IS CLOSED.
4. LACTATION 108:
   A. GENERAL LIGHTS: THE LIGHT FIXTURES SHALL AUTOMATICALLY TURN ON TO 50% LIGHT LEVELS WHEN ENTERING THE ROOM. THE LIGHT FIXTURES SHALL AUTOMATICALLY TURN OFF WHEN THE ROOM IS VACANT FOR 15 MINUTES, UNLESS MANUALLY TURNED OFF. SET THE TIME DELAY ON THE OCCUPANCY SENSOR TO 15 MINUTES. THE LIGHT FIXTURES CAN MANUALLY BE TURNED ON/OFF/RAISED/DIMMED VIA THE $OD COMBINATION WALL MOUNTED SENSOR/DIMMER.
5. M TLT T104, W TLT T105, M TLT T204, W TLT T205, PUBLIC TLT T206:
   A. GENERAL LIGHTS: ALL "a" LIGHT FIXTURES SHALL AUTOMATICALLY TURN ON WHEN ENTERING THE ROOM. THE "a" LIGHT FIXTURES SHALL AUTOMATICALLY TURN OFF WHEN THEN ROOM IS VACANT FOR 15 MINUTES, UNLESS MANUALLY TURNED OFF. SET THE TIME DELAY ON THE OCCUPANCY SENSOR TO 15 MINUTES. THE "a" LIGHT FIXTURES CAN ONLY BE TURNED ON/OFF VIA THE CEILING MOUNTED OCCUPANCY SENSOR, NO LOW-VOLTAGE WALL CONTROLS FOR THESE LIGHT FIXTURES.
   B. EMERGENCY EGRESS LIGHTS: ALL "b" EMERGENCY EGRESS LIGHT FIXTURES SHALL AUTOMATICALLY TURN ON WHEN ENTERING THE ROOM. THE "b" EMERGENCY EGRESS LIGHT FIXTURES SHALL AUTOMATICALLY TURN OFF WHEN THEN ROOM IS VACANT FOR 15 MINUTES, UNLESS MANUALLY TURNED OFF. SET THE TIME DELAY ON THE OCCUPANCY SENSOR TO 15 MINUTES. THE "b" EMERGENCY EGRESS LIGHT FIXTURES CAN ONLY BE TURNED ON/OFF VIA THE CEILING MOUNTED OCCUPANCY SENSOR, NO LOW-VOLTAGE WALL CONTROLS FOR THESE EMERGENCY EGRESS LIGHT FIXTURES.
      a. PROVIDE A UL924 AUTOMATIC LOAD CONTROL RELAY FOR THE EMERGENCY EGRESS LIGHTING FIXTURES. WIRE SO THAT THE SENSING CIRCUIT IS CONNECTED TO THE NEAREST NORMAL POWER LIGHTING CIRCUIT VIA THE HOMERUN (AHEAD OF ANY CONTROLS). IF THE NORMAL POWER CIRCUIT IS LOST THE EMERGENCY EGRESS LIGHT FIXTURES WILL AUTOMATICALLY TURN ON OVERRIDING ANY OCCUPANCY SENSOR CONTROLS TO THE EMERGENCY EGRESS LIGHT FIXTURES.
6. NEW TLT 218A:
   A. EMERGENCY EGRESS LIGHTS: ALL EMERGENCY EGRESS LIGHT FIXTURES SHALL AUTOMATICALLY TURN ON WHEN ENTERING THE ROOM. THE LIGHT FIXTURES SHALL AUTOMATICALLY TURN OFF WHEN THEN ROOM IS VACANT FOR 15 MINUTES, UNLESS MANUALLY TURNED OFF. SET THE TIME DELAY ON THE OCCUPANCY SENSOR TO 15 MINUTES. THE EMERGENCY EGRESS LIGHT FIXTURES CAN ONLY BE TURNED ON/OFF VIA THE CEILING MOUNTED OCCUPANCY SENSOR, NO LOW-VOLTAGE WALL CONTROLS FOR THESE EMERGENCY EGRESS LIGHT FIXTURES.
      a. PROVIDE A UL924 AUTOMATIC LOAD CONTROL RELAY FOR THE EMERGENCY EGRESS LIGHTING FIXTURES. WIRE SO THAT THE SENSING CIRCUIT IS CONNECTED TO THE NEAREST NORMAL POWER LIGHTING CIRCUIT VIA THE HOMERUN (AHEAD OF ANY CONTROLS). IF THE NORMAL POWER CIRCUIT IS LOST THE EMERGENCY EGRESS LIGHT FIXTURES WILL AUTOMATICALLY TURN ON OVERRIDING ANY OCCUPANCY SENSOR CONTROLS TO THE EMERGENCY EGRESS LIGHT FIXTURES.
7. NEW MECH M102, IT M103:
   A. GENERAL LIGHTS: THE "a" LIGHT FIXTURE(S) WILL HAVE TO BE MANUALLY TURNED "ON/OFF" VIA THE $ TOGGLE WALL SWITCH.
   B. EMERGENCY EGRESS LIGHTS: THE "b" EMERGENCY EGRESS LIGHT FIXTURES IN THE MECHANICAL AND ELECTRICAL ROOMS SHALL AUTOMATICALLY TURN "ON" VIA THE INTEGRAL OCCUPANCY SENSOR IN EACH TYPE E1S OR H1S LIGHT FIXTURE. THE EMERGENCY EGRESS FIXTURES SHALL AUTOMATICALLY TURN OFF WHEN THE ROOM IS VACANT FOR 15 MINUTES. SET THE TIME DELAY ON THE OCCUPANCY SENSORS TO 15 MINUTES. THERE ARE NO MANUAL CONTROLS FOR THESE EGRESS LIGHT FIXTURES, ONLY TO BE CONTROLLED VIA THE INTEGRAL OCCUPANCY SENSORS.
      a. PROVIDE A UL924 AUTOMATIC LOAD CONTROL RELAY FOR THE EMERGENCY EGRESS LIGHTING FIXTURES. WIRE SO THAT THE SENSING CIRCUIT IS CONNECTED TO THE NEAREST NORMAL POWER LIGHTING CIRCUIT VIA THE HOMERUN (AHEAD OF CONTROLS). IF THE NORMAL POWER CIRCUIT IS LOST THE EMERGENCY EGRESS LIGHT FIXTURES WILL AUTOMATICALLY TURN ON OVERRIDING ANY OCCUPANCY SENSOR CONTROLS TO THE EMERGENCY EGRESS LIGHT FIXTURES.
8. NEW STORAGE 220, STORAGE 233:
   A. GENERAL LIGHTS: THE LIGHT FIXTURE(S) WILL HAVE TO BE MANUALLY TURNED ON WHEN ENTERING THE ROOM. THE LIGHT FIXTURE(S) WILL AUTOMATICALLY TURN OFF WHEN THE ROOM IS VACANT FOR 5 MINUTES, UNLESS MANUALLY TURNED OFF. SET THE TIME DELAY ON THE VACANCY SENSOR TO 5 MINUTES. THE LIGHT FIXTURE(S) CAN MANUALLY BE TURNED ON/OFF VIA THE $V1 COMBINATION WALL MOUNTED SENSOR/SWITCH.
9. NEW STORAGE 107, STORAGE 121B, 130, 131:
   A. GENERAL LIGHTS: THE LIGHT FIXTURE(S) WILL HAVE TO BE MANUALLY TURNED ON WHEN ENTERING THE ROOM. THE LIGHT FIXTURE(S) WILL AUTOMATICALLY TURN OFF WHEN THE ROOM IS VACANT FOR 5 MINUTES, UNLESS MANUALLY TURNED OFF. SET THE TIME DELAY ON THE VACANCY SENSOR TO 5 MINUTES. THE LIGHT FIXTURE(S) CAN MANUALLY BE TURNED ON/OFF VIA THE $L1 WALL MOUNTED SWITCH.
10. STORAGE 130:
   A. GENERAL LIGHTS: THE LIGHT FIXTURE(S) WILL HAVE TO BE MANUALLY TURNED ON WHEN ENTERING THE ROOM. THE LIGHT FIXTURE(S) WILL AUTOMATICALLY TURN OFF WHEN THE ROOM IS VACANT FOR 15 MINUTES, UNLESS MANUALLY TURNED OFF. SET THE TIME DELAY ON THE VACANCY SENSOR TO 15 MINUTES. THE LIGHT FIXTURE(S) CAN MANUALLY BE TURNED ON/OFF VIA THE $L1 WALL MOUNTED SWITCH.
11. OPEN OFFICE 110A, 110B, 122, 230, 240:
   A. GENERAL LIGHTS: THE "a" LIGHT FIXTURES SHALL AUTOMATICALLY TURN ON TO 50% LIGHT LEVELS WHEN ENTERING THE ROOM. THE "a" LIGHT FIXTURES SHALL AUTOMATICALLY TURN OFF WHEN THE ROOM IS VACANT FOR 15 MINUTES, UNLESS MANUALLY TURNED OFF. SET THE TIME DELAY ON THE OCCUPANCY SENSOR TO 15 MINUTES. THE "a" LIGHT FIXTURES CAN MANUALLY BE TURNED ON/OFF/RAISED/DIMMED VIA THE $L2 WALL DIMMER(S).
   B. EMERGENCY EGRESS LIGHTS: ALL "b" EMERGENCY EGRESS LIGHT FIXTURES SHALL AUTOMATICALLY TURN ON WHEN ENTERING THE ROOM. THE "b" EMERGENCY EGRESS LIGHT FIXTURES SHALL AUTOMATICALLY TURN OFF WHEN THEN ROOM IS VACANT FOR 15 MINUTES, UNLESS MANUALLY TURNED OFF. SET THE TIME DELAY ON THE OCCUPANCY SENSOR TO 15 MINUTES. THE "b" EMERGENCY EGRESS LIGHT FIXTURES CAN ONLY BE TURNED ON/OFF VIA THE CEILING MOUNTED OCCUPANCY SENSOR, NO LOW-VOLTAGE WALL CONTROLS FOR THESE EMERGENCY EGRESS LIGHT FIXTURES.
      a. PROVIDE A UL924 AUTOMATIC LOAD CONTROL RELAY FOR THE EMERGENCY EGRESS LIGHTING FIXTURES. WIRE SO THAT THE SENSING CIRCUIT IS CONNECTED TO THE NEAREST NORMAL POWER LIGHTING CIRCUIT VIA THE HOMERUN (AHEAD OF ANY CONTROLS). IF THE NORMAL POWER CIRCUIT IS LOST THE EMERGENCY EGRESS LIGHT FIXTURES WILL AUTOMATICALLY TURN ON OVERRIDING ANY OCCUPANCY SENSOR CONTROLS TO THE EMERGENCY EGRESS LIGHT FIXTURES.
12. NEW CORRIDOR C102, C202, C203, C204, C205, CORRIDOR C103, C205, 110, PUBLIC LOBBY / WAITING C206, SECURE VEST V202:
   A. GENERAL LIGHTS: ALL "a" LIGHT FIXTURES SHALL AUTOMATICALLY TURN ON WHEN ENTERING THE CORRIDOR. THE "a" LIGHT FIXTURES SHALL AUTOMATICALLY TURN OFF WHEN THEN CORRIDOR IS VACANT FOR 15 MINUTES, UNLESS MANUALLY TURNED OFF. SET THE TIME DELAY ON THE OCCUPANCY SENSOR TO 15 MINUTES. THE "a" LIGHT FIXTURE(S) CAN MANUALLY BE TURNED ON/OFF VIA THE $L1 WALL MOUNTED SWITCH(ES).
   B. EMERGENCY EGRESS LIGHTS: ALL "b" EMERGENCY EGRESS LIGHT FIXTURES SHALL AUTOMATICALLY TURN ON WHEN ENTERING THE CORRIDOR. THE "b" EMERGENCY EGRESS LIGHT FIXTURES SHALL AUTOMATICALLY TURN OFF WHEN THEN CORRIDOR IS VACANT FOR 15 MINUTES, UNLESS MANUALLY TURNED OFF. SET THE TIME DELAY ON THE OCCUPANCY SENSOR TO 15 MINUTES. THE "b" EMERGENCY EGRESS LIGHT FIXTURES CAN ONLY BE TURNED ON/OFF VIA THE CEILING MOUNTED OCCUPANCY SENSOR, NO LOW-VOLTAGE WALL CONTROLS FOR THESE EMERGENCY EGRESS LIGHT FIXTURES.
      a. PROVIDE A UL924 AUTOMATIC LOAD CONTROL RELAY FOR THE EMERGENCY EGRESS LIGHTING FIXTURES. WIRE SO THAT THE SENSING CIRCUIT IS CONNECTED TO THE NEAREST NORMAL POWER LIGHTING CIRCUIT VIA THE HOMERUN (AHEAD OF ANY CONTROLS). IF THE NORMAL POWER CIRCUIT IS LOST THE EMERGENCY EGRESS LIGHT FIXTURES WILL AUTOMATICALLY TURN ON OVERRIDING ANY OCCUPANCY SENSOR CONTROLS TO THE EMERGENCY EGRESS LIGHT FIXTURES.
13. NEW STAIR S102, S202:
   A. STAIRWAY LIGHTS: WHEN THE STAIRS ARE OCCUPIED THE EMERGENCY EGRESS LIGHT FIXTURES WILL TURN ON TO 100% LIGHT LEVELS. WHEN THE STAIRS ARE VACANT FOR 15 MINUTES, THE EMERGENCY EGRESS LIGHT FIXTURES WILL DIM TO 10% LIGHT LEVELS. THE LIGHT FIXTURES ARE ON 24/7/365, NO WALL CONTROLS FOR THE LIGHT FIXTURES.
      a. THE LIGHT FIXTURES OVER THE STAIRS ON THE 1ST AND 2ND FLOORS SHALL BE CONNECTED TO A COMBINATION UL1008 BRANCH CIRCUIT EMERGENCY LIGHTING TRANSFER SWITCH (BCELTS) AND A UL924 AUTOMATIC LOAD CONTROL RELAY (ALCR), BODINE GTD20A OR EQUAL. CONNECT HOME RUN (DIRECT FROM THE PANEL) CIRCUIT H2-27 TO THE NORMAL POWER LINE SIDE, CONNECT THE HOME RUN CIRCUIT HS-5 TO THE EMERGENCY POWER LINE SIDE, CONNECT THE HOME RUN CIRCUIT H2-27 TO THE SENSING CIRCUIT. THE LIGHT FIXTURES ARE ON 24/7/365. WIRE SO THAT IF SENSING CIRCUIT (NORMAL POWER) IS LOSS THEN THE DEVICE WILL AUTOMATICALLY TRANSFER TO EMERGENCY POWER CIRCUIT. INSTALL DEVICE ABOVE ACCESSIBLE CEILING SPACE (OVER THE LANDING, NOT OVER THE STEPS).
14. TOP OF ELEVATOR SHAFT ELEV S137:
   A. ELEVATOR LIGHTS: THE LIGHT FIXTURE(S) WILL HAVE TO BE MANUALLY TURNED ON/OFF VIA THE WALL MOUNTED TOGGLE SWITCH.
15. ELEVATOR PIT:
   A. ELEVATOR LIGHTS: THE LIGHT FIXTURE(S) WILL HAVE TO BE MANUALLY TURNED ON/OFF VIA THE WALL MOUNTED TOGGLE SWITCH.
16. EXTERIOR LIGHT FIXTURES:
   A. EMERGENCY EGRESS EXTERIOR LIGHTS: THE EXTERIOR LIGHT FIXTURES SHALL BE CONNECTED THROUGH A H-O-A SWITCH, LIGHTING CONTACTOR, EXTERIOR PHOTOSENSOR, AND LIGHTING LOAD CONTROLLERS. REFER TO LIGHT CONTACTOR DETAIL ON SHEET E102. WHEN THE HOA SWITCH IS SET TO "A", THE EXTERIOR LIGHTS WILL BE AUTOMATICALLY CONTROLLED BY THE PHOTOCELL TURNING EXTERIOR LIGHTS ON AT DUSK AND OFF AT DAWN. WHEN THE HOA SWITCH IS SET TO "H", THE EXTERIOR LIGHTS WILL BE MANUALLY TURNED ON AND STAY ON UNTIL SWITCHED TO EITHER "O" OR "A". WHEN THE HOA SWITCH IS SET TO "O", THE EXTERIOR LIGHTS WILL BE MANUALLY TURNED OFF AND STAY OFF UNTIL SWITCHED TO EITHER "H" OR "A".
      a. PROVIDE A UL924 AUTOMATIC LOAD CONTROL RELAY FOR THE EMERGENCY EGRESS EXTERIOR LIGHTING CIRCUIT. WIRE SO THAT THE SENSING CIRCUIT IS CONNECTED TO THE NEAREST NORMAL POWER LIGHTING CIRCUIT VIA THE HOMERUN (AHEAD OF ANY SWITCHING/DIMMING CONTROLS). IF THE NORMAL POWER CIRCUIT IS LOST THE EMERGENCY EGRESS EXTERIOR LIGHT FIXTURES WILL AUTOMATICALLY TURN ON OVERRIDING THE LIGHTING CONTACTOR CONTROLS TO THE EMERGENCY EGRESS EXTERIOR LIGHT FIXTURES.
17. EXTERIOR FLAG POLE LIGHT FIXTURES:
   A. EXTERIOR LIGHTS: THE TYPE "T1" EXTERIOR FLAG POLE LIGHT FIXTURES SHALL BE CONNECTED THROUGH A H-O-A SWITCH, LIGHTING CONTACTOR, EXTERIOR PHOTOSENSOR, AND LIGHTING LOAD CONTROLLERS. REFER TO LIGHT CONTACTOR DETAIL ON SHEET E102. WHEN THE HOA SWITCH IS SET TO "A", THE EXTERIOR FLAG POLE LIGHTS WILL BE AUTOMATICALLY CONTROLLED BY THE PHOTOCELL TURNING EXTERIOR FLAG POLE LIGHTS ON AT DUSK AND OFF AT DAWN. WHEN THE HOA SWITCH IS SET TO "H", THE EXTERIOR FLAG POLE LIGHTS WILL BE MANUALLY TURNED ON AND STAY ON UNTIL SWITCHED TO EITHER "O" OR "A". WHEN THE HOA SWITCH IS SET TO "O", THE EXTERIOR FLAG POLE LIGHTS WILL BE MANUALLY TURNED OFF AND STAY OFF UNTIL SWITCHED TO EITHER "H" OR "A".
18. CORRIDOR C202:
   A. GENERAL LIGHTS: ALL "c" LIGHT FIXTURES SHALL AUTOMATICALLY TURN ON WHEN ENTERING THE CORRIDOR. THE "c" LIGHT FIXTURES SHALL AUTOMATICALLY TURN OFF WHEN THEN CORRIDOR IS VACANT FOR 15 MINUTES, UNLESS MANUALLY TURNED OFF. SET THE TIME DELAY ON THE OCCUPANCY SENSOR TO 15 MINUTES. THE "c" LIGHT FIXTURE(S) CAN MANUALLY BE TURNED ON/OFF VIA THE $L1 WALL MOUNTED SWITCH(ES).
   B. EMERGENCY EGRESS LIGHTS: ALL "d" EMERGENCY EGRESS LIGHT FIXTURES SHALL AUTOMATICALLY TURN ON WHEN ENTERING THE CORRIDOR. THE "d" EMERGENCY EGRESS LIGHT FIXTURES SHALL AUTOMATICALLY TURN OFF WHEN THEN CORRIDOR IS VACANT FOR 15 MINUTES, UNLESS MANUALLY TURNED OFF. SET THE TIME DELAY ON THE OCCUPANCY SENSOR TO 15 MINUTES. THE "d" EMERGENCY EGRESS LIGHT FIXTURES CAN ONLY BE TURNED ON/OFF VIA THE CEILING MOUNTED OCCUPANCY SENSOR, NO LOW-VOLTAGE WALL CONTROLS FOR THESE EMERGENCY EGRESS LIGHT FIXTURES.
      a. PROVIDE A UL924 AUTOMATIC LOAD CONTROL RELAY FOR THE EMERGENCY EGRESS LIGHTING FIXTURES. WIRE SO THAT THE SENSING CIRCUIT IS CONNECTED TO THE NEAREST NORMAL POWER LIGHTING CIRCUIT VIA THE HOMERUN (AHEAD OF ANY CONTROLS). IF THE NORMAL POWER CIRCUIT IS LOST THE EMERGENCY EGRESS LIGHT FIXTURES WILL AUTOMATICALLY TURN ON OVERRIDING ANY OCCUPANCY SENSOR CONTROLS TO THE EMERGENCY EGRESS LIGHT FIXTURES.

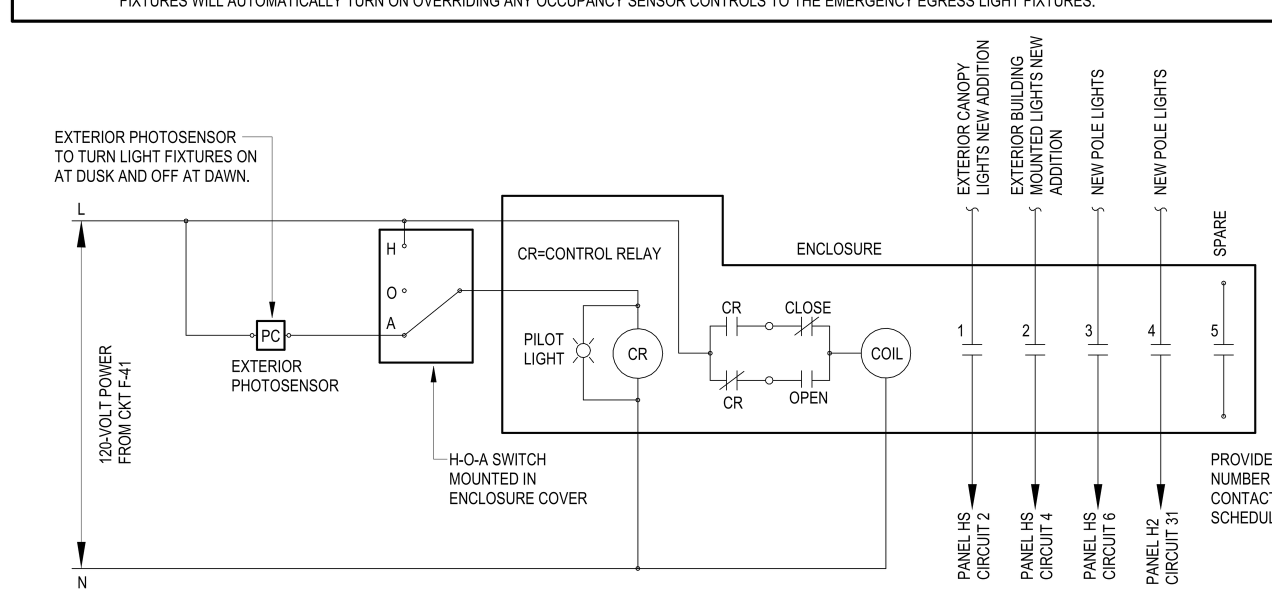

LIGHTING CONTACTOR LC2 WIRING DIAGRAM

SCALE: NONE

LIGHTING SENSOR AND SWITCH SCHEDULE

TYPE	MOUNTING	PERFORMANCE SPECIFICATION
$L1	WALL (46"AFF TO CENTER)	2-BUTTON SWITCH "ON/OFF". MOUNTS IN ANY SINGLE-GANG WALL BOX. CLASS 2 OPERATION WITH VOLTAGES NOT TO EXCEED 35 VOLTS DC. TEMPERATURE RANGE OF 0 DEGREES C TO 40 DEGREES C. MAXIMUM 90% RELATIVE HUMIDITY. REFER TO THE "LIGHTING CONTROLS" ON EACH LIGHTING FLOOR PLAN FOR ADDITIONAL OPERATION/PROGRAMMING REQUIREMENTS.
$L2	WALL (46"AFF TO CENTER)	2-BUTTON 0-10V DIMMER WITH "ON/OFF/RAISE/LOWER". MOUNTS IN ANY SINGLE-GANG WALL BOX. CLASS 2 OPERATION WITH VOLTAGES NOT TO EXCEED 35 VOLTS DC. TEMPERATURE RANGE OF 0 DEGREES C TO 40 DEGREES C. MAXIMUM 90% RELATIVE HUMIDITY. REFER TO THE "LIGHTING CONTROLS" ON EACH LIGHTING FLOOR PLAN FOR ADDITIONAL OPERATION/PROGRAMMING REQUIREMENTS.
$L4	WALL (46"AFF TO CENTER)	5-BUTTON WALL STATION WITH 0-10V RAISE AND LOWER BUTTONS. BUTTON 1 TURNS ON/SELECTS "a" LIGHT FIXTURES, BUTTON 2 TURNS ON/SELECTS"b" LIGHT FIXTURES, BUTTON 3 TURNS ON/SELECTS"c" LIGHT FIXTURES, BUTTON 4 TURNS ON/SELECTS"d" LIGHT FIXTURES, BUTTON 5 TURNS ALL LIGHT FIXTURES OFF. ONCE YOU PRESS A BUTTON THE LED LIGHT NEXT TO THE BUTTON TURNS ON TO INDICATE THE LIGHT ZONE THAT IS OPERATIONAL AND THEN YOU CAN RAISE/LOWER THE LIGHT LEVELS OF THE LIGHT FIXTURES IN THAT ZONE. MOUNTS IN ANY SINGLE-GANG WALL BOX. CLASS 2 OPERATION WITH VOLTAGES NOT TO EXCEED 36 VOLTS DC. TEMPERATURE RANGE OF 0 DEGREES C TO 40 DEGREES C. MAXIMUM 90% RELATIVE HUMIDITY. REFER TO THE "LIGHTING CONTROLS" ON EACH LIGHTING FLOOR PLAN FOR ADDITIONAL OPERATION/PROGRAMMING REQUIREMENTS.
$LSC	WALL (46"AFF TO CENTER)	QSWS2-5B1-**-G: 5-BUTTON WALL STATION FOR 5 PROGRAMMED SCENE CONTROLS. REFER TO THE SEQUENCE OF OPERATIONS ON SHEET E102 ON HOW TO PROGRAM EACH BUTTON. MOUNTS IN ANY SINGLE-GANG WALL BOX. CLASS 2 OPERATION WITH VOLTAGES NOT TO EXCEED 36 VOLTS DC. TEMPERATURE RANGE OF 0 DEGR4EES C TO 40 DEGREES C. MAXIMUM 90% RELATIVE HUMIDITY. REFER TO THE "LIGHTING CONTROLS" ON EACH LIGHTING FLOOR PLAN FOR ADDITION OPERATION/PROGRAMMING REQUIREMENTS.
$V1	WALL (46"AFF TO CENTER)	VACANCY SENSOR SWITCH (MANUAL ON/AUTO OFF). OPERATING VOLTAGE OF 277 VOLTS. VACANCY SENSOR SHALL BE PIR TECHNOLOGY. MOUNTS IN ANY SINGLE-GANG WALL BOX. SENSOR SHALL HAVE A 180 DEGREES FIELD-OF-VIEW WITH UP TO 900 SQUARE FEET MAJOR MOTION COVERAGE AND 400 SQUARE FEET OF MINOR MOTION COVERAGE. LIGHTING LOAD OF 6 AMPS. TEMPERATURE RANGE OF 0 DEGREES C TO 40 DEGREES C. MAXIMUM 90% RELATIVE HUMIDITY. REFER TO THE "LIGHTING CONTROLS" ON EACH LIGHTING FLOOR PLAN FOR AUTO-OFF TIME DELAYS AND ADDITIONAL OPERATION/PROGRAMMING REQUIREMENTS.
O1	CEILING	CEILING MOUNTED OCCUPANCY SENSOR (AUTO ON/AUTO OFF). OCCUPANCY SENSOR SHALL BE DUAL TECHNOLOGY (PIR AND ULTRASONIC). CLASS 2 OPERATION WITH VOLTAGES 20 - 24 VOLTS DC. SENSOR SHALL HAVE A 360 DEGREES FIELD-OF-VIEW WITH UP TO 2000 SQUARE FEET MOTION COVERAGE AT 8 TO 12 FEET MOUNTING HEIGHT. TEMPERATURE RANGE OF 0 DEGREES C TO 40 DEGREES C. MAXIMUM 90% RELATIVE HUMIDITY. REFER TO THE "LIGHTING CONTROLS" ON EACH LIGHTING FLOOR PLAN FOR AUTO-OFF TIME DELAYS AND ADDITIONAL OPERATION/PROGRAMMING REQUIREMENTS. PROVIDE WITH MANUFACTURER REQUIRED POWER PACKS.
V1	CEILING	CEILING MOUNTED VACANCY SENSOR (MANUAL ON/AUTO OFF). VACANCY SENSOR SHALL BE PIR TECHNOLOGY. CLASS 2 OPERATION WITH VOLTAGES 20 - 24 VOLTS DC. SENSOR SHALL HAVE A 360 DEGREES FIELD-OF-VIEW WITH UP TO 2000 SQUARE FEET MOTION COVERAGE AT 8 TO 12 FEET MOUNTING HEIGHT. REFER TO THE "LIGHTING CONTROLS" ON EACH LIGHTING FLOOR PLAN FOR AUTO-OFF TIME DELAYS. TEMPERATURE RANGE OF 0 DEGREES C TO 40 DEGREES C. MAXIMUM 90% RELATIVE HUMIDITY. REFER TO THE "LIGHTING CONTROLS" ON EACH LIGHTING FLOOR PLAN FOR AUTO-OFF TIME DELAYS AND ADDITIONAL OPERATION/PROGRAMMING REQUIREMENTS. PROVIDE WITH MANUFACTURER REQUIRED POWER PACKS.
O3	WALL	WALL CORNER MOUNTED OCCUPANCY SENSOR (AUTO ON/AUTO OFF). OCCUPANCY SENSOR SHALL BE DUAL TECHNOLOGY (PIR AND ULTRASONIC). CLASS 2 OPERATION WITH VOLTAGES 20 - 24 VOLTS DC. SENSOR SHALL HAVE A 90 DEGREES FIELD-OF-VIEW WITH UP TO 2500 SQUARE FEET OF MAJOR MOTION COVERAGE AND 1225 SQUARE FEET OF MINOR MOTION AT 7 TO 9 FEET MOUNTING HEIGHT. TEMPERATURE RANGE OF 0 DEGREES C TO 40 DEGREES C. MAXIMUM 90% RELATIVE HUMIDITY. REFER TO THE "LIGHTING CONTROLS" ON EACH LIGHTING FLOOR PLAN FOR AUTO-OFF TIME DELAYS AND ADDITIONAL OPERATION/PROGRAMMING REQUIREMENTS. PROVIDE WITH MANUFACTURER REQUIRED POWER PACKS.
V3	WALL	WALL CORNER MOUNTED VACANCY SENSOR (MANUAL ON/AUTO OFF). VACANCY SENSOR SHALL BE DUAL TECHNOLOGY (PIR AND ULTRASONIC). CLASS 2 OPERATION WITH VOLTAGES 20 - 24 VOLTS DC. SENSOR SHALL HAVE A 90 DEGREES FIELD-OF-VIEW WITH UP TO 2500 SQUARE FEET OF MAJOR MOTION COVERAGE AND 1225 SQUARE FEET OF MINOR MOTION AT 7 TO 9 FEET MOUNTING HEIGHT. TEMPERATURE RANGE OF 0 DEGREES C TO 40 DEGREES C. MAXIMUM 90% RELATIVE HUMIDITY. REFER TO THE "LIGHTING CONTROLS" ON EACH LIGHTING FLOOR PLAN FOR AUTO-OFF TIME DELAYS AND ADDITIONAL OPERATION/PROGRAMMING REQUIREMENTS. PROVIDE WITH MANUFACTURER REQUIRED POWER PACKS.

LIGHTING FIXTURE SCHEDULE

FIXTURE TYPE	MOUNTING	LED	WATTS	MANUFACTURER & CATALOG NUMBER (BASIS OF DESIGN)	REMARKS
		LED	14 W		
A2	RECESSED CEILING	4300 LUMEN LED	31 W	DAY-BRITE: 2FGXG43L840-4-RS-UNV-DIM	
A3	RECESSED CEILING	4800 LUMEN LED	36 W	DAY-BRITE: 2FGXG48L840-4-RS-UNV-DIM	
A4	RECESSED CEILING	5400 LUMEN LED	41 W	DAY-BRITE: 2FGXG54L840-4-RS-UNV-DIM	
B1	RECESSED CEILING	3000 LUMEN LED	22 W	DAY-BRITE: 2FGXG30L840-2-RS-UNV-DIM	
B2	RECESSED CEILING	3800 LUMEN LED	28 W	DAY-BRITE: 2FGXG38L840-2-RS-UNV-DIM	
B3	RECESSED CEILING	4500 LUMEN LED	34 W	DAY-BRITE: 2FGXG45L840-2-RS-UNV-DIM	
C1	RECESSED CEILING	500 LUMEN LED	6 W	LIGHTOLIER: 4RN-C4L05840MZ10U-C4RDLCC	
C2	RECESSED CEILING	1000 LUMEN LED	11 W	LIGHTOLIER: 4RN-C4L10840MZ10U-C4RDLCC	
E1	PENDANT CEILING	5500 LUMEN LED	41 W	DAY-BRITE: FSS455L840-UNV-DIM	PENDANT MOUNT LIGHT FIXTURE 9'-0" AFF TO BOTTOM OF LIGHT FIXTURE, UNLESS NOTED OTHERWISE.
E1S	PENDANT CEILING	5500 LUMEN LED	41 W	DAY-BRITE: FSS455L840-UNV-DIM-SWZCS	PENDANT MOUNT LIGHT FIXTURE 9'-0" AFF TO BOTTOM OF LIGHT FIXTURE, UNLESS NOTED OTHERWISE. PROVIDE LIGHT FIXTURE WITH INTEGRAL OCCUPANCY SENSOR.
E2	SURFACE CEILING	5500 LUMEN LED	41 W	DAY-BRITE: FSS455L840-UNV-DIM	
F1	SURFACE WALL	4300 LUMEN LED	33 W	DAY-BRITE: V3W243L840-UNV-DIM	COORDINATE WITH ELEVATOR INSTALLER AND ELEVATOR INSPECTOR FOR FINAL WALL MOUNTING HEIGHT FOR LIGHT FIXTURES IN ELEVATOR PIT AND TOP OF ELEVATOR SHAFT.
G1	SURFACE CEILING	1000 LUMEN LED	15 W	LIGHTOLIER: S7R-8-40K-10-Z10U	COLOR FINISH SHALL BE WHITE, UNLESS OTHERWISE NOTED BY ARCHITECT. LIGHT FIXTURE SHALL BE WET RATED AND NON-CONDUCTIVE FOR SHOWER APPLICATION.
H1	SURFACE CEILING	2000 LUMEN LED	17 W	DAY-BRITE: FSS-2-20L-840-UNV-DIM	
H1S	SURFACE CEILING	2000 LUMEN LED	17 W	DAY-BRITE: FSS-2-20L-840-UNV-DIM-SWZCS	PROVIDE LIGHT FIXTURE WITH INTEGRAL OCCUPANCY SENSOR.
K1	SUFACE WALL	8000 LUMEN LED	70 W	STONCO: LPW32-70-NW-G3-4-UNV-*	* = ARCHITECT TO SELECT COLOR FINISH. MOUNT 22'-0" ABOVE THE GROUND LEVELTO THE TOP OF THE FIXTURE.
T1	IN-GRADE MOUNT	14500 LUMEN LED		GARDCO: CSFS-A10-740-RSP-SLF-UNV-FAWS-SP2-*	* = ARCHITECT TO SELECT COLOR FINISH.
X1	CEILING	LED	3 W	PHILIPS CHLORIDE: 44RLU-1-RM	
X2	CEILING	LED	3 W	PHILIPS CHLORIDE: 44RLU-2-R	
X3	SURFACE WALL	LED		PHILIPS CHLORIDE: 44RLU-1-RM	WALL MOUNT AT 8'-0" AFF TO THE BOTTOM OF THE EXIT SIGN, UNLESS NOTED OTHERWISE.

LIGHT FIXTURE SCHEDULE NOTES:

1. BASIC REQUIREMENTS FOR ELECTRICAL SYSTEMS: REFER TO BIDDING INSTRUCTION BELOW FOR BIDDING THE LIGHT FIXTURE SCHEDULE ABOVE.
2. ONLY AFTER THE BIDDING PROCESS IS COMPLETED AND CONTRACT HAS BEEN SIGNED SHALL VALUE ENGINEERING (VE) SUBSTITUTION LIGHT FIXTURES BE CONSIDERED.

BIDDING INSTRUCTIONS:

A. PRODUCTS ARE GENERALLY SPECIFIED BY A PERFORMANCE SPECIFICATION AND/OR BY MANUFACTURER'S NAME AND MODEL NUMBER OR TRADE NAME.

1. *WHEN SPECIFIED ONLY BY A PERFORMANCE SPECIFICATION, THE CONTRACTOR MAY USE ANY MANUFACTURER WHO MEETS THE PERFORMANCE SPECIFICATION AND APPLICABLE CODES.*
2. *WHEN SEVERAL PRODUCTS/MANUFACTURERS ARE SPECIFIED TOGETHER, THEN THE CONTRACTOR HAS THE OPTION OF USING ANY PRODUCT/MANUFACTURER LISTED. THE CONTRACTOR'S BID SHALL BE COMPILED ON THE USE OF THE LISTED PRODUCTS WITHOUT EXCEPTION. SUBSTITUTIONS WILL ONLY BE CONSIDERED AFTER THE CONTRACT HAS BEEN SIGNED AND SHALL BE SUBJECT TO THE REQUIREMENTS OF "SUBSTITUTIONS" NOTED BELOW.*
3. *WHEN SEVERAL PRODUCTS/MANUFACTURERS ARE SPECIFIED TOGETHER AND THE SYSTEM DESIGN IS BASED ON ONE OF THE LISTED PRODUCTS BY SPECIFIC MODEL NUMBER(S) OR CATALOG NUMBER(S), THE CONTRACTOR HAS THE OPTION OF USING THE ONE SPECIFIC PRODUCT OR ANY PRODUCT/MANUFACTURER LISTED. HOWEVER, WHEN ANOTHER LISTED PRODUCT/MANUFACTURER IS USED, THE CONTRACTOR SHALL BE RESPONSIBLE FOR DETERMINING THAT THE PRODUCT(S) ARE COMPATIBLE WITH BUILDING DESIGN, ELECTRICAL DESIGN, AND MECHANICAL DESIGN; ARE EQUAL TO THE BASIS-OF-DESIGN PRODUCT IN QUALITY, APPEARANCE, CONSTRUCTION AND PERFORMANCE (INCLUDING LAMPING AND LENSES FOR LIGHTING FIXTURES); AND WILL NOT NECESSITATE DESIGN MODIFICATIONS BY THE ARCHITECT/ENGINEER. THE CONTRACTOR'S BID SHALL BE COMPILED ON THE USE OF THE LISTED PRODUCTS/MANUFACTURERS WITHOUT EXCEPTION. SUBSTITUTIONS WILL ONLY BE CONSIDERED AFTER THE CONTRACT HAS BEEN SIGNED AND SHALL BE SUBJECT TO THE REQUIREMENTS OF "SUBSTITUTIONS" NOTED BELOW.*
4. ***WHEN ONLY ONE MANUFACTURER'S NAME IS LISTED WITH THE CATALOG NUMBER, THIS SHALL BE THE BASIS OF THE BID. THE CONTRACTOR'S BID SHALL BE COMPILED ON THE USE OF THE LISTED PRODUCT(S) ONLY. SUBSTITUTIONS WILL ONLY BE CONSIDERED AFTER THE CONTRACT HAS BEEN SIGNED AND SHALL BE SUBJECT TO THE REQUIREMENTS OF "SUBSTITUTIONS" NOTED BELOW.***
5. ***A REQUEST FOR SUBSTITUTION SHALL BE MADE IN WRITING FROM THE GENERAL CONTRACTOR ONLY. REQUESTS BY DISTRIBUTORS, MANUFACTURERS, OR MANUFACTURER'S REPRESENTATIVES WILL NOT BE CONSIDERED. ORAL REQUESTS WILL NOT BE CONSIDERED. REQUEST FOR DEVIATIONS FROM PRODUCT SPECIFICATIONS WILL NOT BE CONSIDERED.***
6. ***REQUEST FOR SUBSTITUTIONS WILL NOT BE CONSIDERED DURING BIDDING UNLESS THE SPECIFIED PRODUCT IS DISCONTINUED.***
7. ***IF APPROVAL FOR A SUBSTITUTION IS GRANTED, SAMPLES SHALL BE SUBMITTED IF AND AS REQUESTED BY ENGINEER.***
8. ***APPROVAL OF SUBSTITUTIONS PRIOR TO SHOP DRAWING SUBMITTAL WILL NOT BE GRANTED.***

SUBSTITUTIONS

A. ANY SUBSTITUTION TO THE BASIS OF DESIGN LIGHT FIXTURES SHALL REQUIRE COMPLETE PHOTOMETRIC POINT-BY-POINT CALCULATIONS (AT NO ADDITIONAL COST TO THE CONTRACT) OF ALL AREAS (ROOMS) THE SUBSTITUTE LIGHT FIXTURES WILL BE INSTALLED. THE PHOTOMETRIC CALCULATIONS SHALL INCLUDE SUBSTITUTE LIGHT FIXTURE(S) AND ANY NON-SUBSTITUTE LIGHT FIXTURE(S) WHERE THEY ARE ALL IN THE SAME AREA (ROOM). ARCHITECT/ENGINEER SHALL THEN REVIEW SUBSTITUTION CUT SHEETS AND PHOTOMETRIC CALCULATIONS TO DETERMINE IF THE LIGHT FIXTURES ARE EQUAL TO THE BASIS OF DESIGN.

B. SUBSTITUTIONS ARE UNDERSTOOD TO MEAN THAT THE CONTRACTOR:

1. *HAS PERSONALLY INVESTIGATED THE PROPOSED SUBSTITUTE AND HAS DETERMINED THAT IT IS EQUAL OR SUPERIOR IN ALL RESPECTS, INCLUDING APPEARANCE, TO THE ITEM SPECIFIED.*
2. *WILL PROVIDE THE SAME GUARANTEE FOR THE SUBSTITUTION THAT THEY WOULD FOR THE EQUIPMENT SPECIFIED,*
3. *HAS COORDINATED THE INSTALLATION OF THE SUBSTITUTE, PROVIDING DESIGN MODIFICATIONS AND CHANGES AS REQUIRED FOR THE WORK TO BE COMPLETE IN ALL RESPECTS.*
4. *HAS COORDINATED THE INSTALLATION OF THE SUBSTITUTE WITH THE GENERAL CONTRACTOR PERTAINING TO CHANGES REQUIRED FOR THE WORK TO BE COMPLETE WITH ALL TRADES (ALL CHANGES SHALL BE PROVIDED WITHOUT ADDITIONAL COST TO THE CONTRACT).*
5. *ALL REQUIRED DESIGN MODIFICATIONS AND/OR CHANGES SHALL BE SUBMITTED WITH THE SHOP DRAWINGS FOR THE SUBSTITUTE EQUIPMENT.*
6. *HAS COORDINATED WITH THE LIGHT CONTROLS MANUFACTURER TO ENSURE SUBSTITUTION WILL WORK WITH SPECIFIED LIGHT CONTROLS AND SEQUENCE OF OPERATIONS.*
7. *HAS PROVIDED THE AMOUNT OF CREDIT DUE THE OWNER IF THE SUBSTITUTION IS ACCEPTED.*

C. THE ARCHITECT/ENGINEER WILL INDICATE ON WHICH OF THESE ITEMS THE CONTRACTOR MAY SUBMIT SHOP DRAWINGS FOR REVIEW. THE ACCEPTANCE BY THE ARCHITECT/ENGINEER OF ANY OR ALL OF THOSE ITEMS LISTED BY THE CONTRACTOR FOR REVIEW SHALL NOT CONSTITUTE AN APPROVAL OF THE SUBSTITUTE BUT SHALL MEAN THAT THE CONTRACTOR MAY THEN SUBMIT DETAILED SHOP DRAWINGS FOR REVIEW. WHEN A REQUEST FOR SUBSTITUTION IS GRANTED, THE ARCHITECT/ENGINEER WILL REVIEW SHOP DRAWINGS AS FOLLOWS:

1. *IF SHOP DRAWINGS FOR THE SUBSTITUTE EQUIPMENT ARE MARKED "AMEND & RESUBMIT" ON FIRST SUBMITTAL, THE CONTRACTOR IS ALLOWED TO RESUBMIT FOR TWO ADDITIONAL REVIEWS, UNLESS THE ARCHITECT/ENGINEER PROVIDES OTHER INSTRUCTIONS. IF AFTER THE THIRD REVIEW, THE SUBSTITUTE EQUIPMENT IS NOT ACCEPTED, THE SPECIFIED EQUIPMENT SHALL BE PROVIDED WITHOUT ANY ADDITIONAL COST TO THE CONTRACT.*
2. *IF SHOP DRAWINGS FOR THE SUBSTITUTE EQUIPMENT ARE MARKED "REJECTED – SEE REMARKS" AT ANY SUBMITTAL LEVEL, THE CONTRACTOR SHALL STOP ANY FURTHER SUBMITTALS OF ANY SUBSTITUTE EQUIPMENT. THE ARCHITECT/ENGINEER WILL NOT REVIEW ANY ADDITIONAL SUBSTITUTE EQUIPMENT AND THE CONTRACTOR SHALL SUBMIT AND PROVIDE THE SPECIFIED EQUIPMENT WITHOUT ANY ADDITIONAL COST TO THE CONTRACT.*

SPECTRUM DESIGN
architects | engineers
Plaza Suite 1
10 Church Avenue, SE
Roanoke, VA 24011
540.342.6001
spectrumpc.com

L | P | A
LAWRENCE PERRY & ASSOCIATES
Consulting Engineers
15 E Salem Avenue SE, Suite 101
Roanoke, Virginia 24011
Ph: (540) 342-1816
Fax: (540) 344-3410
Comm. No.: 25114
ⓒ Lawrence Perry and Associates, Inc.

BEDFORD COUNTY SHERIFF'S OFFICE EXPANSION

SPECTRUM DESIGN PROJECT NO.: **24112**

COMMONWEALTH OF VIRGINIA
05/04/2026
WINSTON A. MATTHEWS
Lic. No. 044469
PROFESSIONAL ENGINEER

PROJ. MGR.: **RCH** CHECKED BY: **WAM** DRAWN BY: **MAS**

SHEET ISSUE DATE: **05.04.2026**

PROJECT PHASE: **BID DOCUMENTS**

SHEET REVISIONS:

PLAN NORTH Z SITE NORTH Z

SHEET NAME: **LIGHTING CONTROLS - SEQUENCE OF OPERATIONS**

SHEET NUMBER: **E102**

ORIGINAL SIZE : ARCH E1 (30X42) | 5/4/2026 3:38:56 PM
C:\Users\mas\OneDrive - Lawrence Perry And Associates\Documents\25114 - Bedford Sheriff's Office - ELEC - R26_msmithQTWNS.rvt

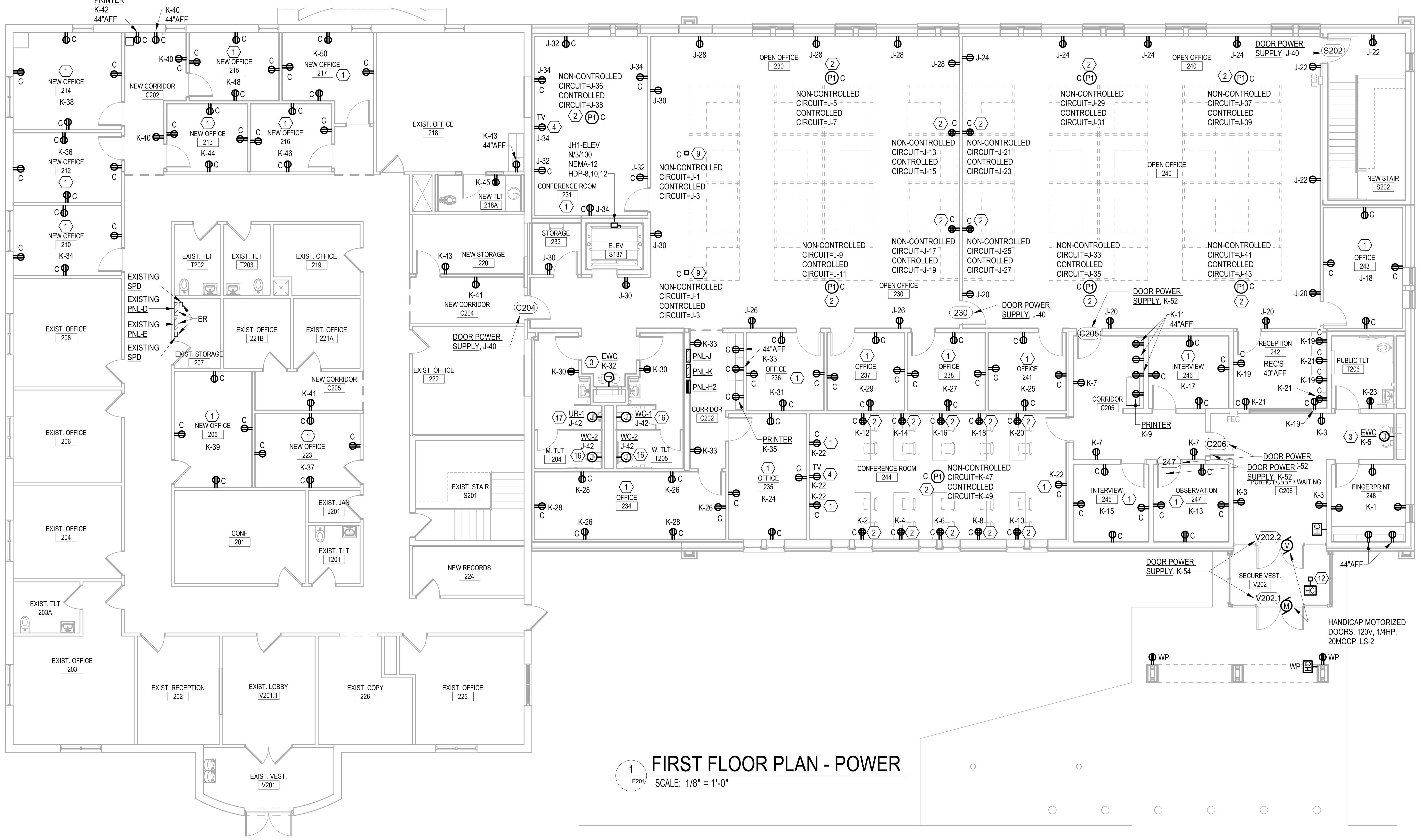

1 FIRST FLOOR PLAN - POWER
E201 SCALE: 1/8" = 1'-0"

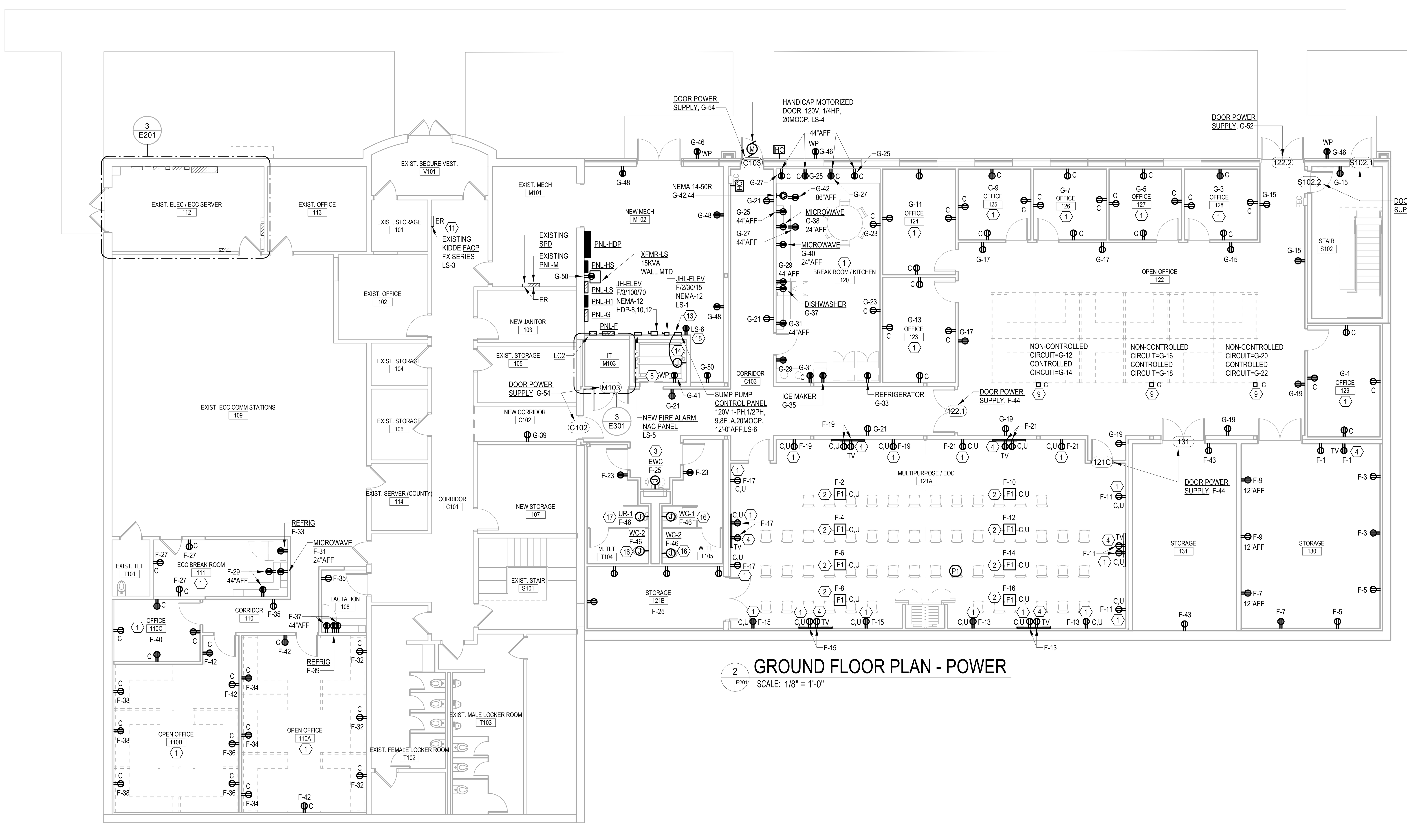

2 GROUND FLOOR PLAN - POWER
E201 SCALE: 1/8" = 1'-0"

PLAN NOTES:

1. THE DUPLEX RECEPTACLE LABELED WITH A "C" IS A SPLIT WIRED CONTROLLED RECEPTACLE WHERE THE TOP HALF OF THE RECEPTACLE IS CONTROLLED AND THE BOTTOM HALF OF THE RECEPTACLE IS UNCONTROLLED. THE TOP HALF CONTROLLED RECEPTACLE SHALL BE POWERED THROUGH A PLUG LOAD CONTROL POWER PACK, CONNECTED TO THE CIRCUIT INDICATED, AND CONTROLLED BY THE LOW-VOLTAGE OCCUPANCY SENSOR IN THE CEILING. UTILIZE THE SAME LOW-VOLTAGE OCCUPANCY SENSOR THAT CONTROLS THE LIGHT FIXTURES IN THE ROOM, REFER TO SHEET E101 FOR LIGHTING CONTROLS.
2. ONE DUPLEX RECEPTACLE IN THE QUAD FLOOR BOX OR WALL MOUNTED RECEPTACLE SHALL BE A "C" CONTROLLED RECEPTACLE THAT SHALL BE POWERED THROUGH A PLUG LOAD CONTROL POWER PACK, CONNECTED TO THE CIRCUIT INDICATED, AND CONTROLLED BY THE LOW-VOLTAGE OCCUPANCY SENSOR IN THE CEILING. UTILIZE THE SAME LOW-VOLTAGE OCCUPANCY SENSOR THAT CONTROLS THE LIGHT FIXTURES IN THE ROOM, REFER TO SHEET E101 FOR LIGHTING CONTROLS. THE OTHER DUPLEX IN THE QUAD FLOOR BOX OR WALL MOUNTED RECEPTACLE SHALL BE HARDWIRED TO THE CIRCUIT INDICATED.
3. COORDINATE WITH ELECTRIC WATER COOLER (EWC) INSTALLER AND THE APPROVED EWC SUBMITTAL FOR THE FINAL ROUGH-IN LOCATION AND REQUIREMENTS. PROVIDE A RECEPTACLE WHERE THE EWC IS PROVIDED WITH A CORD-&-PLUG. PROVIDE A DIRECT CONNECTION WHERE THE EWC IS NOT PROVIDED WITH A CORD-&-PLUG. CIRCUIT BREAKER IN PANEL SHALL BE GROUND FAULT CIRCUIT INTERRUPTER PROTECTED, SO A GROUND FAULT RECEPTACLE AT THE EWC IS NOT REQUIRED.
4. PRIOR TO ROUGHING IN RECESSED WALL BACK-BOX FOR TV, COORDINATE WITH TV INSTALLER FOR THE REQUIRED VERTICAL MOUNTING HEIGHT AND HORIZONTAL LOCATION THE RECEPTACLE WILL NEED TO BE LOCATED BEHIND THE TV TO NOT INTERFERE WITH THE TV WALL MOUNTING BRACKET.
5. SUMP PUMP CONTROL PANEL. EXTEND A 2" EMPTY CONDUIT FROM THE SUMP PUMP CONTROL PANEL TO THE JUNCTION BOX IN THE ELEVATOR PIT FOR THE ALARM AND POWER WIRING. BUSH END OF THE CONDUIT. MOUNT CONTROL PANEL 5'-0" AFF TO TOP OF PANEL.
6. PROVIDE JUNCTION BOX SIZED AS REQUIRED BY THE SUMP PUMP MANUFACTURER AND LOCATED AS DIRECTED BY THE SUMP PUMP INSTALLER.
7. GROUND FAULT RECEPTACLE FOR SUMP PUMP CONTROL PANEL. MOUNT RECEPTACLE CENTERED BELOW THE CONTROL PANEL 6" BELOW BOTTOM OF CONTROL PANEL TO CENTER OF RECEPTACLE AND CONNECT TO THE CIRCUIT INDICATED.
8. FOR ELEVATOR PIT, INSTALL GROUND FAULT RECEPTACLE 4'-6" ABOVE THE ELEVATOR PIT FLOOR AT A LOCATION AS DIRECTED BY THE ELEVATOR EQUIPMENT INSTALLER OR AS REQUIRED BY THE AHJ.
9. REFER TO WIRING DEVICES AND MISCELLANEOUS EQUIPMENT SPECIFICATION SECTION 262726, 2.3, B FOR INFORMATION ON TELECOM/POWER POLES. EACH POWER POLE IS TO BE PROVIDED WITH 2 DUPLEX RECEPTACLES. ONE DUPLEX RECEPTACLE IN THE POWER POLE SHALL BE A "C" CONTROLLED RECEPTACLE THAT SHALL BE POWERED THROUGH A PLUG LOAD CONTROL POWER PACK, CONNECTED TO THE CIRCUIT INDICATED, AND CONTROLLED BY THE LOW-VOLTAGE OCCUPANCY SENSOR IN THE CEILING. UTILIZE THE SAME LOW-VOLTAGE OCCUPANCY SENSOR THAT CONTROLS THE LIGHT FIXTURES IN THE ROOM, REFER TO SHEET E101 FOR LIGHTING CONTROLS. THE OTHER DUPLEX IN THE POWER POLE SHALL BE HARDWIRED TO THE CIRCUIT INDICATED.
10. THE DUPLEX FLOOR BOX RECEPTACLES LABELED WITH A "C" IS A SPLIT WIRED CONTROLLED RECEPTACLE WHERE THE TOP HALF OF THE RECEPTACLE IS CONTROLLED AND THE BOTTOM HALF OF THE RECEPTACLE IS UNCONTROLLED. THE TOP HALF CONTROLLED RECEPTACLE SHALL BE POWERED THROUGH A PLUG LOAD CONTROL POWER PACK, CONNECTED TO THE CIRCUIT INDICATED, AND CONTROLLED BY THE LOW-VOLTAGE OCCUPANCY SENSOR IN THE CEILING. UTILIZE THE SAME LOW-VOLTAGE OCCUPANCY SENSOR THAT CONTROLS THE LIGHT FIXTURES IN THE ROOM, REFER TO SHEET E101 FOR LIGHTING CONTROLS.
11. EXISTING FACP TO BE DISCONNECTED FROM EXISTING CIRCUIT A-9 AND FED FROM NEW CIRCUIT LS-3.
12. PEDESTAL FOR AIPHONE, CARD READER AND HANDICAP DOOR OPERATOR TO BE INSTALLED ON. COORDINATE WITH ARCHITECT FOR SPECIFIED PEDESTAL. AIPHONE SHALL BE HIGHEST DEVICE THEN CARD READER THEN DOOR OPERATOR. COORDINATE WITH ARCHITECT FOR MOUNTING HEIGHTS TO COMPLY WITH ADA.
13. SUMP PUMP CONTROL PANEL. EXTEND A 2" EMPTY CONDUIT FROM THE SUMP PUMP CONTROL PANEL TO THE JUNCTION BOX IN THE ELEVATOR PIT FOR THE ALARM AND POWER WIRING. NUSH EACH END OF THE CONDUIT. MOUNT CONTROL PANEL 1'-0" ABOVE FINISHED FLOOR TO BOTTOM OF CONTROL PANEL.
14. PROVIDE JUNCTION BOX SIZED AS REQUIRED BY THE SUMP PUMP MANUFACTURER AND LOCATED AS DIRECTED BY THE SUMP PUMP INSTALLER.
15. FOR SUMP PUMP CONTROL PANEL. MOUNT RECEPTACLE 4'-0"AFF CENTERED BELOW THE CONTROL PANEL AND CONNECT TO THE CIRCUIT INDICATED.
16. COORDINATE WITH WATER CLOSET SENSOR FLUSH VALVE INSTALLER AND THE APPROVED WATER CLOSET SENSOR FLUSH VALVE SUBMITTAL FOR THE FINAL ROUGH-IN LOCATION AND REQUIREMENTS. PROVIDE A RECEPTACLE WHERE THE WATER CLOSET SENSOR FLUSH VALVE IS PROVIDED WITH A CORD-&-PLUG. PROVIDE A DIRECT CONNECTION WHERE THE WATER CLOSET SENSOR FLUSH VALVE IS NOT PROVIDED WITH A CORD-&-PLUG. CIRCUIT BREAKER IN PANEL SHALL BE GROUND FAULT CIRCUIT INTERRUPTER PROTECTED, SO A GROUND FAULT RECEPTACLE AT THE WATER CLOSET SENSOR FLUSH VALVE IS NOT REQUIRED.
17. COORDINATE WITH URINAL SENSOR FLUSH VALVE INSTALLER AND THE APPROVED URINAL SENSOR FLUSH VALVE SUBMITTAL FOR THE FINAL ROUGH-IN LOCATION AND REQUIREMENTS. PROVIDE A RECEPTACLE WHERE THE URINAL SENSOR FLUSH VALVE IS PROVIDED WITH A CORD-&-PLUG. PROVIDE A DIRECT CONNECTION WHERE THE URINAL SENSOR FLUSH VALVE IS NOT PROVIDED WITH A CORD-&-PLUG. CIRCUIT BREAKER IN PANEL SHALL BE GROUND FAULT CIRCUIT INTERRUPTER PROTECTED, SO A GROUND FAULT RECEPTACLE AT THE URINAL SENSOR FLUSH VALVE IS NOT REQUIRED.

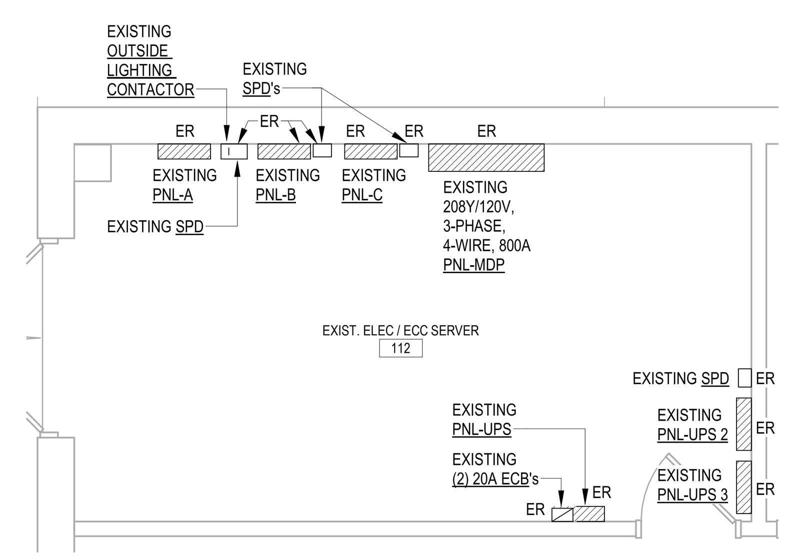

3 ENLARGED EXISTING ELEC/ECC SERVER 112
E201 E201 SCALE: 1/4" = 1'-0"

0 2' 4' 8'
SCALE: 1/4" = 1' - 0"
0 4' 8' 16'
SCALE: 1/8" = 1' - 0"

SPECTRUM DESIGN
architects | engineers
Plaza Suite 1
10 Church Avenue, SE
Roanoke, VA 24011
540.342.6001
spectrumpc.com

L P A
LAWRENCE PERRY & ASSOCIATES
Consulting Engineers
15 E Salem Avenue SE, Suite 101
Roanoke, Virginia 24011
Ph: (540) 342-1816
Fax: (540) 344-3410
Comm. No.: 25114
© Lawrence Perry and Associates, Inc.

BEDFORD COUNTY SHERIFF'S OFFICE EXPANSION

SPECTRUM DESIGN PROJECT NO.: **24112**

COMMONWEALTH OF VIRGINIA
05/04/2026
WINSTON A. MATTHEWS
Lic. No. 044469
PROFESSIONAL ENGINEER

PROJ. MGR.: **RCH** CHECKED BY: **WAM** DRAWN BY: **MAS**

SHEET ISSUE DATE:
05.04.2026

PROJECT PHASE:
BID DOCUMENTS

SHEET REVISIONS:

PLAN NORTH Z Z SITE NORTH

SHEET NAME:
FLOOR PLANS - POWER

SHEET NUMBER:
E201

ORIGINAL SIZE : ARCH E1 (30X42) | 5/4/2026 3:38:56 PM
C:\Users\mas\OneDrive - Lawrence Perry And Associates\Documents\25114 - Bedford Sheriff's Office - ELEC - R26_msmithQTWNS.rvt

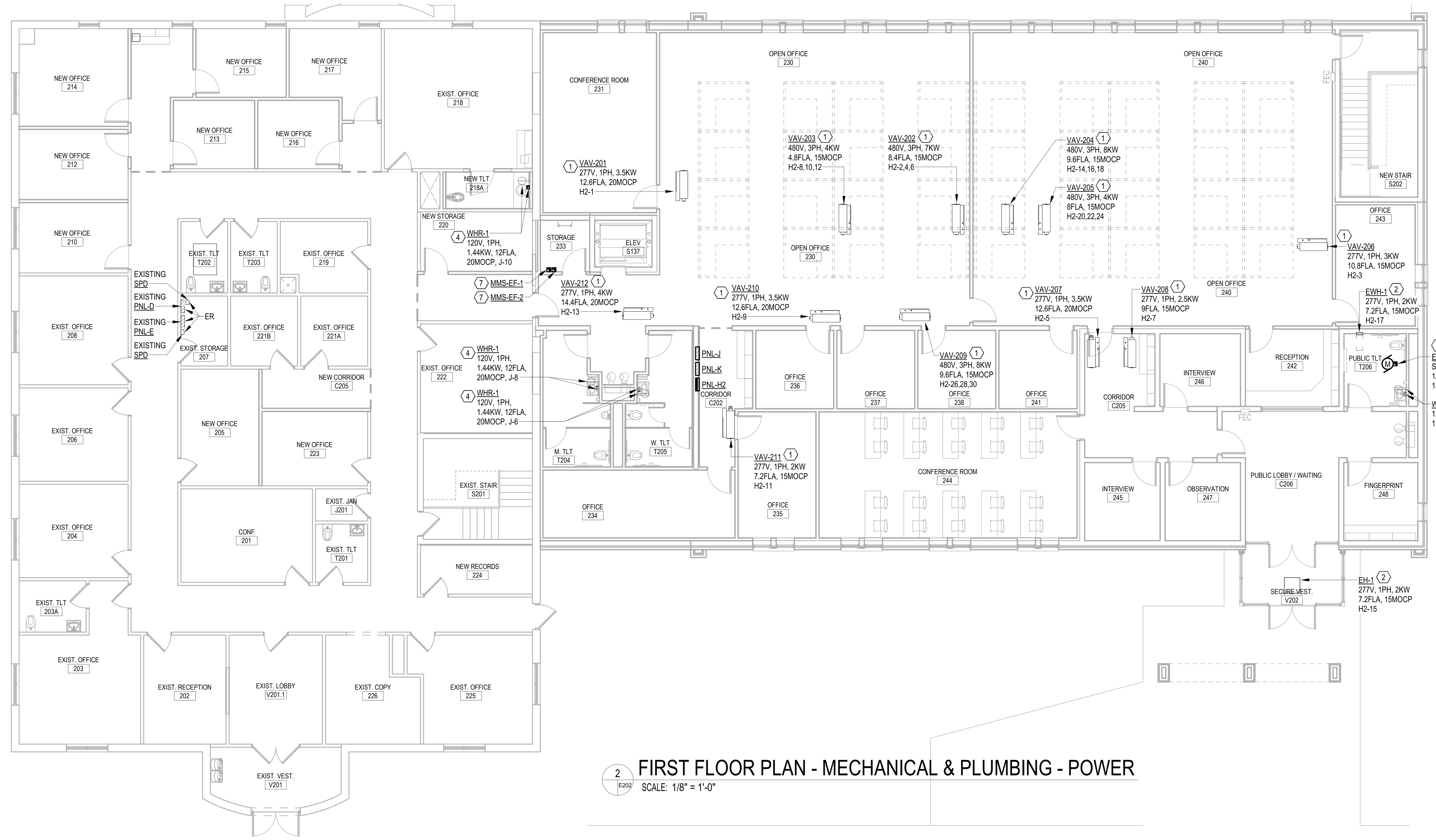

2 E202 FIRST FLOOR PLAN - MECHANICAL & PLUMBING - POWER
SCALE: 1/8" = 1'-0"

PLAN NOTES: (#)

1. VARIABLE AIR VOLUME TERMINAL (VAV) IS PROVIDED WITH AN INTEGRAL PRE-WIRED DISCONNECT SWITCH FROM THE VAV MANUFACTURER.
   A. WHERE FINAL APPROVED VAV IS NOT PROVIDED WITH A PRE-WIRED PACKAGE THEN ELECTRICAL CONTRACTOR SHALL PROVIDE ALL LINE-VOLTAGE WIRING AND CONNECTIONS BETWEEN THE INTEGRAL DISCONNECT SWITCH AND THE VAV PER THE MANUFACTURER'S WIRING DIAGRAMS IN THE APPROVED SHOP DRAWINGS.
   B. WHERE FINAL APPROVED VAV IS NOT PROVIDED WITH AN INTEGRAL DISCONNECT SWITCH THE ELECTRICAL CONTRACTOR SHALL PROVIDE AND INSTALL A DISCONNECT SWITCH SIZED PER APPROVED MANUFACTURER'S REQUIREMENTS. THE ELECTRICAL CONTRACTOR SHALL THEN PROVIDE ALL LINE-VOLTAGE WIRING AND CONNECTIONS BETWEEN THE DISCONNECT SWITCH AND THE VAV PER THE MANUFACTURER'S WIRING DIAGRAMS IN THE APPROVED SHOP DRAWINGS.
2. ELECTRIC HEATERS (EH-1, EWH-1, EUH-1, ECH-1) ARE PROVIDED WITH AN INTEGRAL PRE-WIRED DISCONNECT SWITCHES FROM THE MANUFACTURER OF THE HEATERS.
   A. WHERE FINAL APPROVED HEATERS ARE NOT PROVIDED WITH A PRE-WIRED PACKAGE THEN ELECTRICAL CONTRACTOR SHALL PROVIDE ALL LINE-VOLTAGE WIRING AND CONNECTIONS BETWEEN THE INTEGRAL DISCONNECT SWITCHES AND THE HEATERS PER THE MANUFACTURER'S WIRING DIAGRAMS IN THE APPROVED SHOP DRAWINGS.
   B. WHERE FINAL APPROVED HEATERS ARE NOT PROVIDED WITH INTEGRAL DISCONNECT SWITCHES THE ELECTRICAL CONTRACTOR SHALL PROVIDE AND INSTALL DISCONNECT SWITCHES SIZED PER APPROVED MANUFACTURER'S REQUIREMENTS. THE ELECTRICAL CONTRACTOR SHALL THEN PROVIDE ALL LINE-VOLTAGE WIRING AND CONNECTIONS BETWEEN THE DISCONNECT SWITCHES AND THE HEATERS PER THE MANUFACTURER'S WIRING DIAGRAMS IN THE APPROVED SHOP DRAWINGS.
   C. THE THERMOSTATS FOR THE HEATERS ARE SPECIFIED TO BE LOW-VOLTAGE, WHICH ALL LOW-VOLTAGE WIRING AND CONNECTION SHALL BE BY THE MECHANICAL CONTRACTOR. WHERE FINAL APPROVED HEATERS ARE PROVIDED WITH LINE-VOLTAGE THERMOSTATS THE ELECTRICAL CONTRACTOR SHALL PROVIDE ALL LINE-VOLTAGE WIRING BETWEEN THE THERMOSTATS AND THE HEATERS PER THE MANUFACTURER'S WIRING DIAGRAMS IN THE APPROVED SHOP DRAWINGS.
3. AIR HANDLING UNIT (AHU-1) SHALL BE PROVIDED WITH PRE-WIRED INTEGRAL DISCONNECT SWITCH. BASIS OF DESIGN MANUFACTURER CAN ONLY PROVIDE A SHORT-CIRCUIT RATING OF 5KAIC, SO AN ADDITIONAL FUSED DISCONNECT SWITCH HAS BEEN PROVIDED FOR THIS UNIT TO ACCOMMODATE A HIGHER SHORT-CIRCUIT RATING. BASED ON THE AVAILABLE FAULT CURRENT AT THIS UNIT PROVIDE FUSES IN THE FUSED DISCONNECT SWITCH TO PROTECT THIS UNIT AT 5KAIC.
   A. WHERE FINAL APPROVED AHU-1 IS NOT PROVIDED WITH A PRE-WIRED PACKAGE THEN ELECTRICAL CONTRACTOR SHALL PROVIDE ALL LINE-VOLTAGE WIRING AND CONNECTIONS BETWEEN THE INTEGRAL DISCONNECT SWITCH AND THE AHU-1 PER THE MANUFACTURER'S WIRING DIAGRAMS IN THE APPROVED SHOP DRAWINGS.
   B. WHERE FINAL APPROVED AHU-1 IS NOT PROVIDED WITH INTEGRAL DISCONNECT SWITCH THE ELECTRICAL CONTRACTOR SHALL UTILIZE THE FUSED DISCONNECT SWITCH SPECIFIED. THE ELECTRICAL CONTRACTOR SHALL THEN PROVIDE ALL LINE-VOLTAGE WIRING AND CONNECTIONS BETWEEN THE FUSED DISCONNECT SWITCH AND AHU-1 PER THE MANUFACTURER'S WIRING DIAGRAMS IN THE APPROVED SHOP DRAWINGS.
4. INSTANTANEOUS (MINI-TANK) ELECTRIC WATER HEATER (WHR-1) SHALL BE PROVIDED WITH A CORD-&-PLUG AND PLUGGED INTO A 5-20R SIMPLEX RECEPTACLE UNDER THE SINK. THIS CORD-&-PLUG SHALL ACT AS THE LOCAL DISCONNECT SWITCH FOR WHR-1. THE BREAKER IN THE PANEL SHALL BE A GFCI TYPE CIRCUIT BREAKER.
   A. IF A HARD WIRE CONNECTION IS REQUIRED THEN A NON-FUSED DISCONNECT SWITCH WILL BE REQUIRED TO BE PROVIDED. NOTE THE DISCONNECT SWITCH CAN NOT BE INSTALLED UNDER THE SINK, NOR CAN THE DISCONNECT SWITCH BE INSTALLED ABOVE THE CEILING. THE DISCONNECT SWITCH SHALL BE INSTALLED ON THE WALL IN THE ROOM SO THAT IT MEETS NEC CODE CLEARANCE REQUIREMENTS AND IS WITHIN SIGHT OF WHR-1. DO NOT INSTALL THE DISCONNECT SWITCH IN THE ROOM WITHOUT THE ARCHITECT AND OWNER'S APPROVAL.
5. INSTANTANEOUS (MINI-TANK) ELECTRIC WATER HEATER (WHR-2) SHALL BE PROVIDED WITH A CORD-&-PLUG AND PLUGGED INTO A 5-20R SIMPLEX RECEPTACLE UNDER THE SINK. THIS CORD-&-PLUG SHALL ACT AS THE LOCAL DISCONNECT SWITCH FOR WHR-2. THE BREAKER IN THE PANEL SHALL BE A GFCI TYPE CIRCUIT BREAKER.
   A. IF A HARD WIRE CONNECTION IS REQUIRED THEN A NON-FUSED DISCONNECT SWITCH WILL BE REQUIRED TO BE PROVIDED. NOTE THE DISCONNECT SWITCH CAN NOT BE INSTALLED UNDER THE SINK, NOR CAN THE DISCONNECT SWITCH BE INSTALLED ABOVE THE CEILING. THE DISCONNECT SWITCH SHALL BE INSTALLED ON THE WALL IN THE ROOM SO THAT IT MEETS NEC CODE CLEARANCE REQUIREMENTS AND IS WITHIN SIGHT OF WHR-2. DO NOT INSTALL THE DISCONNECT SWITCH IN THE ROOM WITHOUT THE ARCHITECT AND OWNER'S APPROVAL.
6. THE NEW EXHAUST FAN IS PROVIDED WITH FACTORY MOUNTED AND WIRED DISCONNECT SWITCH. ELECTRICAL CONTRACTOR SHALL PROVIDE ALL LINE-VOLTAGE WIRING/CONNECTIONS AND MECHANICAL CONTRACTOR SHALL PROVIDE ALL LOW-VOLTAGE WIRING/CONNECTIONS. ELECTRICAL CONTRACTOR TO PROVIDE MANUAL MOTOR STARTERS FOR ALL 120 VOLT SINGLE-PHASE FRACTIONAL HORSEPOWER EXHAUST FANS IN NEMA 1 ENCLOSURES, REFER TO SPECIFICATIONS FOR REQUIRED MANUAL MOTOR STARTERS AND INSTALL IN A NEMA 1 ENCLOSURE. LOCATE THE MANUAL MOTOR STARTER IN ATTIC NEXT TO EXHAUST FAN. PROVIDE LABEL ON MANUAL MOTOR STARTER AS TO THE NAME OF THE FAN AND THE ELECTRICAL CIRCUIT FEEDING IT.
   A. WHERE FINAL APPROVED EXHAUST FAN IS NOT PROVIDED WITH PRE-WIRED INTEGRAL DISCONNECT SWITCH THEN THE ELECTRICAL CONTRACTOR SHALL PROVIDE ALL LINE-VOLTAGE WIRING AND CONNECTIONS BETWEEN THE INTEGRAL DISCONNECT SWITCH AND THE EXHAUST FAN PER THE MANUFACTURER'S WIRING DIAGRAMS IN THE APPROVED SHOP DRAWINGS.
   B. WHERE FINAL APPROVED EXHAUST FAN IS NOT PROVIDED WITH INTEGRAL DISCONNECT SWITCH THEN THE ELECTRICAL CONTRACTOR SHALL PROVIDE AND INSTALL AN INTEGRAL DISCONNECT SWITCH SIZED PER APPROVED MANUFACTURER'S REQUIREMENTS. THE ELECTRICAL CONTRACTOR SHALL THEN PROVIDE ALL LINE-VOLTAGE WIRING AND CONNECTIONS BETWEEN THE INTEGRAL DISCONNECT SWITCH AND THE EXHAUST FAN PER THE MANUFACTURER'S WIRING DIAGRAMS IN THE APPROVED SHOP DRAWINGS.
7. THE NEW EXHAUST FAN IS PROVIDED WITH FACTORY MOUNTED AND WIRED DISCONNECT SWITCH. ELECTRICAL CONTRACTOR SHALL PROVIDE ALL LINE-VOLTAGE WIRING/CONNECTIONS AND MECHANICAL CONTRACTOR SHALL PROVIDE ALL LOW-VOLTAGE WIRING/CONNECTIONS. ELECTRICAL CONTRACTOR TO PROVIDE MANUAL MOTOR STARTERS FOR ALL 120 VOLT SINGLE-PHASE FRACTIONAL HORSEPOWER EXHAUST FANS IN NEMA 1 ENCLOSURES, REFER TO SPECIFICATIONS FOR REQUIRED MANUAL MOTOR STARTERS AND INSTALL IN A NEMA 1 ENCLOSURE. LOCATE THE MANUAL MOTOR STARTER IN STORAGE ROOM 233. PROVIDE LABEL ON MANUAL MOTOR STARTER AS TO THE NAME OF THE FAN AND THE ELECTRICAL CIRCUIT FEEDING IT.
   A. WHERE FINAL APPROVED EXHAUST FAN IS NOT PROVIDED WITH PRE-WIRED INTEGRAL DISCONNECT SWITCH THEN THE ELECTRICAL CONTRACTOR SHALL PROVIDE ALL LINE-VOLTAGE WIRING AND CONNECTIONS BETWEEN THE INTEGRAL DISCONNECT SWITCH AND THE EXHAUST FAN PER THE MANUFACTURER'S WIRING DIAGRAMS IN THE APPROVED SHOP DRAWINGS.
   B. WHERE FINAL APPROVED EXHAUST FAN IS NOT PROVIDED WITH INTEGRAL DISCONNECT SWITCH THEN THE ELECTRICAL CONTRACTOR SHALL PROVIDE AND INSTALL AN INTEGRAL DISCONNECT SWITCH SIZED PER APPROVED MANUFACTURER'S REQUIREMENTS. THE ELECTRICAL CONTRACTOR SHALL THEN PROVIDE ALL LINE-VOLTAGE WIRING AND CONNECTIONS BETWEEN THE INTEGRAL DISCONNECT SWITCH AND THE EXHAUST FAN PER THE MANUFACTURER'S WIRING DIAGRAMS IN THE APPROVED SHOP DRAWINGS.
   C. COORDINATE WITH ROOF INSTALLER FOR ALL PENETRATIONS THROUGH THE ROOF AND FOR ANY STRUCTURAL SUPPORTS ATTACHED TO THE ROOF.
8. PROVIDE GFCI SERVICE RECEPTACLE WITH WHILE-IN-USE WATER-PROOF COVERPLATE WITHIN 25 FEET OF ROOF TO EQUIPMENT. MOUNT RECEPTACLE 1'-6" ABOVE TOP OF FINISHED ROOF TO CENTER OF RECEPTACLE.
9. ROOF TOP UNIT (RTU-1) SHALL BE PROVIDED WITH PRE-WIRED INTEGRAL FUSED DISCONNECT OR CIRCUIT BREAKER FOR SHORT-CIRCUIT RATING OF 65KAIC.
   A. WHERE FINAL APPROVED RTU-1 IS NOT PROVIDED WITH A PRE-WIRED PACKAGE THEN ELECTRICAL CONTRACTOR SHALL PROVIDE ALL LINE-VOLTAGE WIRING AND CONNECTIONS BETWEEN THE INTEGRAL FUSED DISCONNECT SWITCH OR CIRCUIT BREAKER AND THE RTU-1 PER THE MANUFACTURER'S WIRING DIAGRAMS IN THE APPROVED SHOP DRAWINGS.
   B. WHERE FINAL APPROVED RTU-1 IS NOT PROVIDED WITH INTEGRAL FUSED DISCONNECT SWITCH OR CIRCUIT BREAKER THE ELECTRICAL CONTRACTOR SHALL PROVIDE AND INSTALL EITHER A FUSED DISCONNECT SWITCH OR AN ENCLOSED CIRCUIT BREAKER SIZED PER APPROVED MANUFACTURER'S REQUIREMENTS. THE ELECTRICAL CONTRACTOR SHALL THEN PROVIDE ALL LINE-VOLTAGE WIRING AND CONNECTIONS BETWEEN THE INTEGRAL FUSED DISCONNECT SWITCH OR CIRCUIT BREAKER AND THE RTU-1 PER THE MANUFACTURER'S WIRING DIAGRAMS IN THE APPROVED SHOP DRAWINGS.
10. CONDENSING UNIT (CU-1) SHALL BE PROVIDED WITH PRE-WIRED INTEGRAL DISCONNECT SWITCH. BASIS OF DESIGN MANUFACTURER CAN ONLY PROVIDE A SHORT-CIRCUIT RATING OF 5KAIC, SO AN ADDITIONAL FUSED DISCONNECT SWITCH HAS BEEN PROVIDED FOR THIS UNIT TO ACCOMMODATE A HIGHER SHORT-CIRCUIT RATING. BASED ON THE AVAILABLE FAULT CURRENT AT THIS UNIT PROVIDE FUSES IN THE FUSED DISCONNECT SWITCH TO PROTECT THIS UNIT AT 5KAIC.
   A. WHERE FINAL APPROVED CU-1 IS NOT PROVIDED WITH A PRE-WIRED PACKAGE THEN ELECTRICAL CONTRACTOR SHALL PROVIDE ALL LINE-VOLTAGE WIRING AND CONNECTIONS BETWEEN THE INTEGRAL DISCONNECT SWITCH AND THE CU-1 PER THE MANUFACTURER'S WIRING DIAGRAMS IN THE APPROVED SHOP DRAWINGS.
   B. WHERE FINAL APPROVED CU-1 IS NOT PROVIDED WITH INTEGRAL DISCONNECT SWITCH THE ELECTRICAL CONTRACTOR SHALL UTILIZE THE FUSED DISCONNECT SWITCH SPECIFIED. THE ELECTRICAL CONTRACTOR SHALL THEN PROVIDE ALL LINE-VOLTAGE WIRING AND CONNECTIONS BETWEEN THE FUSED DISCONNECT SWITCH AND CU-1 PER THE MANUFACTURER'S WIRING DIAGRAMS IN THE APPROVED SHOP DRAWINGS.
   C. COORDINATE WITH ROOF INSTALLER FOR ALL PENETRATIONS THROUGH THE ROOF AND FOR ANY STRUCTURAL SUPPORTS ATTACHED TO THE ROOF.
11. PROVIDE FUSED DISCONNECT SWITCH FOR DUCTLESS SPLIT SYSTEM OUTDOOR UNIT. LOCATE THE DISCONNECT SWITCH NEXT TO THE OUTDOOR UNIT. COORDINATE WITH MECHANICAL CONTRACTOR AND OUTDOOR UNIT MANUFACTURER TO SEE IF DISCONNECT SWITCH CAN BE MOUNTED ON SIDE OF THE OUTDOOR UNIT WITHOUT IMPEDING ON ANY OPERATION OR MAINTENANCE CLEARANCE REQUIREMENTS. IF NOT, PROVIDE STRUCTURE FOR DISCONNECT SWITCH TO BE MOUNTED NEXT TO THE OUTDOOR UNIT. COORDINATE WITH ROOFING CONTRACTOR FOR ANY STRUCTURAL SUPPORT SYSTEMS THAT ARE TO BE SECURED TO THE ROOF. THE OUTDOOR UNIT HP-1 SHALL FEE THE INDOOR UNIT DSS-1 IN IT M103. PROVIDE ALL REQUIRED LINE-VOLTAGE WIRING IN CONDUIT BETWEEN OUTDOOR AND INDOOR UNITS.
12. RELOCATED DISCONNECT SWITCH SHALL BE INSTALLED IN A SWITCH BANK. EACH DISCONNECT SWITCH IS TO BE MOUNTED 5'-0"AFG FROM THE TOP OF THE DISCONNECT SWITCH.
13. CIRCUIT FEEDING EQUIPMENT IS UNKNOWN. ELECTRICAL CONTRACTOR IS TO TRACE THE EXISTING CIRCUIT FOR REMOVAL AND REINSTALL.

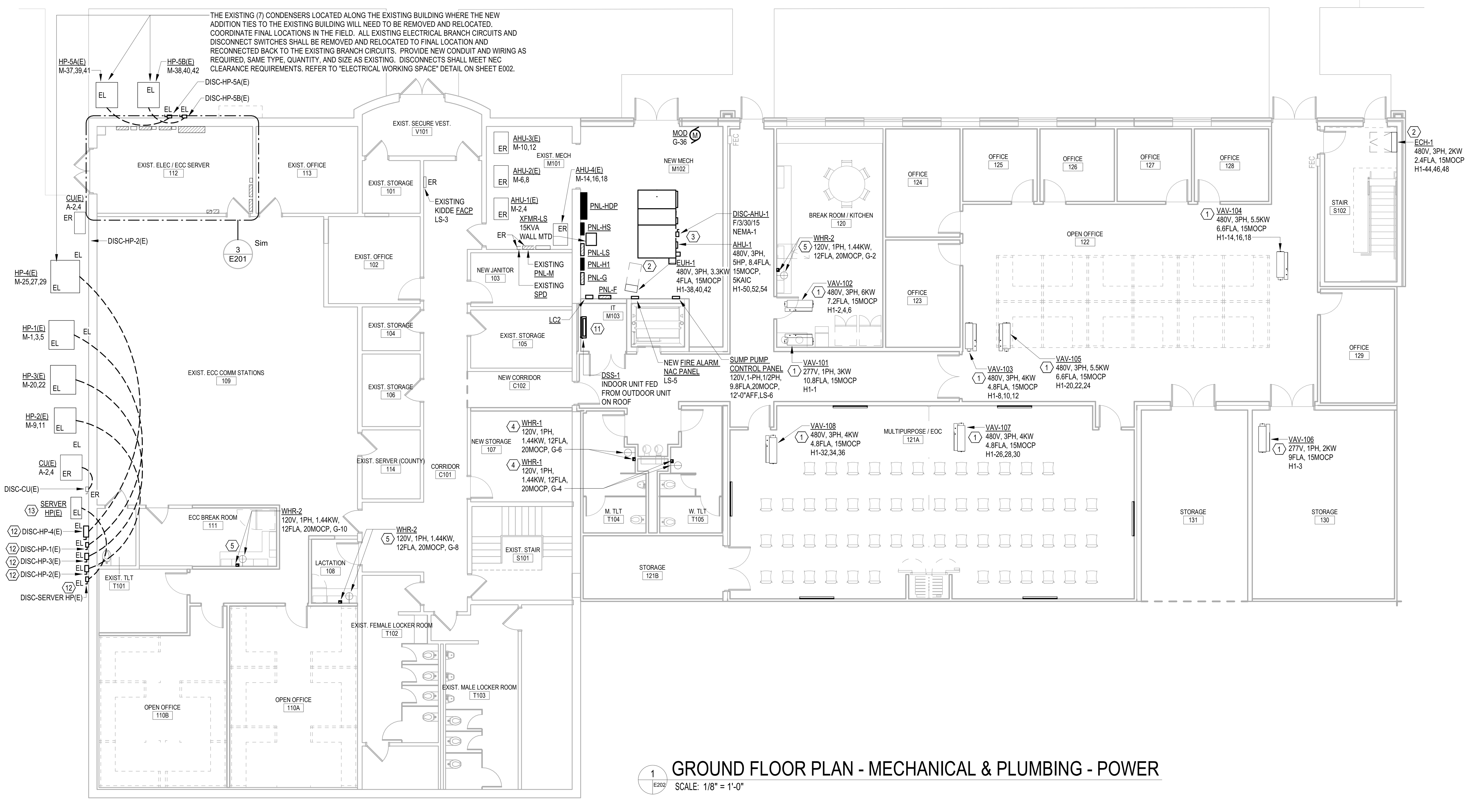

1 E202 GROUND FLOOR PLAN - MECHANICAL & PLUMBING - POWER
SCALE: 1/8" = 1'-0"

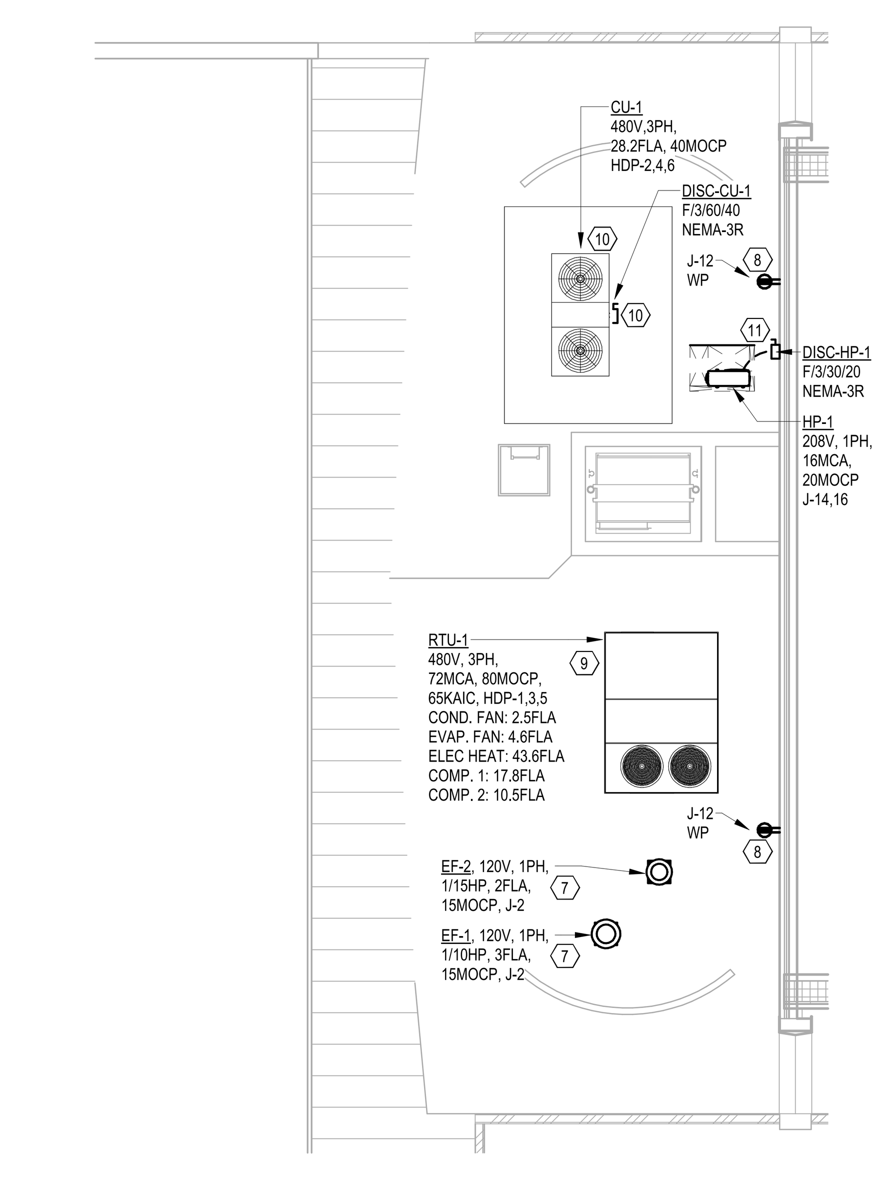

3 E202 ROOF PLAN - MECHANICAL & PLUMBING - POWER
SCALE: 1/8" = 1'-0"

0 4' 8' 16'
SCALE: 1/8" = 1' - 0"

PLAN NORTH   SITE NORTH

SPECTRUM DESIGN
architects | engineers
Plaza Suite 1
10 Church Avenue, SE
Roanoke, VA 24011
540.342.6001
spectrumpc.com

L | P | A
LAWRENCE PERRY & ASSOCIATES
Consulting Engineers
15 E Salem Avenue SE, Suite 101
Roanoke, Virginia 24011
Ph: (540) 342-1816
Fax: (540) 344-3410
Comm. No.: 25114
© Lawrence Perry and Associates, Inc.

BEDFORD COUNTY SHERIFF'S OFFICE EXPANSION

SPECTRUM DESIGN PROJECT NO.: **24112**

COMMONWEALTH OF VIRGINIA
05/04/2026
WINSTON A. MATTHEWS
Lic. No. 044469
PROFESSIONAL ENGINEER

PROJ. MGR.:	CHECKED BY:	DRAWN BY:
RCH	**WAM**	**MAS**

SHEET ISSUE DATE:
05.04.2026

PROJECT PHASE:
BID DOCUMENTS

SHEET REVISIONS:

SHEET NAME:
FLOOR PLANS - MECHANICAL & PLUMBING - POWER

SHEET NUMBER:
E202

ORIGINAL SIZE : ARCH E1 (30X42) | 5/4/2026 3:38:57 PM
C:\Users\mas\OneDrive - Lawrence Perry And Associates\Documents\25114 - Bedford Sheriff's Office - ELEC - R26_msmithQTWNS.rvt

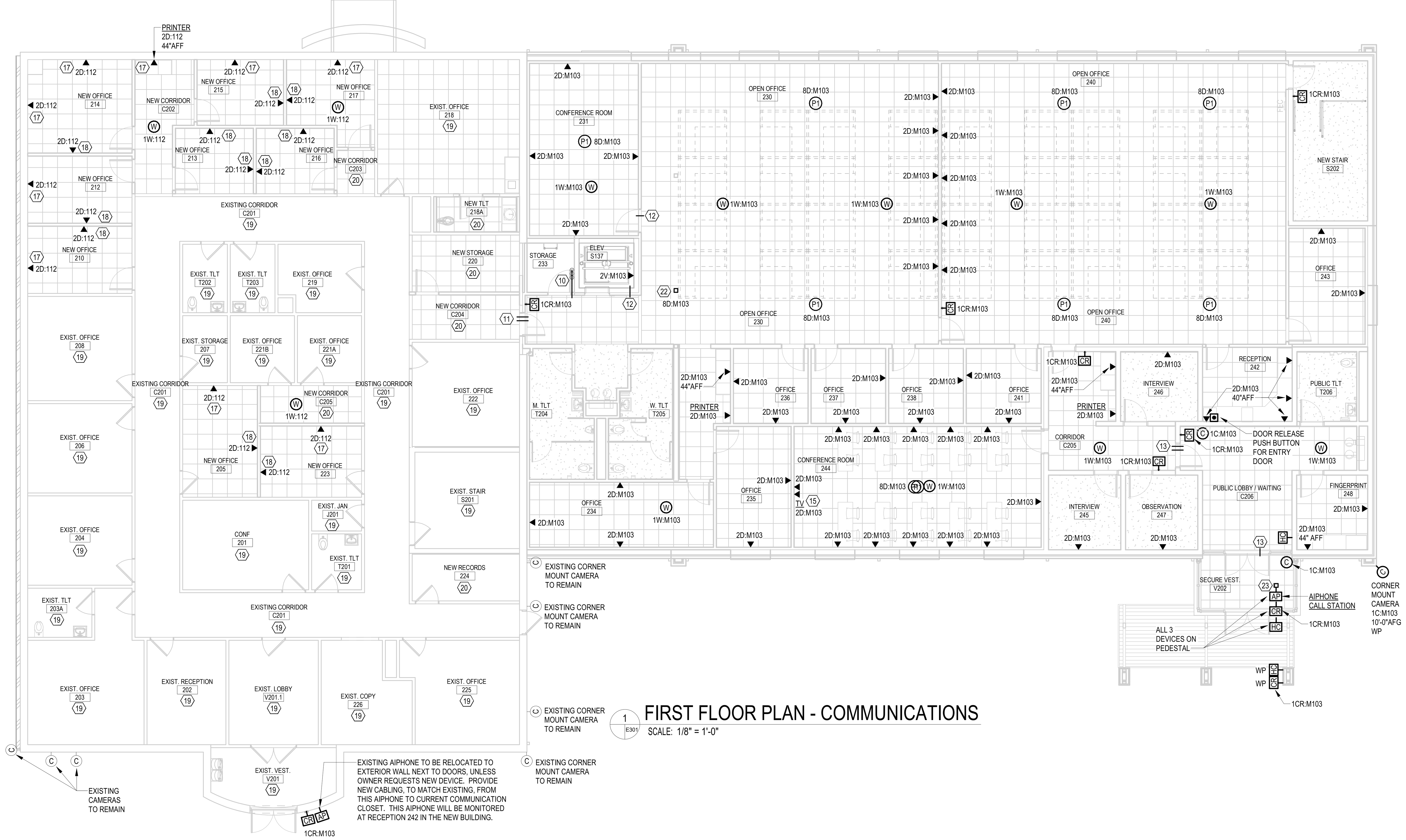

FIRST FLOOR PLAN - COMMUNICATIONS

SCALE: 1/8" = 1'-0"

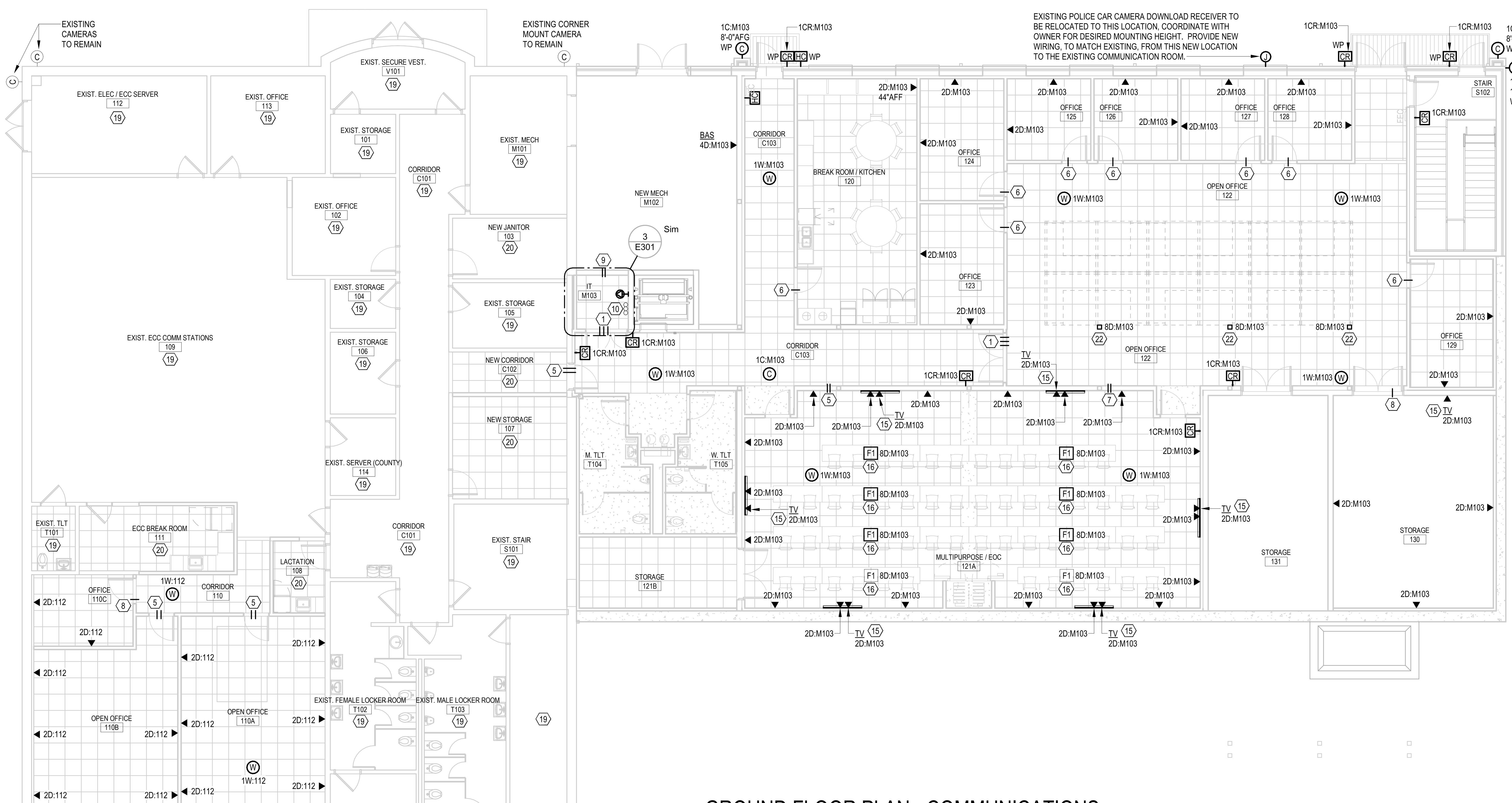

GROUND FLOOR PLAN - COMMUNICATIONS

SCALE: 1/8" = 1'-0"

PLAN NOTES: (#)

1. PROVIDE (3) 4" WALL SLEEVES MOUNTED 10'-0"AFF. TO BE PROVIDED AND INSTALLED BY DIVISION 26 ELECTRICAL CONTRACTOR. WHERE WALL IS FIRE RATED PROVIDE FIRE RATED SLEEVES EQUAL TO THE RATING OF THE WALL.
2. PANDUIT RACK: TO BE PROVIDED AND INSTALLED BY DIVISION 27 LOW-VOLTAGE CONTRACTOR. SUPPORT THE RACKS TO THE FLOOR PER MANUFACTURER'S INSTALLATION INSTRUCTIONS.
3. PANDUIT VERTICAL CABLE MANAGEMENT: TO BE PROVIDED AND INSTALLED BY DIVISION 27 LOW-VOLTAGE CONTRACTOR. SUPPORT THE CABLE MANAGEMENT TO THE PANDUIT RACK(S) PER MANUFACTURER'S INSTALLATION INSTRUCTIONS.
4. HORIZONTAL LADDER TRAY: 18" WIDE HORIZONTAL LADDER TYPE CABLE TRAY TO BE INSTALLED 7'-6" AFF TO BOTTOM OF CABLE TRAY. TO BE PROVIDED AND INSTALLED BY DIVISION 26 ELECTRICAL CONTRACTOR. SUPPORT THE CABLE TRAY FROM THE WALLS PER MANUFACTURER'S INSTALLATION INSTRUCTIONS.
5. PROVIDE (2) 4" WALL SLEEVES MOUNTED 10'-6"AFF. TO BE PROVIDED AND INSTALLED BY DIVISION 26 ELECTRICAL CONTRACTOR. WHERE WALL IS FIRE RATED PROVIDE FIRE RATED SLEEVES EQUAL TO THE RATING OF THE WALL.
6. PROVIDE A 2" WALL SLEEVE MOUNTED 10'-0"AFF. TO BE PROVIDED AND INSTALLED BY DIVISION 26 ELECTRICAL CONTRACTOR. WHERE WALL IS FIRE RATED PROVIDE FIRE RATED SLEEVE EQUAL TO THE RATING OF THE WALL.
7. PROVIDE (2) 2" WALL SLEEVES MOUNTED 10'-6"AFF. TO BE PROVIDED AND INSTALLED BY DIVISION 26 ELECTRICAL CONTRACTOR. WHERE WALL IS FIRE RATED PROVIDE FIRE RATED SLEEVES EQUAL TO THE RATING OF THE WALL.
8. PROVIDE A 2" WALL SLEEVE MOUNTED 10'-6"AFF. TO BE PROVIDED AND INSTALLED BY DIVISION 26 ELECTRICAL CONTRACTOR. WHERE WALL IS FIRE RATED PROVIDE FIRE RATED SLEEVE EQUAL TO THE RATING OF THE WALL.
9. PROVIDE (2) 2" WALL SLEEVES MOUNTED 9'-0"AFF. TO BE PROVIDED AND INSTALLED BY DIVISION 26 ELECTRICAL CONTRACTOR. WHERE WALL IS FIRE RATED PROVIDE FIRE RATED SLEEVES EQUAL TO THE RATING OF THE WALL.
10. PROVIDE (3) 4" CONDUIT PATHWAYS FROM CEILING IN I.T. M103 TO CEILING OF 2ND FLOOR CORRIDOR. START CONDUITS 2'-0" BELOW BOTTOM OF FINISHED FIRST FLOOR SLAB, EXTEND UP THROUGH THE SLAB UP THE WALL IN STORAGE 233 AND THEN TURN OUT ABOVE THE OPEN OFFICE 230 CORRIDOR. TO BE PROVIDED AND INSTALLED BY DIVISION 26 ELECTRICAL CONTRACTOR. WHERE WALL AND/OR FLOOR IS FIRE RATED PROVIDE FIRE RATED SLEEVES EQUAL TO THE RATING OF THE WALL AND/OR FLOOR.
11. PROVIDE (2) 4" WALL SLEEVES MOUNTED 9'-6"AFF. TO BE PROVIDED AND INSTALLED BY DIVISION 26 ELECTRICAL CONTRACTOR. WHERE WALL IS FIRE RATED PROVIDE FIRE RATED SLEEVES EQUAL TO THE RATING OF THE WALL.
12. PROVIDE A 2" WALL SLEEVE MOUNTED 9'-6"AFF. TO BE PROVIDED AND INSTALLED BY DIVISION 26 ELECTRICAL CONTRACTOR. WHERE WALL IS FIRE RATED PROVIDE FIRE RATED SLEEVE EQUAL TO THE RATING OF THE WALL.
13. PROVIDE (2) 4" WALL SLEEVES MOUNTED 11'-0"AFF. TO BE PROVIDED AND INSTALLED BY DIVISION 26 ELECTRICAL CONTRACTOR. WHERE WALL IS FIRE RATED PROVIDE FIRE RATED SLEEVES EQUAL TO THE RATING OF THE WALL.
14. PROVIDE A 2" WALL SLEEVE MOUNTED 10'-8"AFF. TO BE PROVIDED AND INSTALLED BY DIVISION 26 ELECTRICAL CONTRACTOR. WHERE WALL IS FIRE RATED PROVIDE FIRE RATED SLEEVE EQUAL TO THE RATING OF THE WALL.
15. PRIOR TO ROUGHING IN RECESSED COMMUNICATION WALL BACK-BOX FOR TV, COORDINATE WITH TV INSTALLER FOR THE REQUIRED VERTICAL MOUNTING HEIGHT AND HORIZONTAL LOCATION THE DATA DROP WILL NEED TO BE LOCATED BEHIND THE TV TO NOT INTERFERE WITH THE TV WALL MOUNTING BRACKET.
16. COORDINATE WITH ARCHITECT AND OWNER FOR FINAL DIMENSIONED LOCATION OF WHERE FLOOR BOX WILL BE LOCATED. PROVIDED (2) 1-1/2" COMMUNICATION CONDUITS FROM THE FLOOR BOX TO NEAREST INTERIOR WALL WHERE CONDUITS WILL TURN UP INTO INTERIOR WALL, EXTEND UP THE WALL AND TURN OUT 12" ABOVE THE TOP OF THE ACCESSIBLE CEILING WITH BUSHING ON END OF CONDUITS. CONDUITS SHALL BE PROVIDED WITH NYLON PULL STRING TO PULL ADDITIONAL FUTURE LOW-VOLTAGE CABLING.
17. DUE TO EXISTING FURNITURE BLOCKING THE EXISTING WALLS IN THIS ROOM, UNABLE TO DETERMINE IF THERE ARE EXISTING COMMUNICATION DATA DROPS THAT IN EXISTING WALLS THAT CAN REMAIN AND BE REUSED FOR THE NEW ROOM LAYOUT. NEW DATA DROPS HAVE BEEN SHOWN FOR THIS RENOVATED ROOM. HOWEVER, IF DURING CONSTRUCTION EXISTING DATA DROPS ARE FOUND ON THE EXISTING WALL NEAR WHERE THE NEW DATA DROPS ARE SHOWN, THEN RETAIN THE EXISTING DATA DROPS AND PROVIDE CREDIT TO OWNER FOR THE NEW DATA DROPS, UNLESS OWNER DECIDES THEY STILL WANT THE NEW DATA DROPS. ALL NEW DATA DROPS ARE TO BE PROVIDED WITH RECESSED WALL BOXES WITH CONDUITS FROM THE NEW BOX TO EXTEND DOWN THROUGH THE FLOOR SLAB AND STUB INTO THE CEILING ON FLOOR BELOW, WHERE END OF CONDUITS SHALL BE PROVIDED WITH BUSHINGS.
18. ALL NEW DATA DROPS IN NEW WALLS SHALL BE PROVIDED WITH RECESSED WALL BOXES WITH CONDUITS FROM THE NEW BOX TO EXTEND DOWN THROUGH THE FLOOR SLAB AND STUB INTO THE CEILING ON FLOOR BELOW, WHERE END OF CONDUITS SHALL BE PROVIDED WITH BUSHINGS.
19. ALL EXISTING LOW-VOLTAGE COMMUNICATION DEVICES IN THIS ROOM/SPACE SHALL REMAIN AS INSTALLED.
20. NO NEW LOW-VOLTAGE COMMUNICATION DEVICES IN THIS NEW ROOM/SPACE.
21. NEW ACCESS CONTROL PANEL BY DIVISION 28 LOW-VOLTAGE CONTRACTOR. TO BE MOUNTED AT 5'-6" AFF TO TOP OF CONTROL PANELS.
22. REFER TO WIRING DEVICES AND MISCELLANEOUS EQUIPMENT SPECIFICATION SECTION 262726, 2.3, B FOR INFORMATION ON TELECOM/POWER POLES. PROVIDE 2 SINGLE-GANG KNOCKOUTS FOR COMMUNICATION DEVICES.
23. PEDESTAL FOR AIPHONE, CARD READER AND HANDICAP DOOR OPERATOR TO BE INSTALLED ON. COORDINATE WITH ARCHITECT FOR SPECIFIED PEDESTAL. AIPHONE SHALL BE HIGHEST DEVICE THEN CARD READER THEN DOOR OPERATOR. COORDINATE WITH ARCHITECT FOR MOUNTING HEIGHTS TO COMPLY WITH ADA.

COMMUNICATION SYSTEMS:

OFOI = OWNER FURNISHED OWNER INSTALLED
OFCI = OWNER FURNISHED CONTRACTOR INSTALLED
CFCI = CONTRACTOR FURNISHED CONTRACTOR INSTALLED
CFOI = CONTRACTOR FURNISHED OWNER INSTALLED

CAMERA SYSTEM:
- A. CAMERAS: OFCI
  - a. CAMERA SYSTEM BY VERKADA.
  - b. CAMERAS INSIDE: CM42 MINI DOME CAMERA (WAITING VESTIBULE, ETC.)
  - c. CAMERAS OUTSIDE: CY53-E MULTISENSOR CAMERA (CORNER OF BUILDING)
  - d. CAMERAS OUTSIDE: CD63-E DOME CAMERA (BACK OF BUILDING)
  - e. NO HEAD-END/NVR REQURIED. EACH CAMERA USES LOCAL STORAGE + CLOUD UPLOAD OVER A SINGLE CABLE CONNECTION.
  - f. OWNER WILL HANDLE VERKADA CLOUD LICENSING, CONFIGURATION, USER ACCESS, AND ANALYTICS.
- B. CABLES BETWEEN CAMERAS AND RACK IN COMMUNICATION ROOM WITH PANDUIT MINICOM CONNECTORS ON BOTH ENDS: CFCI
  - a. CONTRACTOR TO VERIFY WITH OWNER COLOR OF CABLE DESIRED BY OWNER FOR CAMERA SYSTEM.
  - b. CONTRACTOR TO PROVIDE CABLE LABELS ON BOTH ENDS OF THE CABLE, COORDINATE WITH OWNER'S IT DEPARTMENT FOR DESIRED LABELING VERBIAGE.
- C. CONDUIT RACEWAY SYSTEM AND JUNCTION BOXES BETWEEN CAMERAS AND RACK IN COMMUNICATION ROOM: CFCI
- D. WHERE ANY CAMERAS INSTALLED ARE OTHER THAN LOW-VOLTAGE (POE), THE CONTRACTOR SHALL PROVIDE 120 VOLT POWER CONNECTIONS TO ALL LINE-VOLTAGE CAMERAS.

ACCESS CONTROL SYSTEM:
- A. CARD READERS: CFCI - SEE DIVISION 08 HARDWARE SPECIFICATION
- B. ACCESS CONTROL PANELS: CFCI
  - a. SEE DIVISION 28 ACCESS CONTROL SPECIFICATION. THE NEW ACCESS CONTROL PANELS WILL BE REQUIRED TO CONNECT BACK TO THE EXISTING ACCESS CONTROL SYSTEM IN ELEC/SERVER ROOM 112. CONTRACTOR TO PROVIDE AND INSTALL THE REQUIRED CABLES AND CONNECTORS FOR THE CONNECTIONS BETWEEN THE EXISTING AND NEW ACCESS CONTROL PANELS.
- C. CABLES BETWEEN CARD READERS AND ACCESS CONTROL PANEL IN COMMUNICATION ROOM WITH PANDUIT MINICOM CONNECTORS ON BOTH ENDS: CFCI
  - a. CONTRACTOR TO VERIFY WITH OWNER COLOR OF CABLE DESIRED BY OWNER FOR ACCESS CONTROL SYSTEM.
  - b. CONTRACTOR TO PROVIDE CABLE LABELS ON BOTH ENDS OF THE CABLE, COORDINATE WITH OWNER'S IT DEPARTMENT FOR DESIRED LABELING VERBIAGE.
- D. CONDUIT RACEWAY SYSTEM AND JUNCTION BOXES BETWEEN CARD READERS AND ACCESS CONTROL PANELS IN COMMUNICATION ROOMS: CFCI
- E. WHERE ANY OF THE CARD READERS REQUIRE LINE-VOLTAGE POWER AT THE DOORS FOR A LOCALIZED POWER SUPPLY, CONTRACTOR SHALL PROVIDE AND INSTALL THE REQUIRED POWER. CONTRACTOR SHALL COORDINATE WITH DOOR HARDWARE PROVIDER AND DOOR INSTALLER FOR PROVIDING AND INSTALLING ALL REQUIRED CONDUIT ROUGH-INS AROUND THE DOOR FRAMES TO THE CEILINGS.

AI PHONE:
- A. AI PHONE: CFCI - SEE DIVISION 08 HARDWARE SPECIFICATION
  - a. AIPHONE TO BE INSTALLED IN CONTROL TOWER.
- B. CABLES BETWEEN AIPHONE RACK IN COMMUNICATION ROOM WITH PANDUIT MINICOM CONNECTORS ON BOTH ENDS: CFCI
  - a. CONTRACTOR TO VERIFY WITH OWNER COLOR OF CABLE DESIRED BY OWNER FOR AIPHONE SYSTEM.
  - b. CONTRACTOR TO PROVIDE CABLE LABELS ON BOTH ENDS OF THE CABLE, COORDINATE WITH OWNER'S IT DEPARTMENT FOR DESIRED LABELING VERBIAGE.
- C. CONDUIT RACEWAY SYSTEM AND JUNCTION BOXES BETWEEN AIPHONE AND RACK IN COMMUNICATION ROOM: CFCI
- D. WHERE AIPHONE REQUIRES LINE-VOLTAGE POWER AT THE DOORS VIA A LOCALIZED POWER SUPPLY, CONTRACTOR SHALL PROVIDE AND INSTALL THE REQUIRED POWER. CONTRACTOR SHALL COORDINATE WITH DOOR HARDWARE PROVIDER AND DOOR INSTALLER FOR PROVIDING AND INSTALLING ALL REQUIRED CONDUIT ROUGH-INS AROUND THE DOOR FRAMES TO THE CEILINGS AND TO THE CONTROL TOWER.

WIRELESS ACCESS POINTS (WAPs):
- A. WAPs: OFOI
- B. CABLES BETWEEN WAPs AND RACK IN COMMUNICATION ROOM WITH PANDUIT MINICOM CONNECTORS ON BOTH ENDS: CFCI
  - a. CONTRACTOR TO VERIFY WITH OWNER COLOR OF CABLE DESIRED BY OWNER FOR WAPs.
  - b. CONTRACTOR TO PROVIDE CABLE LABELS ON BOTH ENDS OF THE CABLE, COORDINATE WITH OWNER'S IT DEPARTMENT FOR DESIRED LABELING VERBIAGE.
- C. CONDUIT RACEWAY SYSTEM AND JUNCTION BOXES BETWEEN WAPs AND RACK IN COMMUNICATION ROOM: CFCI
- D. WHERE ANY WAPs INSTALLED ARE OTHER THAN LOW-VOLTAGE (POE), THE CONTRACTOR SHALL PROVIDE 120 VOLT POWER CONNECTIONS TO ALL LINE-VOLTAGE WAPs.
- E. OWNER WILL FURNISH, INSTALL, CONFIGURE, AND MANAGE THE WAPs.

DATA/PHONE SYSTEMS:
- A. SERVERS: OFOI
- B. NETWORK SWITCHES: OFOI
- C. NETWORK ROUTERS: OFOI
- D. TELEPHONE PUNCH DOWN BLOCKS: CFCI
  - a. REFER TO DIVISION 27 SPECIFICATIONS.
- E. DATA OUTLETS (FACEPLATE AND JACKS): CFCI
  - a. REFER TO DIVISION 27 SPECIFICATIONS.
- F. CABLES BETWEEN DATA OUTLETS AND RACK IN COMMUNICATION ROOM WITH PANDUIT MINICOM CONNECTORS ON BOTH ENDS: CFCI
  - a. CONTRACTOR TO VERIFY WITH OWNER COLOR OF CABLE DESIRED BY OWNER FOR DATA/PHONE.
  - b. CONTRACTOR TO PROVIDE CABLE LABELS ON BOTH ENDS OF THE CABLE, COORDINATE WITH OWNER'S IT DEPARTMENT FOR DESIRED LABELING VERBIAGE.
- G. CONDUIT RACEWAY SYSTEM AND JUNCTION BOXES BETWEEN DATA OUTLETS AND RACK IN COMMUNICATION ROOM: CFCI
- H. RACKS, CABLE TRAY, CABLE MANAGEMENT, PATCH PANELS, CONNECTION BLOCKS, ETC.: CFCI
  - a. REFER TO DIVISIONS 26 AND 27 SPECIFICATIONS.

CAR CAMERA DOWNLOAD STATION:
- A. CONTRACTOR TO REMOVE EXISTING RECEIVER AND RELOCATE TO NEW LOCATION ON BACK OF NEW BUILDING ADDITION AT JUNCTION BOX SHOWN ON EXTERIOR WALL BETWEEN OFFICES 127 AND 128. CONTRACTOR TO PROVIDE NEW CABLING BETWEEN RECEIVER'S NEW LOCATION AND EXISTING EQUIPMENT THE RECEIVER IS CONNECTED TO, UNLESS OTHERWISE NOTED BY OWNER'S IT DEPARTMENT TO CONNECT TO ANOTHER LOCATION, VERIFY WITH OWNER PRIOR TO RUNNING NEW CABLE. NEW CABLE SHALL BE AT A MINIMUM THE SAME TYPE AS EXISTING; HOWEVER, IF EXISTING CABLE IS A CAT 5 OR CAT5e CABLE THEN PROVIDE THE CAT 6 CABLE.

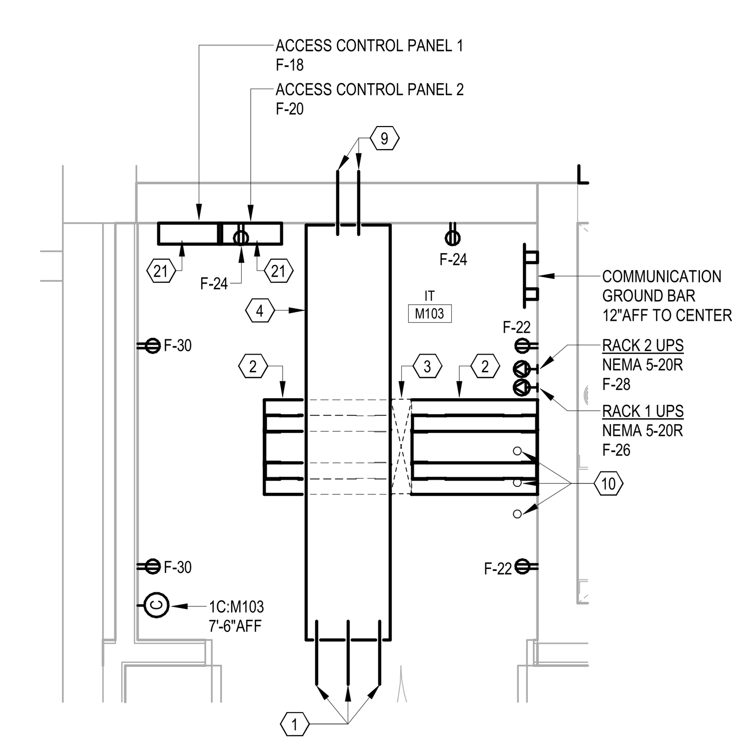

ENLARGED IT M103

SCALE: 1/2" = 1'-0"

SCALE: 1/2" = 1' - 0"
SCALE: 1/8" = 1' - 0"

SPECTRUM DESIGN
architects | engineers
Plaza Suite 1
10 Church Avenue, SE
Roanoke, VA 24011
540.342.6001
spectrumpc.com

LPA
LAWRENCE PERRY & ASSOCIATES
Consulting Engineers
15 E Salem Avenue SE, Suite 101
Roanoke, Virginia 24011
Ph: (540) 342-1816
Fax: (540) 344-3410
Comm. No.: 25114

© Lawrence Perry and Associates, Inc.

BEDFORD COUNTY SHERIFF'S OFFICE EXPANSION

SPECTRUM DESIGN PROJECT NO.: **24112**

COMMONWEALTH OF VIRGINIA
05/04/2026
WINSTON A. MATTHEWS
Lic. No. 044469
PROFESSIONAL ENGINEER

PROJ. MGR.: **RCH** CHECKED BY: **WAM** DRAWN BY: **MAS**

SHEET ISSUE DATE:
05.04.2026

PROJECT PHASE:
BID DOCUMENTS

SHEET REVISIONS:

PLAN NORTH — SITE NORTH

SHEET NAME:
FLOOR PLANS - COMMUNICATIONS

SHEET NUMBER:
E301

ORIGINAL SIZE : ARCH E1 (30X42) | 5/4/2026 3:39:00 PM
C:\Users\mas\OneDrive - Lawrence Perry And Associates\Documents\25114 - Bedford Sheriff's Office - ELEC - R26_msmithQTWNS.rvt

PLAN NOTES: (#)

1. ALL EXISTING FIRE ALARM DEVICES IN THIS ROOM/SPACE SHALL REMAIN AS INSTALLED.
2. EXISTING FACP TO BE DISCONNECTED FROM EXISTING CIRCUIT A-9 AND FED FROM NEW CIRCUIT LS-3.
3. ELECTRICAL CONTRACTOR TO COORDINATE INSTALLATION LOCATION OF FLOW SWITCH(ES) WITH SPRINKLER CONTRACTOR.

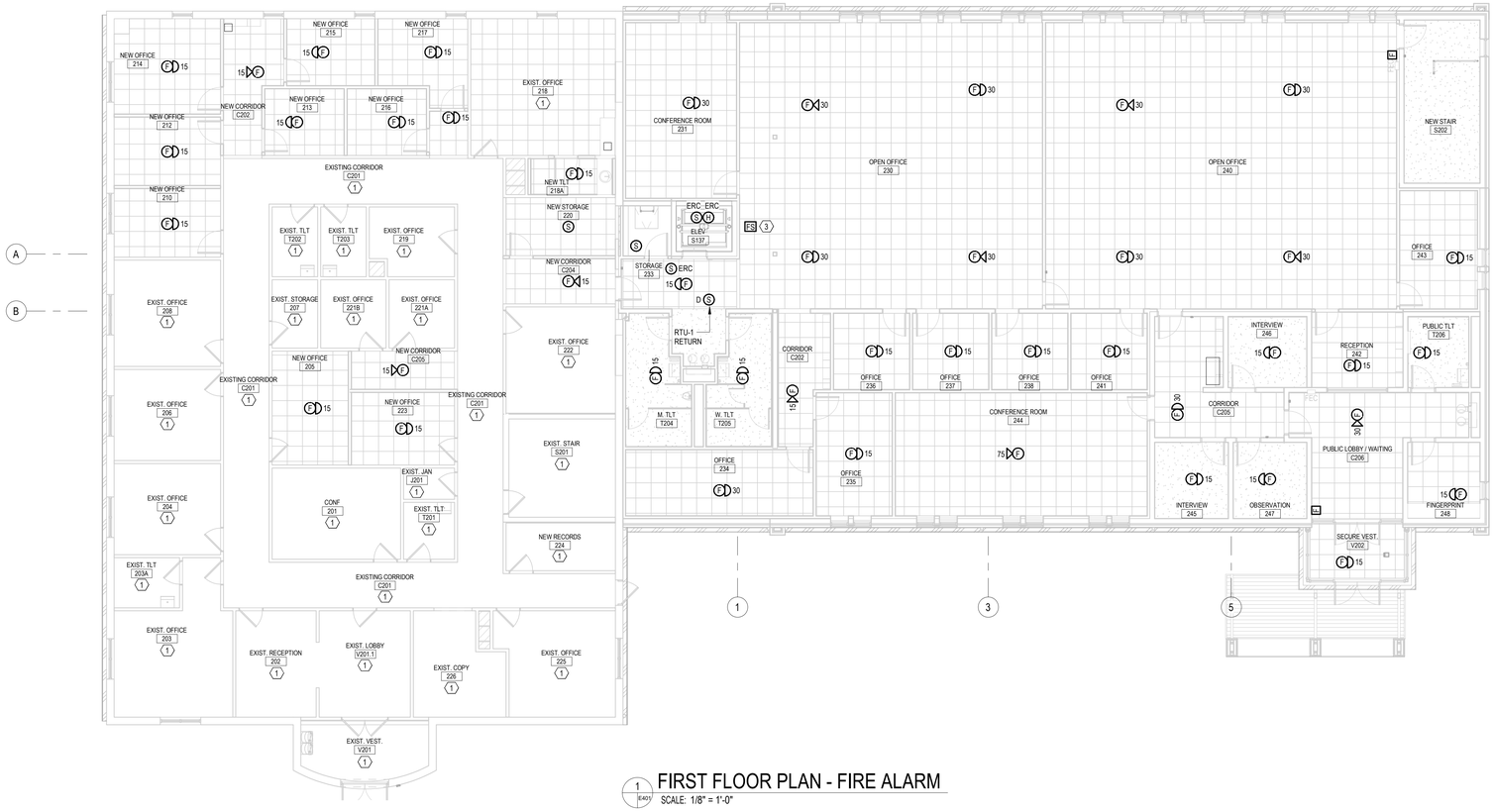

1 (E401) FIRST FLOOR PLAN - FIRE ALARM
SCALE: 1/8" = 1'-0"

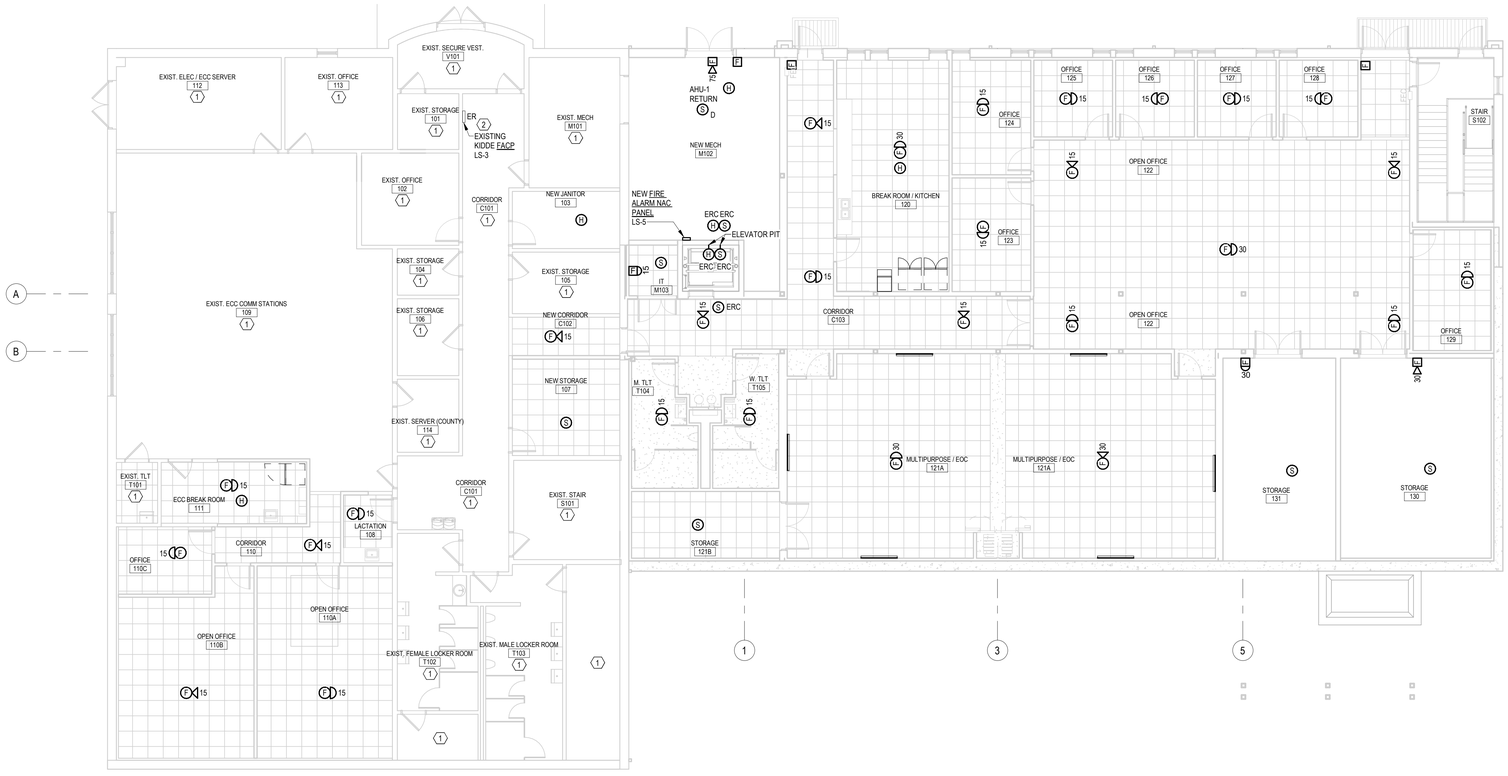

2 (E401) GROUND FLOOR PLAN - FIRE ALARM
SCALE: 1/8" = 1'-0"

0 4' 8' 16'
SCALE: 1/8" = 1'-0"

SPECTRUM DESIGN
architects | engineers

Plaza Suite 1
10 Church Avenue, SE
Roanoke, VA 24011

540.342.6001
spectrumpc.com

LPA
LAWRENCE PERRY & ASSOCIATES
Consulting Engineers
15 E Salem Avenue SE, Suite 101
Roanoke, Virginia 24011
Ph: (540).342-1816
Fax: (540).344-3410
Comm. No.: 25114

© Lawrence Perry and Associates, Inc.

BEDFORD COUNTY SHERIFF'S OFFICE EXPANSION

SPECTRUM DESIGN PROJECT NO.: **24112**

COMMONWEALTH OF VIRGINIA
05/04/2026
WINSTON A. MATTHEWS
Lic. No. 044469
PROFESSIONAL ENGINEER

PROJ. MGR.: **RCH**
CHECKED BY: **WAM**
DRAWN BY: **MAS**

SHEET ISSUE DATE:
05.04.2026

PROJECT PHASE:
BID DOCUMENTS

SHEET REVISIONS:

PLAN NORTH
SITE NORTH

SHEET NAME:
FLOOR PLANS - FIRE ALARM

SHEET NUMBER:
E401

ORIGINAL SIZE: ARCH E1 (30X42) | 5/4/2026 3:39:02 PM
C:\Users\mas\OneDrive - Lawrence Perry And Associates\Documents\25114 - Bedford Sheriff's Office - EECC - R23L_masmk2@WAM.rvt

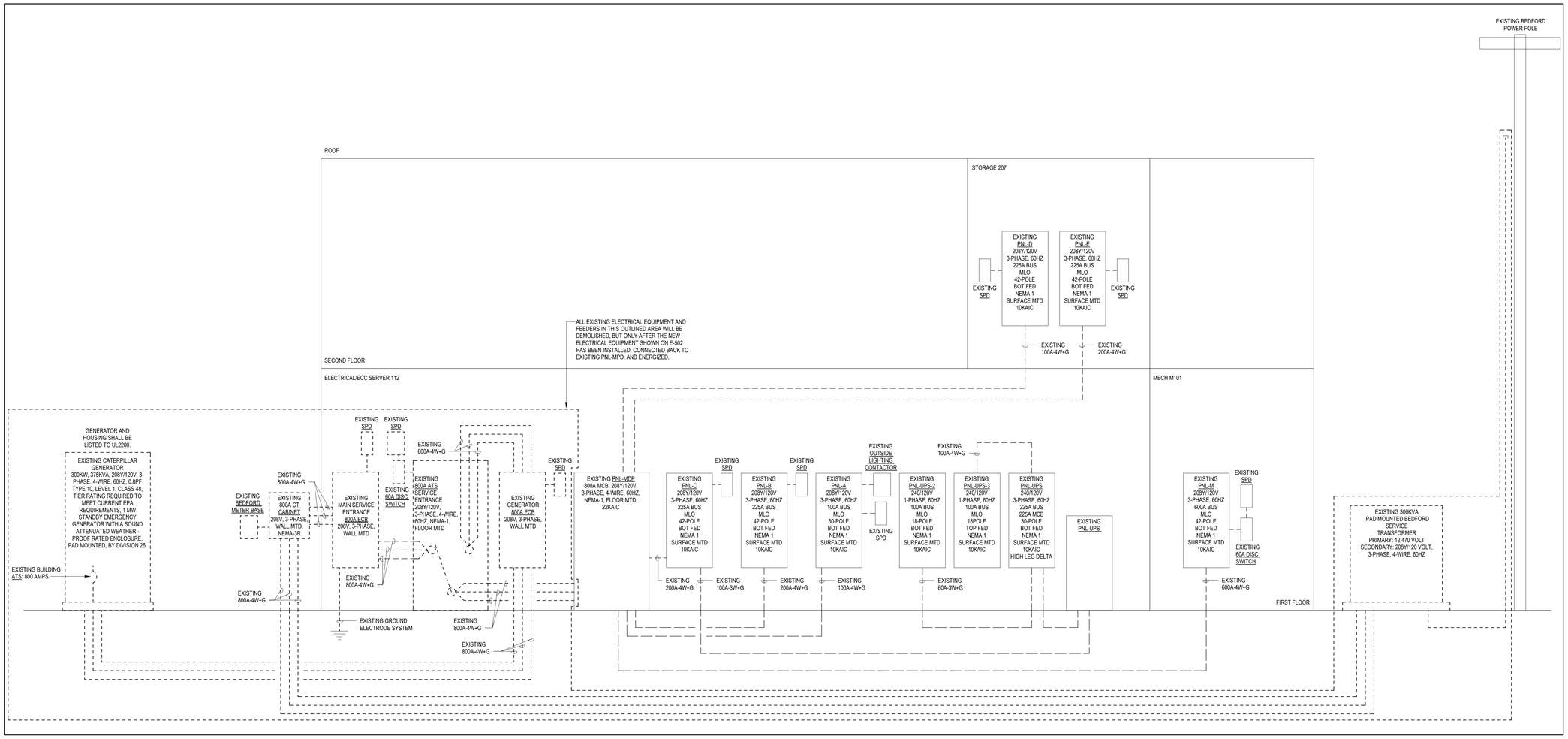

1 E501 EXISTING ELECTRICAL RISER DIAGRAM
SCALE: NONE

SPECTRUM DESIGN
architects | engineers

Plaza Suite 1
10 Church Avenue, SE
Roanoke, VA 24011

540.342.6001
spectrumpc.com

LPA
LAWRENCE PERRY & ASSOCIATES
Consulting Engineers
15 E Salem Avenue SE, Suite 101
Roanoke, Virginia 24011
Ph: (540) 342-1816
Fax: (540) 344-3410
Comm. No.: 25114

© Lawrence Perry and Associates, Inc.

BEDFORD COUNTY SHERIFF'S OFFICE EXPANSION

SPECTRUM DESIGN PROJECT NO.: **24112**

COMMONWEALTH OF VIRGINIA
05/04/2026
WINSTON A. MATTHEWS
Lic. No. 044469
PROFESSIONAL ENGINEER

PROJ. MGR.: **RCH**
CHECKED BY: **WAM**
DRAWN BY: **MAS**

SHEET ISSUE DATE:
05.04.2026

PROJECT PHASE:
BID DOCUMENTS

SHEET REVISIONS:

PLAN NORTH
SITE NORTH

SHEET NAME:
EXISTING ELECTRICAL RISER DIAGRAM

SHEET NUMBER:
E501

ORIGINAL SIZE: ARC24 E1 (30X42) | 5/4/2026 3:29:03 PM
C:\Users\mcsc\OneDrive - Greenice & Perry And Associates\Documents\25114 - Bedford Sheriff's Office - ELEC - R26_mcsmc@24x36.rvt

FEEDER SCHEDULE

DESIGNATION		DESCRIPTION
25A-3W+G		COPPER: (3) #10 AWG CU + (1) #10 AWG CU GND IN 1/2" CONDUIT.
50A-4W+G		COPPER: (4) #8 AWG CU + (1) #10 AWG CU GND IN 3/4" CONDUIT.
60A-3W+G-VD		COPPER: (3) #1 AWG CU + (1) #4 AWG CU GND IN 1-1/2" CONDUIT.
100A-4W+G		COPPER: (4) #3 AWG CU + (1) #8 AWG CU GND IN 1-1/2" CONDUIT.
	OR	ALUMINUM: (4) #1 AWG AL + (1) #6 AWG AL GND IN 1-1/2" CONDUIT.
200A-4W+G		COPPER: (4) #3/0 AWG CU + (1) #6 AWG CU GND IN 2-1/2" CONDUIT.
	OR	ALUMINUM: (4) #250 MCM AL + (1) #4 AWG AL GND IN 2-1/2" CONDUIT.
500A-XFMR		COPPER: 2 SETS OF [(4) #250 MCM CU] IN (2) 3" CONDUITS, (1) #1/0 AWG CU GEC IN 1" CONDUIT, AND (1) #1/0 AWG CU BONDING JUMPER IN 1" CONDUIT.
	OR	ALUMINUM: 2 SETS OF [(4) #350 MCM AL] IN (2) 3" CONDUITS, (1) #3/0 AWG AL GEC IN 1" CONDUIT, AND (1) #3/0 AWG AL BONDING JUMPER IN 1" CONDUIT.
600A-4W+G		COPPER: 2 SETS OF [(4) #350 MCM AWG CU + (1) #1 AWG CU GND] IN (2) 4" CONDUITS.
	OR	ALUMINUM: 2 SETS OF [(4) #500 MCM AL + (1) #2/0 AWG AL GND] IN (2) 4" CONDUITS.
800A-4W+G		COPPER: 2 SETS OF [(4) #600 MCM CU + (1) #1/0 AWG CU GND] IN (2) 4" CONDUITS.
	OR	ALUMINUM: 3 SETS OF [(4) #400 MCM AL + (1) #3/0 AWG AL GND] IN (3) 4" CONDUITS.
1000A-4W+G		COPPER: 3 SETS OF [(4) #400 MCM CU + (1) #2/0 AWG CU GND] IN (2) 4" CONDUITS.
	OR	ALUMINUM: 3 SETS OF [(4) #600 MCM AL + (1) #4/0 AWG AL GND] IN (3) 4" CONDUITS.

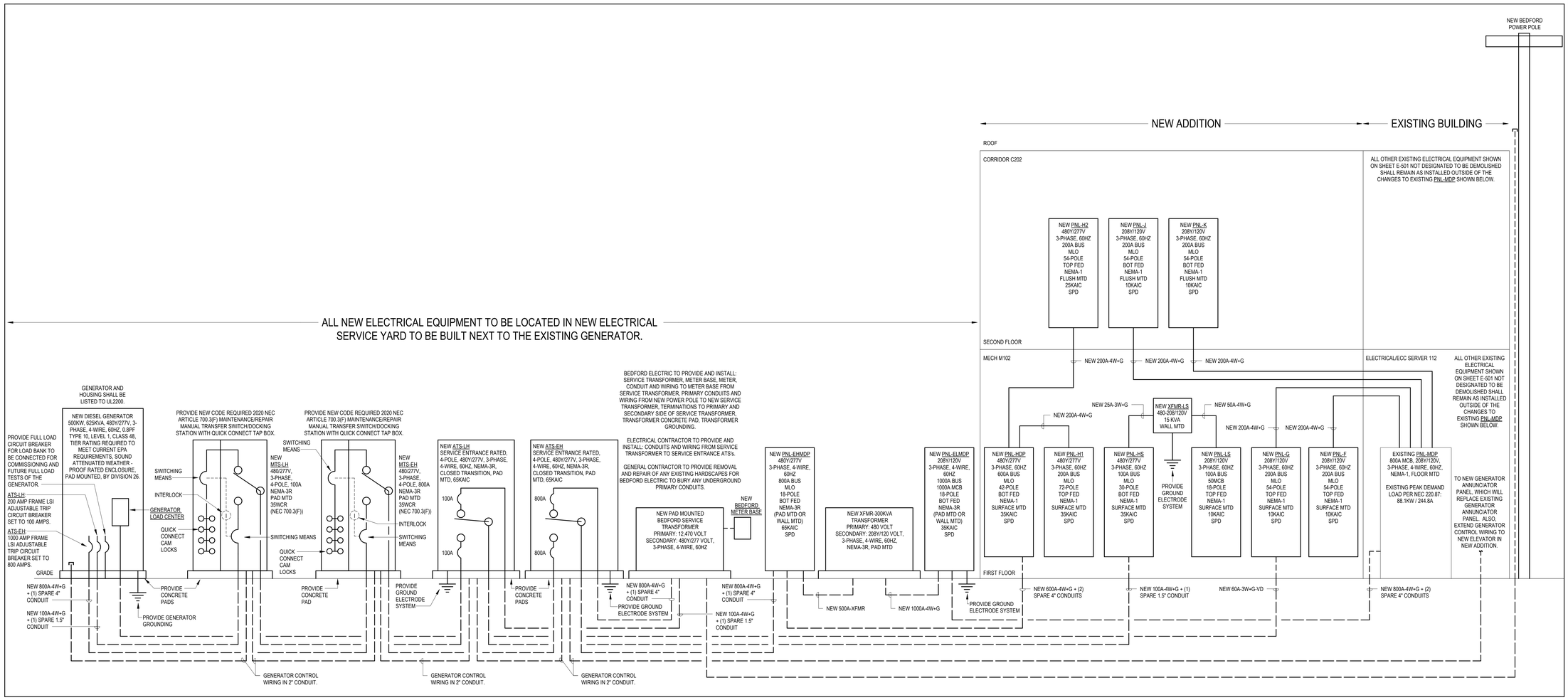

1 NEW ELECTRICAL RISER DIAGRAM
E502
SCALE: NONE

SPECTRUM DESIGN
architects | engineers

Plaza Suite 1
10 Church Avenue, SE
Roanoke, VA 24011

540.342.6001
spectrumpc.com

LPA
LAWRENCE PERRY & ASSOCIATES
Consulting Engineers
15 E Salem Avenue SE, Suite 101
Roanoke, Virginia 24011
Ph: (540) 342-1816
Fax: (540) 344-3410
Comm. No.: 25114

© Lawrence Perry and Associates, Inc.

BEDFORD COUNTY SHERIFF'S OFFICE EXPANSION

SPECTRUM DESIGN PROJECT NO.: **24112**

COMMONWEALTH OF VIRGINIA
05/04/2026
WINSTON A. MATTHEWS
Lic. No. 044469
PROFESSIONAL ENGINEER

PROJ. MGR.:	CHECKED BY:	DRAWN BY:
RCH	WAM	MAS

SHEET ISSUE DATE:
05.04.2026

PROJECT PHASE:
BID DOCUMENTS

SHEET REVISIONS:

PLAN NORTH
SITE NORTH

SHEET NAME:
NEW ELECTRICAL RISER DIAGRAM

SHEET NUMBER:
E502

ORIGINAL SIZE: ARCH E1 (30X42) | 5/4/2026 3:29:03 PM
C:\Users\mcc\OneDrive - Greenice\ Perry And Associates\Documents\25114 - Bedford Sheriff's Office - ELEC - R26_revsmr\24N26.rvt

EXISTING PANEL A

VOLTAGE: 208Y/120V
SYSTEM: 3PH, 4W
SOLID NEUTRAL: YES

MAIN: 100A MLO
BUS RATING: 100A
GROUND BUS: YES

INTEGRAL SPD: NO
MOUNTING: SURFACE
INTERRUPT RATING: 10,000 AIC

CKT	LOAD SERVED	BKR	PHASE	NEUT	GND	COND	DMD	L1	L2	L3	CKT	LOAD SERVED	BKR	PHASE	NEUT	GND	COND	DMD	L1	L2	L3
1	LIGHTS	20/1	#12	#12	#12	3/4"	L	-			2	REC - RM 120	20/2	#12	#12	#12	3/4"	R	-		
3	LIGHTS	20/1	#12	#12	#12	3/4"	L		-		4	REC - RM 120	-	#12	-	-	-	R		-	
5	CAMERA	15/1	#12	#12	#12	3/4"	C			-	6	WALL HEATER	20/2	#12	-	#12	3/4"	H			-
7	DOOR POWER SUPPLY	15/1	#12	#12	#12	3/4"	C	-			8	WALL HEATER	-	#12	-	-	-	H	-		
9	FIRE ALARM CONTROL PANEL (FACP)	20/1	#12	#12	#12	3/4"	C		-		10	OUTSIDE LIGHT CONTACTOR & TIME CLOCK	20/1	#12	#12	#12	3/4"	L		-	
11	VMB COMPUTER REC	20/1	#12	#12	#12	3/4"	R			-	12	OUTSIDE LIGHTS	20/1	#12	#12	#12	3/4"	L			-
13	VMB TANK MONITOR	20/1	#12	#12	#12	3/4"	N	-			14	UNKNOWN LOAD	20/1	#12	#12	#12	3/4"	L	-		
15	VMB FUEL PUMP	20/1	#12	#12	#12	3/4"	N		-		16	POLE LIGHTS	20/2	#12	-	#12	1"	L		-	
17	SPARE (OLD VMB GATE MONITOR)	20/1	-	-	-	-	-			-	18	POLE LIGHTS	-	#12	-	-	-	L			-
19	SPARE	20/1	-	-	-	-	-	-			20	POLE LIGHTS	20/2	#12	-	#12	1"	L	-		
21	UNKNOWN LOAD	40/2	-	-	-	-	-		-		22	POLE LIGHTS	-	#12	-	-	-	L		-	
23	UNKNOWN LOAD	-	-	-	-	-	-			-	24	POLE LIGHTS	20/2	#12	-	#12	1"	L			-
25	SPD	30/3	#12	#12	#12	3/4"	N	-			26	POLE LIGHTS	-	#12	-	-	-	L	-		
27	SPD	-	#12	-	-	-	N		-		28	POLE LIGHTS	20/2	#12	-	#12	1"	L		-	
29	SPD	-	#12	-	-	-	N			-	30	POLE LIGHTS	-	#12	-	-	-	L			-
																		PHASE LOAD TOTALS	0	0	0

LOADS (KVA)	CONNECTED	DEMAND FACTOR	DEMAND
LIGHTING	0	1.25	0
REC TO 10 KVA	0	1.0	0
REC REMAINING	0	0.5	0
SPACE HEATING	0	0.0	0
AIR CONDITIONING	0	1.0	0
NON-SEASONAL MOTORS	0	1.0	0
LARGEST MOTOR	0	0.25	0
WATER HEATING	0	1.0	0

LOADS (KVA)	CONNECTED	DEMAND FACTOR	DEMAND	
KITCHEN EQUIPMENT	0	1.0	0	
CONTINUOUS	0	1.25	0	
NON-CONTINUOUS	0	1.0	0	
DEMAND	0	1.0	0	
TOTAL CONNECTED LOAD	0	KVA	0	AMPS
MIN. FEEDER / PANEL CAPACITY	0	KVA	0	AMPS
OVERALL DEMAND FACTOR	1			

MODIFIED PANEL A

VOLTAGE: 208Y/120V
SYSTEM: 3PH, 4W
SOLID NEUTRAL: YES

MAIN: 100A MLO
BUS RATING: 100A
GROUND BUS: YES

INTEGRAL SPD: NO
MOUNTING: SURFACE
INTERRUPT RATING: 10,000 AIC

CKT	LOAD SERVED	BKR	PHASE	NEUT	GND	COND	DMD	L1	L2	L3	CKT	LOAD SERVED	BKR	PHASE	NEUT	GND	COND	DMD	L1	L2	L3
1	LIGHTS	20/1	#12	#12	#12	3/4"	L	-			2	REC - RM 120	20/2	#12	#12	#12	3/4"	R	-		
3	LIGHTS	20/1	#12	#12	#12	3/4"	L		-		4	REC - RM 120	-	#12	-	-	-	R		-	
5	CAMERA	15/1	#12	#12	#12	3/4"	C			-	6	WALL HEATER	20/2	#12	-	#12	3/4"	H			-
7	DOOR POWER SUPPLY	15/1	#12	#12	#12	3/4"	C	-			8	WALL HEATER	-	#12	-	-	-	H	-		
9	* SPARE	20/1	#12	#12	#12	3/4"	-		-		10	OUTSIDE LIGHT CONTACTOR & TIME CLOCK	20/1	#12	#12	#12	3/4"	L		-	
11	VMB COMPUTER REC	20/1	#12	#12	#12	3/4"	R			-	12	OUTSIDE LIGHTS	20/1	#12	#12	#12	3/4"	L			-
13	VMB TANK MONITOR	20/1	#12	#12	#12	3/4"	N	-			14	UNKNOWN LOAD	20/1	#12	#12	#12	3/4"	L	-		
15	VMB FUEL PUMP	20/1	#12	#12	#12	3/4"	N		-		16	POLE LIGHTS	20/2	#12	-	#12	1"	L		-	
17	SPARE (OLD VMB GATE MONITOR)	20/1	-	-	-	-	-			-	18	POLE LIGHTS	-	#12	-	-	-	L			-
19	SPARE	20/1	-	-	-	-	-	-			20	POLE LIGHTS	20/2	#12	-	#12	1"	L	-		
21	UNKNOWN LOAD	40/2	-	-	-	-	-		-		22	POLE LIGHTS	-	#12	-	-	-	L		-	
23	UNKNOWN LOAD	-	-	-	-	-	-			-	24	POLE LIGHTS	20/2	#12	-	#12	1"	L			-
25	SPD	30/3	#12	#12	#12	3/4"	N	-			26	POLE LIGHTS	-	#12	-	-	-	L	-		
27	SPD	-	#12	-	-	-	N		-		28	POLE LIGHTS	20/2	#12	-	#12	1"	L		-	
29	SPD	-	#12	-	-	-	N			-	30	POLE LIGHTS	-	#12	-	-	-	L			-
																		PHASE LOAD TOTALS	0	0	0

LOADS (KVA)	CONNECTED	DEMAND FACTOR	DEMAND
LIGHTING	0	1.25	0
REC TO 10 KVA	0	1.0	0
REC REMAINING	0	0.5	0
SPACE HEATING	0	0.0	0
AIR CONDITIONING	0	1.0	0
NON-SEASONAL MOTORS	0	1.0	0
LARGEST MOTOR	0	0.25	0
WATER HEATING	0	1.0	0

LOADS (KVA)	CONNECTED	DEMAND FACTOR	DEMAND	
KITCHEN EQUIPMENT	0	1.0	0	
CONTINUOUS	0	1.25	0	
NON-CONTINUOUS	0	1.0	0	
DEMAND	0	1.0	0	
TOTAL CONNECTED LOAD	0	KVA	0	AMPS
MIN. FEEDER / PANEL CAPACITY	0	KVA	0	AMPS
OVERALL DEMAND FACTOR	1			

EXISTING PANEL C

VOLTAGE: 208Y/120V
SYSTEM: 3PH, 4W
SOLID NEUTRAL: YES

MAIN: 225A MLO
BUS RATING: 225A
GROUND BUS: YES

INTEGRAL SPD: NO
MOUNTING: SURFACE
INTERRUPT RATING: 10,000 AIC

CKT	LOAD SERVED	BKR	PHASE	NEUT	GND	COND	DMD	L1	L2	L3	CKT	LOAD SERVED	BKR	PHASE	NEUT	GND	COND	DMD	L1	L2	L3
1	GENERATOR BATTERY CHARGER	20/1	#12	#12	#12	3/4"	N	-			2	REC - RM 104	20/1	#12	#12	#12	3/4"	R	-		
3	GENERATOR BLOCK HEATER	20/2	#12	-	#12	3/4"	N		-		4	REC - RM 104	20/1	#12	#12	#12	3/4"	R		-	
5	GENERATOR BLOCK HEATER	-	#12	-	-	-	N			-	6	REC - RM 104	20/1	#12	#12	#12	3/4"	R			-
7	RADIO RACK	20/1	#12	#12	#12	3/4"	C	-			8	REC - RM 104	20/1	#12	#12	#12	3/4"	R	-		
9	UNKNOWN LOAD	20/1	#12	#12	#12	3/4"	-		-		10	REC - RM 104	20/1	#12	#12	#12	3/4"	R		-	
11	REC - RM 104	20/1	#12	#12	#12	3/4"	R			-	12	REC - RM 104	20/1	#12	#12	#12	3/4"	R			-
13	UNKNOWN LOAD	20/1	#12	#12	#12	3/4"	-	-			14	REC - RM 104	20/1	#12	#12	#12	3/4"	R	-		
15	UNKNOWN LOAD	20/1	#12	#12	#12	3/4"	-		-		16	REC - RM 104	20/1	#12	#12	#12	3/4"	R		-	
17	UNKNOWN LOAD	20/1	#12	#12	#12	3/4"	-			-	18	REC - RM 104	20/1	#12	#12	#12	3/4"	R			-
19	UNKNOWN LOAD	20/1	#12	#12	#12	3/4"	-	-			20	REC - RM 104	20/1	#12	#12	#12	3/4"	R	-		
21	UNKNOWN LOAD	20/1	#12	#12	#12	3/4"	-		-		22	REC - RM 104	20/1	#12	#12	#12	3/4"	R		-	
23	UNKNOWN LOAD	20/1	#12	#12	#12	3/4"	-			-	24	REC - RM 104	20/1	#12	#12	#12	3/4"	R			-
25	UNKNOWN LOAD	20/1	#12	#12	#12	3/4"	-	-			26	REC - RM 104	20/1	#12	#12	#12	3/4"	R	-		
27	REC - RM 110	20/1	#12	#12	#12	3/4"	R		-		28	REC - RM 104	20/1	#12	#12	#12	3/4"	R		-	
29	REC - RM 110	20/1	#12	#12	#12	3/4"	R			-	30	SPD	30/3	#12	#12	#12	3/4"	N			-
31	REC - RM 110	20/1	#12	#12	#12	3/4"	R	-			32	SPD	-	#12	-	-	-	N	-		
33	REC - RM 111	20/1	#12	#12	#12	3/4"	R		-		34	SPD	-	#12	-	-	-	N		-	
35	REC - PRINTER	20/1	#12	#12	#12	3/4"	R			-	36	SPARE	100/2	-	-	-	-	-			-
37	REC - PRINTER	20/1	#12	#12	#12	3/4"	R	-			38	SPARE	-	-	-	-	-	-	-		
39	REC - PRINTER	20/1	#12	#12	#12	3/4"	R		-		40	UPS	100/2	#3	#3	#8	1-1/4"	C		-	
41	DAMPER MOTOR TRANSFORMER	20/1	#12	#12	#12	3/4"	C			-	42	UPS	-	#3	-	-	-	C			-
																		PHASE LOAD TOTALS	0	0	0

LOADS (KVA)	CONNECTED	DEMAND FACTOR	DEMAND
LIGHTING	0	1.25	0
REC TO 10 KVA	0	1.0	0
REC REMAINING	0	0.5	0
SPACE HEATING	0	0.0	0
AIR CONDITIONING	0	1.0	0
NON-SEASONAL MOTORS	0	1.0	0
LARGEST MOTOR	0	0.25	0
WATER HEATING	0	1.0	0

LOADS (KVA)	CONNECTED	DEMAND FACTOR	DEMAND	
KITCHEN EQUIPMENT	0	1.0	0	
CONTINUOUS	0	1.25	0	
NON-CONTINUOUS	0	1.0	0	
DEMAND	0	1.0	0	
TOTAL CONNECTED LOAD	0	KVA	0	AMPS
MIN. FEEDER / PANEL CAPACITY	0	KVA	0	AMPS
OVERALL DEMAND FACTOR	1			

EXISTING PANEL B

VOLTAGE: 208Y/120V
SYSTEM: 3PH, 4W
SOLID NEUTRAL: YES

MAIN: 225A MLO
BUS RATING: 225A
GROUND BUS: YES

INTEGRAL SPD: NO
MOUNTING: SURFACE
INTERRUPT RATING: 10,000 AIC

CKT	LOAD SERVED	BKR	PHASE	NEUT	GND	COND	DMD	L1	L2	L3	CKT	LOAD SERVED	BKR	PHASE	NEUT	GND	COND	DMD	L1	L2	L3
1	LIGHTS	20/1	#12	#12	#12	3/4"	L	-			2	EXIT SIGNS	20/1	#12	#12	#12	3/4"	L	-		
3	LIGHTS	20/1	#12	#12	#12	3/4"	L		-		4	REC - RM 119	20/1	#12	#12	#12	3/4"	R		-	
5	LIGHTS	20/1	#12	#12	#12	3/4"	L			-	6	REC - RM 114, 116	20/1	#12	#12	#12	3/4"	R			-
7	LIGHTS	20/1	#12	#12	#12	3/4"	L	-			8	REC - RM 114	20/1	#12	#12	#12	3/4"	R	-		
9	LIGHTS	20/1	#12	#12	#12	3/4"	L		-		10	REC - RM 118	20/1	#12	#12	#12	3/4"	R		-	
11	LIGHTS	20/1	#12	#12	#12	3/4"	L			-	12	REC - RM 115	20/1	#12	#12	#12	3/4"	R			-
13	LIGHTS	20/1	#12	#12	#12	3/4"	L	-			14	REC - RM 115	20/1	#12	#12	#12	3/4"	R	-		
15	LIGHTS	20/1	#12	#12	#12	3/4"	L		-		16	REC - RM 112, 115	20/1	#12	#12	#12	3/4"	R		-	
17	LIGHTS	20/1	#12	#12	#12	3/4"	L			-	18	REC - RM 106, 121	20/1	#12	#12	#12	3/4"	R			-
19	LIGHTS	20/1	#12	#12	#12	3/4"	L	-			20	REC - RM 106	20/1	#12	#12	#12	3/4"	R	-		
21	LIGHTS	20/1	#12	#12	#12	3/4"	L		-		22	REC - RM 106	20/1	#12	#12	#12	3/4"	R		-	
23	LIGHTS	20/1	#12	#12	#12	3/4"	L			-	24	REC - RM 106	20/1	#12	#12	#12	3/4"	R			-
25	LIGHTS	20/1	#12	#12	#12	3/4"	L	-			26	REC - RM 106	20/1	#12	#12	#12	3/4"	R	-		
27	LIGHTS	20/1	#12	#12	#12	3/4"	L		-		28	REC - RM 106	20/1	#12	#12	#12	3/4"	R		-	
29	LIGHTS	20/1	#12	#12	#12	3/4"	L			-	30	REC - RM 108, 121	20/1	#12	#12	#12	3/4"	R			-
31	LIGHTS	20/1	#12	#12	#12	3/4"	L	-			32	REC - RM 101	20/1	#12	#12	#12	3/4"	R	-		
33	LIGHTS	20/1	#12	#12	#12	3/4"	L		-		34	REC - RM 101	20/1	#12	#12	#12	3/4"	R		-	
35	LIGHTS	20/1	#12	#12	#12	3/4"	L			-	36	REC - RM 102	20/1	#12	#12	#12	3/4"	R			-
37	SPD	30/3	#12	#12	#12	3/4"	N	-			38	REC - RM 102	20/1	#12	#12	#12	3/4"	R	-		
39	SPD	-	#12	-	-	-	N		-		40	EWC	20/1	#12	#12	#12	3/4"	N		-	
41	SPD	-	#12	-	-	-	N			-	42	REC - ELEC RM	20/1	#12	#12	#12	3/4"	R			-
																		PHASE LOAD TOTALS	0	0	0

LOADS (KVA)	CONNECTED	DEMAND FACTOR	DEMAND
LIGHTING	0	1.25	0
REC TO 10 KVA	0	1.0	0
REC REMAINING	0	0.5	0
SPACE HEATING	0	0.0	0
AIR CONDITIONING	0	1.0	0
NON-SEASONAL MOTORS	0	1.0	0
LARGEST MOTOR	0	0.25	0
WATER HEATING	0	1.0	0

LOADS (KVA)	CONNECTED	DEMAND FACTOR	DEMAND	
KITCHEN EQUIPMENT	0	1.0	0	
CONTINUOUS	0	1.25	0	
NON-CONTINUOUS	0	1.0	0	
DEMAND	0	1.0	0	
TOTAL CONNECTED LOAD	0	KVA	0	AMPS
MIN. FEEDER / PANEL CAPACITY	0	KVA	0	AMPS
OVERALL DEMAND FACTOR	1			

EXISTING PANEL E

VOLTAGE: 208Y/120V
SYSTEM: 3PH, 4W
SOLID NEUTRAL: YES

MAIN: 225A MLO
BUS RATING: 225A
GROUND BUS: YES

INTEGRAL SPD: NO
MOUNTING: SURFACE
INTERRUPT RATING: 10,000 AIC

CKT	LOAD SERVED	BKR	PHASE	NEUT	GND	COND	DMD	L1	L2	L3	CKT	LOAD SERVED	BKR	PHASE	NEUT	GND	COND	DMD	L1	L2	L3
1	LIGHTS	20/1	#12	#12	#12	3/4"	L	-			2	REC - RM 213	20/1	#12	#12	#12	3/4"	R	-		
3	LIGHTS	20/1	#12	#12	#12	3/4"	L		-		4	REC - RM 214	20/1	#12	#12	#12	3/4"	R		-	
5	LIGHTS	20/1	#12	#12	#12	3/4"	L			-	6	REC - RM 211, 225	20/1	#12	#12	#12	3/4"	R			-
7	LIGHTS	20/1	#12	#12	#12	3/4"	L	-			8	REC - RM 210	20/1	#12	#12	#12	3/4"	R	-		
9	LIGHTS	20/1	#12	#12	#12	3/4"	L		-		10	REC - RM 208, 209	20/1	#12	#12	#12	3/4"	R		-	
11	LIGHTS	20/1	#12	#12	#12	3/4"	L			-	12	REC - RM 207	20/1	#12	#12	#12	3/4"	R			-
13	LIGHTS	20/1	#12	#12	#12	3/4"	L	-			14	REC - RM 206	20/1	#12	#12	#12	3/4"	R	-		
15	LIGHTS	20/1	#12	#12	#12	3/4"	L		-		16	REC - RM 204, 212	20/1	#12	#12	#12	3/4"	R		-	
17	LIGHTS	20/1	#12	#12	#12	3/4"	L			-	18	REC - RM 203	20/1	#12	#12	#12	3/4"	R			-
19	LIGHTS	20/1	#12	#12	#12	3/4"	L	-			20	REC - RM 215, 216	20/1	#12	#12	#12	3/4"	R	-		
21	LIGHTS	20/1	#12	#12	#12	3/4"	L		-		22	REC - RM 218	20/1	#12	#12	#12	3/4"	R		-	
23	LIGHTS	20/1	#12	#12	#12	3/4"	L			-	24	REC - RM 220, 221	20/1	#12	#12	#12	3/4"	R			-
25	LIGHTS	20/1	#12	#12	#12	3/4"	L	-			26	REC - RM 222	20/1	#12	#12	#12	3/4"	R	-		
27	SPD	30/3	#12	#12	#12	3/4"	N		-		28	REC - RM 200	20/1	#12	#12	#12	3/4"	R		-	
29	SPD	-	#12	-	-	-	N			-	30	REC - RM 229	20/1	#12	#12	#12	3/4"	R			-
31	SPD	-	#12	-	-	-	N	-			32	REC - RM 228, 230	20/1	#12	#12	#12	3/4"	R	-		
33	REC - RM 219	20/1	#12	#12	#12	3/4"	R		-		34	REC - RM 227	20/1	#12	#12	#12	3/4"	R		-	
35	REC - RM 217	20/1	#12	#12	#12	3/4"	R			-	36	REC - RM 227	20/1	#12	#12	#12	3/4"	R			-
37	EWC	20/1	#12	#12	#12	3/4"	R	-			38	REC - RM 226	20/1	#12	#12	#12	3/4"	R	-		
39	SPACE ONLY	-	-	-	-	-	-		-		40	REC - RM 224, 225	20/1	#12	#12	#12	3/4"	R		-	
41	SPARE	20/1	-	-	-	-	-			-	42	REC - RM 223	20/1	#12	#12	#12	3/4"	R			-
																		PHASE LOAD TOTALS	0	0	0

LOADS (KVA)	CONNECTED	DEMAND FACTOR	DEMAND
LIGHTING	0	1.25	0
REC TO 10 KVA	0	1.0	0
REC REMAINING	0	0.5	0
SPACE HEATING	0	0.0	0
AIR CONDITIONING	0	1.0	0
NON-SEASONAL MOTORS	0	1.0	0
LARGEST MOTOR	0	0.25	0
WATER HEATING	0	1.0	0

LOADS (KVA)	CONNECTED	DEMAND FACTOR	DEMAND	
KITCHEN EQUIPMENT	0	1.0	0	
CONTINUOUS	0	1.25	0	
NON-CONTINUOUS	0	1.0	0	
DEMAND	0	1.0	0	
TOTAL CONNECTED LOAD	0	KVA	0	AMPS
MIN. FEEDER / PANEL CAPACITY	0	KVA	0	AMPS
OVERALL DEMAND FACTOR	1			

EXISTING PANEL D

VOLTAGE: 208Y/120V
SYSTEM: 3PH, 4W
SOLID NEUTRAL: YES

MAIN: 225A MLO
BUS RATING: 225A
GROUND BUS: YES

INTEGRAL SPD: NO
MOUNTING: SURFACE
INTERRUPT RATING: 10,000 AIC

CKT	LOAD SERVED	BKR	PHASE	NEUT	GND	COND	DMD	L1	L2	L3	CKT	LOAD SERVED	BKR	PHASE	NEUT	GND	COND	DMD	L1	L2	L3
1	FANS - 1, 2, 3	20/1	#12	#12	#12	3/4"	M	1.58			2	AHU (7-1/2 TON) - ATTIC	100/3	#12	-	#12	3/4"	A	6.74		
3	FANS - 4, 5, 6	20/1	#12	#12	#12	3/4"	M		1.58		4	AHU (7-1/2 TON) - ATTIC	-	#12	-	-	-	A		6.74	
5	FANS - 7, 8, 9, 10	20/1	#12	#12	#12	3/4"	M			1.44	6	AHU (7-1/2 TON) - ATTIC	-	#12	-	-	-	A			6.74
7	REC - COMPUTER ROOM	15/1	#12	#12	#12	3/4"	R	.72			8	DAMPER TRANSFORMER	15/1	#12	#12	#12	3/4"	C	.6		
9	REC - COMPUTER ROOM	15/1	#12	#12	#12	3/4"	R		.72		10	UNKNOWN LOAD	20/1	-	-	-	-	-		-	
11	TRANE CCP CONTROL PANEL	20/1	#12	#12	#12	3/4"	N			.6	12	UNKNOWN LOAD	20/1	-	-	-	-	-			-
13	SPACE ONLY	-	-	-	-	-	-	-			14	UNKNOWN LOAD	20/1	-	-	-	-	-	-		
15	SPACE ONLY	-	-	-	-	-	-		-		16	SPACE ONLY	-	-	-	-	-	-		-	
17	SPACE ONLY	-	-	-	-	-	-			-	18	SPACE ONLY	-	-	-	-	-	-			-
19	SPACE ONLY	-	-	-	-	-	-	-			20	SPACE ONLY	-	-	-	-	-	-	-		
21	SPACE ONLY	-	-	-	-	-	-		-		22	SPACE ONLY	-	-	-	-	-	-		-	
23	SPACE ONLY	-	-	-	-	-	-			-	24	SPACE ONLY	-	-	-	-	-	-			-
25	SPACE ONLY	-	-	-	-	-	-	-			26	SPACE ONLY	-	-	-	-	-	-	-		
27	SPACE ONLY	-	-	-	-	-	-		-		28	SPACE ONLY	-	-	-	-	-	-		-	
29	SPACE ONLY	-	-	-	-	-	-			-	30	SPACE ONLY	-	-	-	-	-	-			-
31	SPACE ONLY	-	-	-	-	-	-	-			32	SPACE ONLY	-	-	-	-	-	-	-		
33	SPACE ONLY	-	-	-	-	-	-		-		34	SPACE ONLY	-	-	-	-	-	-		-	
35	SPACE ONLY	-	-	-	-	-	-			-	36	SPACE ONLY	-	-	-	-	-	-			-
37	SPACE ONLY	-	-	-	-	-	-	-			38	SPD	30/3	#12	#12	#12	3/4"	N	-		
39	SPACE ONLY	-	-	-	-	-	-		-		40	SPD	-	#12	-	-	-	N		-	
41	SPACE ONLY	-	-	-	-	-	-			-	42	SPD	-	#12	-	-	-	N			-
																		PHASE LOAD TOTALS	9.64	9.04	8.78

LOADS (KVA)	CONNECTED	DEMAND FACTOR	DEMAND
LIGHTING	0	1.25	0
REC TO 10 KVA	1.44	1.0	1.44
REC REMAINING	0	0.5	0
SPACE HEATING	0	0.0	0
AIR CONDITIONING	20.22	1.0	20.22
NON-SEASONAL MOTORS	4.6	1.0	4.6
LARGEST MOTOR	16.63	0.25	4.16
WATER HEATING	0	1.0	0

LOADS (KVA)	CONNECTED	DEMAND FACTOR	DEMAND	
KITCHEN EQUIPMENT	0	1.0	0	
CONTINUOUS	.6	1.25	.75	
NON-CONTINUOUS	.6	1.0	.6	
DEMAND	0	1.0	0	
TOTAL CONNECTED LOAD	27.5	KVA	76.3	AMPS
MIN. FEEDER / PANEL CAPACITY	31.8	KVA	88.3	AMPS
OVERALL DEMAND FACTOR	1.16			

SPECTRUM DESIGN
architects | engineers

Plaza Suite 1
10 Church Avenue, SE
Roanoke, VA 24011

540.342.6001
spectrumpc.com

LPA
LAWRENCE PERRY & ASSOCIATES
Consulting Engineers

15 E Salem Avenue SE, Suite 101
Roanoke, Virginia 24011

Ph: (540).342-1816
Fax: (540).344-3410

Comm. No.: 25114

© Lawrence Perry and Associates, Inc.

BEDFORD COUNTY SHERIFF'S OFFICE EXPANSION

SPECTRUM DESIGN PROJECT NO.: **24112**

COMMONWEALTH OF VIRGINIA
05/04/2026
WINSTON A. MATTHEWS
Lic. No. 044469
PROFESSIONAL ENGINEER

PROJ. MGR.:	CHECKED BY:	DRAWN BY:
RCH	WAM	MAS

SHEET ISSUE DATE:
05.04.2026

PROJECT PHASE:
BID DOCUMENTS

SHEET REVISIONS:

PLAN NORTH SITE NORTH

SHEET NAME:
EXISTING ELECTRICAL PANELS

SHEET NUMBER:
E601

ORIGINAL SIZE: ARCH E1 (30X42) | 5/4/2026 3:39:03 PM
C:\Users\mon\OneDrive - Lawrence Perry And Associates\Documents\23114 - Bedford Sheriff's Office - ELEC - R24_monmtz2WsdLn.rvt

EXISTING PANEL MDP

VOLTAGE: 208Y/120V | SYSTEM: 3PH, 4W | SOLID NEUTRAL: YES
MAIN: 800A MCB | BUS RATING: 800A | GROUND BUS: YES
INTEGRAL SPD: NO | MOUNTING: SURFACE | INTERRUPT RATING: 22,000 AIC

CKT	LOAD SERVED	BKR	PHASE	NEUT	GND	COND	DMD	L1	L2	L3	CKT	LOAD SERVED	BKR	PHASE	NEUT	GND	COND	DMD	L1	L2	L3
1	PANEL-A	100/3	-	-	-	-	C	-			2	PANEL-D	100/3	-	-	-	-	C	-		
3	PANEL-A	-	-	-	-	-	C		-		4	PANEL-D	-	-	-	-	-	C		-	
5	PANEL-A	-	-	-	-	-	C			-	6	PANEL-D	-	-	-	-	-	C			-
7	PANEL-B	200/3	-	-	-	-	C	-			8	PANEL-E	200/3	-	-	-	-	C	-		
9	PANEL-B	-	-	-	-	-	C		-		10	PANEL-E	-	-	-	-	-	C		-	
11	PANEL-B	-	-	-	-	-	C			-	12	PANEL-E	-	-	-	-	-	C			-
13	PANEL-C	200/3	-	-	-	-	C	-			14	SPACE ONLY	-/3	-	-	-	-	-	-		
15	PANEL-C	-	-	-	-	-	C		-		16	SPACE ONLY	-	-	-	-	-	-		-	
17	PANEL-C	-	-	-	-	-	C			-	18	SPACE ONLY	-	-	-	-	-	-			-
19	PANEL-M	600/3	-	-	-	(2) -	C	-			20	SPACE ONLY	-/3	-	-	-	-	-	-		
21	PANEL-M	-	-	-	-	-	C		-		22	SPACE ONLY	-	-	-	-	-	-		-	
23	PANEL-M	-	-	-	-	-	C			-	24	SPACE ONLY	-	-	-	-	-	-			-
25	SPACE ONLY	-/3	-	-	-	-	-	-			26	SPACE ONLY	-/3	-	-	-	-	-	-		
27	SPACE ONLY	-	-	-	-	-	-		-		28	SPACE ONLY	-	-	-	-	-	-		-	
29	SPACE ONLY	-	-	-	-	-	-			-	30	SPACE ONLY	-	-	-	-	-	-			-
31	SPACE ONLY	-/3	-	-	-	-	-	-			32	SPACE ONLY	-/3	-	-	-	-	-	-		
33	SPACE ONLY	-	-	-	-	-	-		-		34	SPACE ONLY	-	-	-	-	-	-		-	
35	SPACE ONLY	-	-	-	-	-	-			-	36	SPACE ONLY	-	-	-	-	-	-			-
37	SPACE ONLY	-/3	-	-	-	-	-	-			38	SPACE ONLY	-/3	-	-	-	-	-	-		
39	SPACE ONLY	-	-	-	-	-	-		-		40	SPACE ONLY	-	-	-	-	-	-		-	
41	SPACE ONLY	-	-	-	-	-	-			-	42	SPACE ONLY	-	-	-	-	-	-			-

PHASE LOAD TOTALS: 0 | 0 | 0

LOADS (KVA)	CONNECTED	DEMAND FACTOR	DEMAND
LIGHTING	0	1.25	0
REC TO 10 KVA	0	1.0	0
REC REMAINING	0	0.5	0
SPACE HEATING	0	0.0	0
AIR CONDITIONING	0	1.0	0
NON-SEASONAL MOTORS	0	1.0	0
LARGEST MOTOR	0	0.25	0
WATER HEATING	0	1.0	0

LOADS (KVA)	CONNECTED	DEMAND FACTOR	DEMAND	
KITCHEN EQUIPMENT	0	1.0	0	
CONTINUOUS	0	1.25	0	
NON-CONTINUOUS	0	1.0	0	
DEMAND	0	1.0	0	
TOTAL CONNECTED LOAD	0	KVA	0	AMPS
MIN. FEEDER / PANEL CAPACITY	0	KVA	0	AMPS
OVERALL DEMAND FACTOR	1			

MODIFED PANEL MDP_

VOLTAGE: 208Y/120V | SYSTEM: 3PH, 4W | SOLID NEUTRAL: YES
MAIN: 800A MCB | BUS RATING: 800A | GROUND BUS: YES
INTEGRAL SPD: NO | MOUNTING: SURFACE | INTERRUPT RATING: 22,000 AIC

CKT	LOAD SERVED	BKR	PHASE	NEUT	GND	COND	DMD	L1	L2	L3	CKT	LOAD SERVED	BKR	PHASE	NEUT	GND	COND	DMD	L1	L2	L3
1	PANEL-A	100/3	-	-	-	-	C	-			2	PANEL-D	100/3	-	-	-	-	C	-		
3	PANEL-A	-	-	-	-	-	C		-		4	PANEL-D	-	-	-	-	-	C		-	
5	PANEL-A	-	-	-	-	-	C			-	6	PANEL-D	-	-	-	-	-	C			-
7	PANEL-B	200/3	-	-	-	-	C	-			8	PANEL-E	200/3	-	-	-	-	C	-		
9	PANEL-B	-	-	-	-	-	C		-		10	PANEL-E	-	-	-	-	-	C		-	
11	PANEL-B	-	-	-	-	-	C			-	12	PANEL-E	-	-	-	-	-	C			-
13	PANEL-C	200/3	-	-	-	-	C	-			14	PANEL F	200/3	#3/0	#3/0	#6	2-1/2"	SF	10.16		
15	PANEL-C	-	-	-	-	-	C		-		16	PANEL F	-	#3/0	-	-	-	SF		9.93	
17	PANEL-C	-	-	-	-	-	C			-	18	PANEL F	-	#3/0	-	-	-	SF			6.27
19	PANEL-M	600/3	-	-	-	(2) -	C	-			20	PANEL G	200/3	#3/0	#3/0	#6	2-1/2"	SF	15.59		
21	PANEL-M	-	-	-	-	-	C		-		22	PANEL G	-	#3/0	-	-	-	SF		10.01	
23	PANEL-M	-	-	-	-	-	C			-	24	PANEL G	-	#3/0	-	-	-	SF			12.04
25	SPACE ONLY	-/3	-	-	-	-	-	-			26	PANEL J	200/3	#3/0	#3/0	#6	2-1/2"	SF	7.21		
27	SPACE ONLY	-	-	-	-	-	-		-		28	PANEL J	-	#3/0	-	-	-	SF		7.41	
29	SPACE ONLY	-	-	-	-	-	-			-	30	PANEL J	-	#3/0	-	-	-	SF			5.63
31	SPACE ONLY	-/3	-	-	-	-	-	-			32	PANEL K	200/3	#3/0	#3/0	#6	2-1/2"	SF	10.75		
33	SPACE ONLY	-	-	-	-	-	-		-		34	PANEL K	-	#3/0	-	-	-	SF		8.76	
35	SPACE ONLY	-	-	-	-	-	-			-	36	PANEL K	-	#3/0	-	-	-	SF			7.75
37	SPACE ONLY	-/3	-	-	-	-	-	-			38	SPACE ONLY	-/3	-	-	-	-	-	-		
39	SPACE ONLY	-	-	-	-	-	-		-		40	SPACE ONLY	-	-	-	-	-	-		-	
41	SPACE ONLY	-	-	-	-	-	-			-	42	SPACE ONLY	-	-	-	-	-	-			-

NOTE 1. CIRCUITS 14,16,18,20,22,24,26,28,30,32,34,36 CAN BE SUBSTITUTED FOR THIS QUANTITY AND SIZE 200A ALUMINUM CONDUCTORS & CONDUIT: (4) #250 MCM AL + (1) #4 AWG AL GND IN 2-1/2" CONDUIT.

PHASE LOAD TOTALS: 43.71 | 36.11 | 31.69

LOADS (KVA)	CONNECTED	DEMAND FACTOR	DEMAND
LIGHTING	0	1.25	0
REC TO 10 KVA	10	1.0	10
REC REMAINING	53.9	0.5	26.95
SPACE HEATING	0	0.0	0
AIR CONDITIONING	2.94	1.0	2.94
NON-SEASONAL MOTORS	1.15	1.0	1.15
LARGEST MOTOR	2.29	0.25	.57
WATER HEATING	12.96	1.0	12.96

LOADS (KVA)	CONNECTED	DEMAND FACTOR	DEMAND	
KITCHEN EQUIPMENT	16.63	0.65	10.81	
CONTINUOUS	5.75	1.25	7.19	
NON-CONTINUOUS	8.18	1.0	8.18	
DEMAND	0	1.0	0	
TOTAL CONNECTED LOAD	111.5	KVA	309.8	AMPS
MIN. FEEDER / PANEL CAPACITY	80.8	KVA	224.3	AMPS
OVERALL DEMAND FACTOR	0.72			

PANEL MDP CHANGES AND LOAD SUMMARY:

1. PANEL CHANGES:
   A. ADDITIONS:
      a. THE TOTAL ADDED LOAD FOR THIS MDP PANEL IS 224.3 AMPS / 80.8 KVA
2. PANEL LOAD SUMMARY:
   A. EXISTING METERED LOAD IS 244.8 AMPS / 88.1 KVA
   B. MODIFIED PANEL LOAD ADDED IS 224.3 AMPS / 80.8 KVA.
   C. RESULT IS A MODIFIED PANEL LOAD OF 469.1 AMPS / 168.9 KVA.
3. EXISTING MDP IS FED FROM NEW PANEL ELMDP VIA A 800 A CIRCUIT BREAKER AND 800A FEEDER. THE TOTAL LOAD ON THE MODIFIED PANEL IS 469.1 AMPS, WHICH IS WITHIN THE 800A MAIN BREAKER OF MODIFIED PANEL MDP AND WITHIN THE RATING OF THE NEW BREAKER AND FEEDER IN NEW PANEL ELMDP POWERING THE MODIFIED PANEL MDP.

EXISTING PANEL UPS#2

VOLTAGE: 120/240V | SYSTEM: 1PH, 3W | SOLID NEUTRAL: YES
MAIN: 100A MLO | BUS RATING: 100A | GROUND BUS: YES
INTEGRAL SPD: NO | MOUNTING: SURFACE | INTERRUPT RATING: 10,000 AIC

CKT	LOAD SERVED	BKR	PHASE	NEUT	GND	COND	DMD	L1	L2	CKT	LOAD SERVED	BKR	PHASE	NEUT	GND	COND	DMD	L1	L2
1	NEW EQUIP REC	20/1	#12	#12	#12	3/4"	R	-		2	DISPATCH RECEP	20/1	#12	#12	#12	3/4"	R	-	
3	NEW EQUIP REC	20/1	#12	#12	#12	3/4"	R		-	4	DISPATCH RECEP	20/1	#12	#12	#12	3/4"	R		-
5	SPACE	-	-	-	-	-	-	-		6	DISPATCH RECEP	20/1	#12	#12	#12	3/4"	R	-	
7	SPACE	-	-	-	-	-	-		-	8	DISPATCH RECEP	20/1	#12	#12	#12	3/4"	R		-
9	SPACE	-	-	-	-	-	-	-		10	DISPATCH RECEP	20/1	#12	#12	#12	3/4"	R	-	
11	SPACE	-	-	-	-	-	-		-	12	DISPATCH RECEP	20/1	#12	#12	#12	3/4"	R		-
13	SPACE	-	-	-	-	-	-	-		14	UNKNOWN LOAD	20/1	#12	#12	#12	3/4"	-	-	
15	SPACE	-	-	-	-	-	-		-	16	UNKNOWN LOAD	20/1	#12	#12	#12	3/4"	-		-
17	SPACE	-	-	-	-	-	-	-		18	SPACE	-	-	-	-	-	-	-	

PHASE LOAD TOTALS: 0 | 0

LOADS (KVA)	CONNECTED	DEMAND FACTOR	DEMAND
LIGHTING	0	1.25	0
REC TO 10 KVA	0	1.0	0
REC REMAINING	0	0.5	0
SPACE HEATING	0	0.0	0
AIR CONDITIONING	0	1.0	0
NON-SEASONAL MOTORS	0	1.0	0
LARGEST MOTOR	0	0.25	0
WATER HEATING	0	1.0	0

LOADS (KVA)	CONNECTED	DEMAND FACTOR	DEMAND	
KITCHEN EQUIPMENT	0	1.0	0	
CONTINUOUS	0	1.25	0	
NON-CONTINUOUS	0	1.0	0	
DEMAND	0	1.0	0	
TOTAL CONNECTED LOAD	0	KVA	0	AMPS
MIN. FEEDER / PANEL CAPACITY	0	KVA	0	AMPS
OVERALL DEMAND FACTOR	1			

EXISTING PANEL M

VOLTAGE: 208Y/120V | SYSTEM: 3PH, 4W | SOLID NEUTRAL: YES
MAIN: 600A MLO | BUS RATING: 600A | GROUND BUS: YES
INTEGRAL SPD: NO | MOUNTING: SURFACE | INTERRUPT RATING: 10,000 AIC

CKT	LOAD SERVED	BKR	PHASE	NEUT	GND	COND	DMD	L1	L2	L3	CKT	LOAD SERVED	BKR	PHASE	NEUT	GND	COND	DMD	L1	L2	L3
1	HP-1	40/3	#8	-	#10	3/4"	A	-			2	AHU-1	70/2	#4	-	#8	1"	A	-		
3	HP-1	-	#8	-	-	-	A		-		4	AHU-1	-	#4	-	-	-	A		-	
5	HP-1	-	#8	-	-	-	A			-	6	AHU-2	70/2	#4	-	#8	1"	A			-
7	CIRCULATION PUMP	20/1	#12	#12	#12	3/4"	A	-			8	AHU-2	-	#4	-	-	-	A	-		
9	HP-2	60/2	#6	-	#10	3/4"	A		-		10	AHU-3	70/2	#4	-	#8	1"	A		-	
11	HP-2	-	#6	-	-	-	A			-	12	AHU-3	-	#4	-	-	-	A			-
13	WATER HEATER	50/3	#8	-	#10	3/4"	A	-			14	AHU-4	60/3	#6	-	#10	1"	A	-		
15	WATER HEATER	-	#8	-	-	-	A		-		16	AHU-4	-	#6	-	-	-	A		-	
17	WATER HEATER	-	#8	-	-	-	A			-	18	AHU-4	-	#6	-	-	-	A			-
19	SPRINKLER SOLENOID	15/1	#12	#12	#12	3/4"	A	-			20	HP-3	50/2	#8	-	#10	3/4"	A	-		
21	SERVER ROOM HVAC	20/2	#12	-	#12	3/4"	A		-		22	HP-3	-	#8	-	-	-	A		-	
23	SERVER ROOM HVAC	-	#12	-	-	-	A			-	24	AIR COMPRESSOR	15/3	#12	-	#12	3/4"	A			-
25	HP-4	125/3	#1	-	#6	1-1/2"	A	-			26	AIR COMPRESSOR	-	#12	-	-	-	A	-		
27	HP-4	-	#1	-	-	-	A		-		28	AIR COMPRESSOR	-	#12	-	-	-	A		-	
29	HP-4	-	#1	-	-	-	A			-	30	HUMIDIFIER AHU-3	20/2	#12	-	#12	3/4"	A			-
31	HP-4	-	-	-	-	-	A	-			32	HUMIDIFIER AHU-3	-	#12	-	-	-	A	-		
33	HP-4	-	-	-	-	-	A		-		34	RANGE KITCHEN	40/2	#8	-	#10	3/4"	A		-	
35	HP-4	-	-	-	-	-	A			-	36	RANGE KITCHEN	-	#8	-	-	-	A			-
37	OUTDOOR UNIT CU-5A FOR ATTIC UNIT-5A	30/3	#10	-	#10	3/4"	A	-			38	OUTDOOR UNIT CU-5B FOR ATTIC UNIT-5B	30/3	#10	-	#10	3/4"	A	-		
39	OUTDOOR UNIT CU-5A FOR ATTIC UNIT-5A	-	#10	-	-	-	A		-		40	OUTDOOR UNIT CU-5B FOR ATTIC UNIT-5B	-	#10	-	-	-	A		-	
41	OUTDOOR UNIT CU-5A FOR ATTIC UNIT-5A	-	#10	-	-	-	A			-	42	OUTDOOR UNIT CU-5B FOR ATTIC UNIT-5B	-	#10	-	-	-	A			-

PHASE LOAD TOTALS: 0 | 0 | 0

LOADS (KVA)	CONNECTED	DEMAND FACTOR	DEMAND
LIGHTING	0	1.25	0
REC TO 10 KVA	0	1.0	0
REC REMAINING	0	0.5	0
SPACE HEATING	0	0.0	0
AIR CONDITIONING	0	1.0	0
NON-SEASONAL MOTORS	0	1.0	0
LARGEST MOTOR	0	0.25	0
WATER HEATING	0	1.0	0

LOADS (KVA)	CONNECTED	DEMAND FACTOR	DEMAND	
KITCHEN EQUIPMENT	0	1.0	0	
CONTINUOUS	0	1.25	0	
NON-CONTINUOUS	0	1.0	0	
DEMAND	0	1.0	0	
TOTAL CONNECTED LOAD	0	KVA	0	AMPS
MIN. FEEDER / PANEL CAPACITY	0	KVA	0	AMPS
OVERALL DEMAND FACTOR	1			

EXISTING PANEL UPS#3

VOLTAGE: 120/240V | SYSTEM: 1PH, 3W | SOLID NEUTRAL: YES
MAIN: 100A MLO | BUS RATING: 100A | GROUND BUS: YES
INTEGRAL SPD: NO | MOUNTING: SURFACE | INTERRUPT RATING: 10,000 AIC

CKT	LOAD SERVED	BKR	PHASE	NEUT	GND	COND	DMD	L1	L2	CKT	LOAD SERVED	BKR	PHASE	NEUT	GND	COND	DMD	L1	L2
1	CONSOLE #6	20/1	#12	#12	#12	3/4"	N	-		2	CONSOLE #6	20/1	#12	#12	#12	3/4"	N	-	
3	SPACE	-	-	-	-	-	-		-	4	SPACE	-	-	-	-	-	-		-
5	SPACE	-	-	-	-	-	-	-		6	SPACE	-	-	-	-	-	-	-	
7	SPACE	-	-	-	-	-	-		-	8	TWISTLOCK #1	30/2	#10	-	#10	3/4"	N		-
9	SPACE	-	-	-	-	-	-	-		10	TWISTLOCK #1	-	#10	-	-	-	N	-	
11	SPACE	-	-	-	-	-	-		-	12	SPACE	-	-	-	-	-	-		-
13	TWISTLOCK #2	30/2	#10	-	#10	3/4"	N	-		14	TWISTLOCK #2	30/2	#10	-	#10	3/4"	N	-	
15	TWISTLOCK #2	-	#10	-	-	-	N		-	16	TWISTLOCK #2	-	#10	-	-	-	N		-
17	SPACE	-	-	-	-	-	-	-		18	SPACE	-	-	-	-	-	-	-	

PHASE LOAD TOTALS: 0 | 0

LOADS (KVA)	CONNECTED	DEMAND FACTOR	DEMAND
LIGHTING	0	1.25	0
REC TO 10 KVA	0	1.0	0
REC REMAINING	0	0.5	0
SPACE HEATING	0	0.0	0
AIR CONDITIONING	0	1.0	0
NON-SEASONAL MOTORS	0	1.0	0
LARGEST MOTOR	0	0.25	0
WATER HEATING	0	1.0	0

LOADS (KVA)	CONNECTED	DEMAND FACTOR	DEMAND	
KITCHEN EQUIPMENT	0	1.0	0	
CONTINUOUS	0	1.25	0	
NON-CONTINUOUS	0	1.0	0	
DEMAND	0	1.0	0	
TOTAL CONNECTED LOAD	0	KVA	0	AMPS
MIN. FEEDER / PANEL CAPACITY	0	KVA	0	AMPS
OVERALL DEMAND FACTOR	1			

EXISTING PANEL UPS

VOLTAGE: 120/240V Delta | SYSTEM: 3PH, 4W | SOLID NEUTRAL: YES
MAIN: 225A MCB | BUS RATING: 225A | GROUND BUS: YES
INTEGRAL SPD: NO | MOUNTING: SURFACE | INTERRUPT RATING: 10,000 AIC

CKT	LOAD SERVED	BKR	PHASE	NEUT	GND	COND	DMD	L1	L2	L3	CKT	LOAD SERVED	BKR	PHASE	NEUT	GND	COND	DMD	L1	L2	L3
1	DISPATCH RECEPTACLES	20/1	#12	#12	#12	3/4"	R	-			2	DISPATCH RECEPTACLES	20/1	#12	#12	#12	3/4"	R	-		
3	DISPATCH RECEPTACLES	20/1	#12	#12	#12	3/4"	R		-		4	DISPATCH RECEPTACLES	20/1	#12	#12	#12	3/4"	R		-	
5	HIGH LEG	-	-	-	-	-	-			-	6	HIGH LEG	-	-	-	-	-	-			-
7	DISPATCH RECEPTACLES	20/1	#12	#12	#12	3/4"	R	-			8	DISPATCH RECEPTACLES	20/1	#12	#12	#12	3/4"	R	-		
9	DISPATCH RECEPTACLES	20/1	#12	#12	#12	3/4"	R		-		10	DISPATCH RECEPTACLES	20/1	#12	#12	#12	3/4"	R		-	
11	HIGH LEG	-	-	-	-	-	-			-	12	HIGH LEG	-	-	-	-	-	-			-
13	UNKNOWN LOAD	100/3	#3	#3	#8	1-1/4"	-	-			14	UPS-2 MAIN	60/2	#6	#6	#10	1"	C	-		
15	UNKNOWN LOAD	-	#3	-	-	-	-		-		16	UPS-2 MAIN	-	#6	-	-	-	C		-	
17	UNKNOWN LOAD	-	#3	-	-	-	-			-	18	HIGH LEG	-	-	-	-	-	-			-
19	RECEPTACLES - ROOM 112	20/1	#12	#12	#12	3/4"	R	-			20	RECEPTACLES - ROOM 112	20/1	#12	#12	#12	3/4"	R	-		
21	UNKNOWN LOAD	20/1	#12	#12	#12	3/4"	-		-		22	FILE SERVER RECEPTACLE	20/1	#12	#12	#12	3/4"	R		-	
23	HIGH LEG	-	-	-	-	-	-			-	24	HIGH LEG	-	-	-	-	-	-			-
25	UNKNOWN LOAD	20/1	#12	#12	#12	3/4"	-	-			26	26 & 28 SERVER ROOM	20/1	#12	#12	#12	3/4"	N	-		
27	26 & 28 SERVER ROOM	-	-	-	-	-	N		-		28	UNKNOWN LOAD	20/1	#12	#12	#12	3/4"	-		-	
29	HIGH LEG	-	-	-	-	-	-			-	30	HIGH LEG	-	-	-	-	-	-			-
31	UNKNOWN LOAD	20/1	#12	#12	#12	3/4"	-	-			32	UNKNOWN LOAD	20/1	#12	#12	#12	3/4"	-	-		
33	UNKNOWN LOAD	20/1	#12	#12	#12	3/4"	-		-		34	UNKNOWN LOAD	20/1	#12	#12	#12	3/4"	-		-	
35	HIGH LEG	-	-	-	-	-	-			-	36	HIGH LEG	-	-	-	-	-	-			-
37	UNKNOWN LOAD	20/1	#12	#12	#12	3/4"	-	-			38	UPS-3 MAIN (UNKNOWN)	100/2	#3	#3	#8	1-1/4"	-	-		
39	UNKNOWN LOAD	20/1	#12	#12	#12	3/4"	-		-		40	UPS-3 MAIN (UNKNOWN)	-	#3	-	-	-	-		-	
41	HIGH LEG	-	-	-	-	-	-			-	42	HIGH LEG	-	-	-	-	-	-			-

PHASE LOAD TOTALS: 0 | 0 | 0

LOADS (KVA)	CONNECTED	DEMAND FACTOR	DEMAND
LIGHTING	0	1.25	0
REC TO 10 KVA	0	1.0	0
REC REMAINING	0	0.5	0
SPACE HEATING	0	0.0	0
AIR CONDITIONING	0	1.0	0
NON-SEASONAL MOTORS	0	1.0	0
LARGEST MOTOR	0	0.25	0
WATER HEATING	0	1.0	0

LOADS (KVA)	CONNECTED	DEMAND FACTOR	DEMAND	
KITCHEN EQUIPMENT	0	1.0	0	
CONTINUOUS	0	1.25	0	
NON-CONTINUOUS	0	1.0	0	
DEMAND	0	1.0	0	
TOTAL CONNECTED LOAD	0	KVA	0	AMPS
MIN. FEEDER / PANEL CAPACITY	0	KVA	0	AMPS
OVERALL DEMAND FACTOR	1			

SPECTRUM DESIGN
architects | engineers

Plaza Suite 1
10 Church Avenue, SE
Roanoke, VA 24011
540.342.6001
spectrumpc.com

LPA
LAWRENCE PERRY & ASSOCIATES
Consulting Engineers
15 E Salem Avenue SE, Suite 101
Roanoke, Virginia 24011
Ph: (540) 342-1816
Fax: (540) 344-3410
Comm. No.: 25114

© Lawrence Perry and Associates, Inc.

BEDFORD COUNTY SHERIFF'S OFFICE EXPANSION

SPECTRUM DESIGN PROJECT NO.: **24112**

COMMONWEALTH OF VIRGINIA
05/04/2026
WINSTON A. MATTHEWS
Lic. No. 044469
PROFESSIONAL ENGINEER

PROJ. MGR.: **RCH** | CHECKED BY: **WAM** | DRAWN BY: **MAS**

SHEET ISSUE DATE:
05.04.2026

PROJECT PHASE:
BID DOCUMENTS

SHEET REVISIONS:

PLAN NORTH | SITE NORTH

SHEET NAME:
EXISTING ELECTRICAL PANELS

SHEET NUMBER:
E602

ORIGINAL SIZE : ARCH E1 (30X42) | 5/4/2026 3:39:03 PM
C:\Users\mas\OneDrive - Lawrence Perry And Associates\Documents\25114 - Bedford Sheriff's Office - ELEC - R26_msmithQTWNS.rvt

NEW PANEL F

VOLTAGE: 208Y/120V
SYSTEM: 3PH, 4W
SOLID NEUTRAL: YES

MAIN: 200A MLO
BUS RATING: 225A
GROUND BUS: YES

INTEGRAL SPD: YES
MOUNTING: SURFACE
INTERRUPT RATING: 10,000 AIC

CKT	LOAD SERVED	BKR	PHASE	NEUT	GND	COND	DMD	L1	L2	L3	CKT	LOAD SERVED	BKR	PHASE	NEUT	GND	COND	DMD	L1	L2	L3
1	REC STORAGE 130	20/1	#12	#12	#12	1/2"	R	.36			2	REC FLOOR BOX MULTIPURPOSE / EOC 121A	20/1	#12	#12	#12	1/2"	R	.36		
3	REC STORAGE 130	20/1	#12	#12	#12	1/2"	R		.36		4	REC FLOOR BOX MULTIPURPOSE / EOC 121A	20/1	#12	#12	#12	1/2"	R		.36	
5	REC STORAGE 130	20/1	#12	#12	#12	1/2"	R			.36	6	REC FLOOR BOX MULTIPURPOSE / EOC 121A	20/1	#12	#12	#12	1/2"	R			.36
7	REC STORAGE 130	20/1	#12	#12	#12	1/2"	R	.36			8	REC FLOOR BOX MULTIPURPOSE / EOC 121A	20/1	#12	#12	#12	1/2"	R	.36		
9	REC STORAGE 130	20/1	#12	#12	#12	1/2"	R		.36		10	REC FLOOR BOX MULTIPURPOSE / EOC 121A	20/1	#12	#12	#12	1/2"	R		.36	
11	REC MULTIPURPOSE / EOC 121A	20/1	#12	#12	#12	1/2"	R			.72	12	REC FLOOR BOX MULTIPURPOSE / EOC 121A	20/1	#12	#12	#12	1/2"	R			.36
13	REC MULTIPURPOSE / EOC 121A	20/1	#12	#12	#12	1/2"	R	.72			14	REC FLOOR BOX MULTIPURPOSE / EOC 121A	20/1	#12	#12	#12	1/2"	R	.36		
15	REC MULTIPURPOSE / EOC 121A	20/1	#12	#12	#12	1/2"	R		.72		16	REC FLOOR BOX MULTIPURPOSE / EOC 121A	20/1	#12	#12	#12	1/2"	R		.36	
17	REC MULTIPURPOSE / EOC 121A	20/1	#12	#12	#12	1/2"	R			.72	18	ACCESS CONTROL PANEL 1	20/1	#12	#12	#12	1/2"	C			.6
19	REC MULTIPURPOSE / EOC 121A	20/1	#12	#12	#12	1/2"	R	.72			20	ACCESS CONTROL PANEL 2	20/1	#12	#12	#12	1/2"	C	.6		
21	REC MULTIPURPOSE / EOC 121A	20/1	#12	#12	#12	1/2"	R		.72		22	REC IT M103	20/1	#12	#12	#12	1/2"	R		.36	
23	REC M. TLT T104, W. TLT T105	20/1	#12	#12	#12	1/2"	R			.36	24	REC IT M103	20/1	#12	#12	#12	1/2"	R			.36
25	ELECTRIC WATER COOLER CORRIDOR C103	20/1	#12	#12	#12	1/2"	N	1			26	FLOOR RACK #1 REC IT M103	20/1	#12	#12	#12	1/2"	C	1.9		
27	REC ECC BREAK ROOM 111	20/1	#12	#12	#12	1/2"	R		.54		28	FLOOR RACK #2 REC IT M103	20/1	#12	#12	#12	1/2"	C		1.9	
29	REC ECC BREAK ROOM 111	20/1	#12	#12	#12	1/2"	R			.36	30	REC IT M103	20/1	#12	#12	#12	1/2"	R			.36
31	MICROWAVE ECC BREAK ROOM 111	20/1	#12	#12	#12	1/2"	K	1.5			32	REC OPEN OFFICE 110A	20/1	#12	#12	#12	1/2"	R	.54		
33	REFRIG ECC BREAK ROOM 111	20/1	#12	#12	#12	1/2"	K		1.2		34	REC OPEN OFFICE 110A	20/1	#12	#12	#12	1/2"	R		.54	
35	REC LACTATION 108, CORRIDOR 110	20/1	#12	#12	#12	1/2"	R			.36	36	REC OPEN OFFICE 110B	20/1	#12	#12	#12	1/2"	R			.36
37	REC LACTATION 108	20/1	#12	#12	#12	1/2"	R	.36			38	REC OPEN OFFICE 110B	20/1	#12	#12	#12	1/2"	R	.54		
39	REFRIG LACTATION 108	20/1	#12	#12	#12	1/2"	K		1.2		40	REC OFFICE 110C	20/1	#12	#12	#12	1/2"	R		.72	
41	LIGHTING CONTACTOR LC2 NEW MECH M102	20/1	#12	#12	#12	1/2"	C			.24	42	REC OPEN OFFICES 110A, 110B	20/1	#12	#12	#12	1/2"	R			.72
43	STORAGE 131	20/1	#12	#12	#12	1/2"	R	.36			44	DOOR POWER SUPPLIES 122.1, 121C, 131	20/1	#12	#12	#12	1/2"	C	.09		
45	SPARE	20/1	-	-	-	-	-		-		46	WC-1, WC-2, UR-1 TLT T104, T105	20/1	#12	#12	#12	1/2"	N		.2	
47	SPARE	20/1	-	-	-	-	-			-	48	SPARE	20/1	-	-	-	-	-			-
49	SPARE	20/1	-	-	-	-	-	-			50	SPARE	20/1	-	-	-	-	-	-		
51	SPARE	20/1	-	-	-	-	-		-		52	SPACE	-	-	-	-	-	-		-	
53	SPACE	-	-	-	-	-	-			-	54	SPACE	-	-	-	-	-	-			-
55	SPD	30/3	#10	#10	#10	3/4"	N	.03			56	SPD - SPACE	-/3	-	-	-	-	-	-		
57	SPD	-	#10	-	-	-	N		.03		58	SPD - SPACE	-	-	-	-	-	-		-	
59	SPD	-	#10	-	-	-	N			.03	60	SPD - SPACE	-	-	-	-	-	-			-

NOTE 1. PROVIDE GFCI RATED BREAKER(S) FOR CIRCUIT(S) 25, 46

PHASE LOAD TOTALS 10.16 9.93 6.27

LOADS (KVA)	CONNECTED	DEMAND FACTOR	DEMAND
LIGHTING	0	1.25	0
REC TO 10 KVA	10	1.0	10
REC REMAINING	5.84	0.5	2.92
SPACE HEATING	0	0.0	0
AIR CONDITIONING	0	1.0	0
NON-SEASONAL MOTORS	0	1.0	0
LARGEST MOTOR	0	0.25	0
WATER HEATING	0	1.0	0

LOADS (KVA)	CONNECTED	DEMAND FACTOR	DEMAND	
KITCHEN EQUIPMENT	3.9	0.9	3.51	
CONTINUOUS	5.33	1.25	6.66	
NON-CONTINUOUS	1.29	1.0	1.29	
DEMAND	0	1.0	0	
TOTAL CONNECTED LOAD	26.4	KVA	73.2	AMPS
MIN. FEEDER / PANEL CAPACITY	24.4	KVA	67.7	AMPS
OVERALL DEMAND FACTOR	0.92			

NEW PANEL G

VOLTAGE: 208Y/120V
SYSTEM: 3PH, 4W
SOLID NEUTRAL: YES

MAIN: 200A MLO
BUS RATING: 225A
GROUND BUS: YES

INTEGRAL SPD: YES
MOUNTING: SURFACE
INTERRUPT RATING: 10,000 AIC

CKT	LOAD SERVED	BKR	PHASE	NEUT	GND	COND	DMD	L1	L2	L3	CKT	LOAD SERVED	BKR	PHASE	NEUT	GND	COND	DMD	L1	L2	L3
1	REC OFFICE 129	20/1	#12	#12	#12	1/2"	R	.72			2	WATER HEATER (WHR-2) - BREAK ROOM 120	20/1	#12	#12	#12	1/2"	W	1.44		
3	REC OFFICE 128	20/1	#12	#12	#12	1/2"	R		.72		4	WATER HEATER (WHR-1) - WOMEN TOILET T105	20/1	#12	#12	#12	1/2"	W		1.44	
5	REC OFFICE 127	20/1	#12	#12	#12	1/2"	R			.72	6	WATER HEATER (WHR-1) - MEN TOILET T104	20/1	#12	#12	#12	1/2"	W			1.44
7	REC OFFICE 126	20/1	#12	#12	#12	1/2"	R	.72			8	WATER HEATER (WHR-2) - LACTATION 108	20/1	#12	#12	#12	1/2"	W	1.44		
9	REC OFFICE 125	20/1	#12	#12	#12	1/2"	R		.72		10	WATER HEATER (WHR-2) - BREAK ROOM 111	20/1	#12	#12	#12	1/2"	W		1.44	
11	REC OFFICE 124	20/1	#12	#12	#12	1/2"	R			.72	12	REC FLOOR BOX OPEN OFFICE 122	20/1	#12	#12	#12	1/2"	R			.18
13	REC OFFICE 123	20/1	#12	#12	#12	1/2"	R	.72			14	REC FLOOR BOX OPEN OFFICE 122	20/1	#12	#12	#12	1/2"	R	.18		
15	REC OPEN OFFICE 122, STAIR S102	20/1	#12	#12	#12	1/2"	R		.72		16	REC FLOOR BOX OPEN OFFICE 122	20/1	#12	#12	#12	1/2"	R		.18	
17	REC OPEN OFFICE 122	20/1	#12	#12	#12	1/2"	R			.54	18	REC FLOOR BOX OPEN OFFICE 122	20/1	#12	#12	#12	1/2"	R			.18
19	REC OPEN OFFICE 122	20/1	#12	#12	#12	1/2"	R	.72			20	REC FLOOR BOX OPEN OFFICE 122	20/1	#12	#12	#12	1/2"	R	.18		
21	REC CORRIDOR C103	20/1	#12	#12	#12	1/2"	R		.72		22	REC FLOOR BOX OPEN OFFICE 122	20/1	#12	#12	#12	1/2"	R		.18	
23	REC BREAK ROOM / KITCHEN 120	20/1	#12	#12	#12	1/2"	R			.36	24	NEW DIESEL GENERATOR LOADCENTER	60/2	#1	-	#4	1-1/2"	N			1.96
25	REC BREAK ROOM / KITCHEN 120	20/1	#12	#12	#12	1/2"	R	.54			26	NEW DIESEL GENERATOR LOADCENTER	-	#1	-	-	-	N	1.96		
27	REC BREAK ROOM / KITCHEN 120	20/1	#12	#12	#12	1/2"	R		.54		28	SPARE	20/1	-	-	-	-	-		-	
29	REC BREAK ROOM / KITCHEN 120	20/1	#12	#12	#12	1/2"	R			.36	30	SPARE	20/1	-	-	-	-	-			-
31	REC BREAK ROOM / KITCHEN 120	20/1	#12	#12	#12	1/2"	R	.36			32	SPARE	20/1	-	-	-	-	-	-		
33	REC REFRIG BREAK ROOM / KITCHEN 120	20/1	#12	#12	#12	1/2"	K		1.01		34	SPARE	20/1	-	-	-	-	-		-	
35	REC ICE MAKER BREAK ROOM / KITCHEN 120	20/1	#12	#12	#12	1/2"	N			.5	36	MOD - MECH M102	20/1	#12	#12	#12	1/2"	A			.24
37	DISHWASHER BREAK ROOM / KITCHEN 120	20/1	#12	#12	#12	1/2"	K	.72			38	MICROWAVE BREAK ROOM / KITCHEN 120	20/1	#12	#12	#12	1/2"	K	1.5		
39	REC NEW CORRIDOR C102	20/1	#12	#12	#12	1/2"	R		.18		40	MICROWAVE BREAK ROOM / KITCHEN 120	20/1	#12	#12	#12	1/2"	K		1.5	
41	REC ELEVATOR PIT	20/1	#12	#12	#12	1/2"	R			.18	42	NEMA 14-50R BREAK ROOM / KITCHEN 120	50/2	#8	#8	#10	3/4"	K			4
43	SPARE	20/1	-	-	-	-	-	-			44	NEMA 14-50R BREAK ROOM / KITCHEN 120	-	#8	-	-	-	K	4		
45	SPARE	20/1	-	-	-	-	-		-		46	REC EXTERIOR	20/1	#12	#12	#12	1/2"	R		.54	
47	SPARE	20/1	-	-	-	-	-			-	48	REC NEW MECH M102	20/1	#12	#12	#12	1/2"	R			.54
49	SPARE	20/1	-	-	-	-	-	-			50	REC NEW MECH M102	20/1	#12	#12	#12	1/2"	R	.36		
51	SPARE	20/1	-	-	-	-	-		-		52	DOOR POWER SUPPLIES S102.1, S102.2, 122.2	20/1	#12	#12	#12	1/2"	C		.09	
53	SPARE	20/1	-	-	-	-	-			-	54	DOOR POWER SUPPLIES C103, C102, M103	20/1	#12	#12	#12	1/2"	C			.09
55	SPD	30/3	#10	#10	#10	3/4"	N	.03			56	SPD - SPACE	-/3	-	-	-	-	-	-		
57	SPD	-	#10	-	-	-	N		.03		58	SPD - SPACE	-	-	-	-	-	-		-	
59	SPD	-	#10	-	-	-	N			.03	60	SPD - SPACE	-	-	-	-	-	-			-

NOTE 1. PROVIDE GFCI RATED BREAKER(S) FOR CIRCUIT(S) 2, 4, 6, 8, 10

PHASE LOAD TOTALS 15.59 10.01 12.04

LOADS (KVA)	CONNECTED	DEMAND FACTOR	DEMAND
LIGHTING	0	1.25	0
REC TO 10 KVA	10	1.0	10
REC REMAINING	2.78	0.5	1.39
SPACE HEATING	0	0.0	0
AIR CONDITIONING	.24	1.0	.24
NON-SEASONAL MOTORS	0	1.0	0
LARGEST MOTOR	.24	0.25	.06
WATER HEATING	7.2	1.0	7.2

LOADS (KVA)	CONNECTED	DEMAND FACTOR	DEMAND	
KITCHEN EQUIPMENT	12.73	0.7	8.91	
CONTINUOUS	.18	1.25	.23	
NON-CONTINUOUS	4.51	1.0	4.51	
DEMAND	0	1.0	0	
TOTAL CONNECTED LOAD	37.6	KVA	104.6	AMPS
MIN. FEEDER / PANEL CAPACITY	32.5	KVA	90.4	AMPS
OVERALL DEMAND FACTOR	0.86			

NEW PANEL H1

VOLTAGE: 480Y/277V
SYSTEM: 3PH, 4W
SOLID NEUTRAL: YES

MAIN: 200A MLO
BUS RATING: 225A
GROUND BUS: YES

INTEGRAL SPD: YES
MOUNTING: SURFACE
INTERRUPT RATING: 35,000 AIC

CKT	LOAD SERVED	BKR	PHASE	NEUT	GND	COND	DMD	L1	L2	L3	CKT	LOAD SERVED	BKR	PHASE	NEUT	GND	COND	DMD	L1	L2	L3
1	VAV-101 - BREAK ROOM 120	15/1	#12	#12	#12	1/2"	H	3			2	VAV-102 - BREAK ROOM 120	15/3	#12	-	#12	1/2"	H	2		
3	VAV-106 - STORAGE 131	15/1	#12	#12	#12	1/2"	H		2.5		4	VAV-102 - BREAK ROOM 120	-	#12	-	-	-	H		2	
5	LTG RM M102, M103, C103, 120, 123, 124	20/1	#12	#12	#12	1/2"	L			.87	6	VAV-102 - BREAK ROOM 120	-	#12	-	-	-	H			2
7	LTG RM 122, 125, 126, 127, 128, 129	20/1	#12	#12	#12	1/2"	L	.98			8	VAV-103 - OPEN OFFICE 122	15/3	#12	-	#12	1/2"	H	1.33		
9	LTG T104, T105, 121A, 121B, 130, 131	20/1	#12	#12	#12	1/2"	L		1.23		10	VAV-103 - OPEN OFFICE 122	-	#12	-	-	-	H		1.33	
11	LTG ELEVATOR PIT, ELEV S137	20/1	#12	#12	#12	1/2"	L			.15	12	VAV-103 - OPEN OFFICE 122	-	#12	-	-	-	H			1.33
13	SPARE	20/1	-	-	-	-	-	-			14	VAV-104 - OPEN OFFICE 122	15/3	#12	-	#12	1/2"	H	1.83		
15	SPARE	20/1	-	-	-	-	-		-		16	VAV-104 - OPEN OFFICE 122	-	#12	-	-	-	H		1.83	
17	SPARE	20/1	-	-	-	-	-			-	18	VAV-104 - OPEN OFFICE 122	-	#12	-	-	-	H			1.83
19	LTG RM C102, 107, 108, 110, 110A - 110C, 111	20/1	#12	#12	#12	1/2"	L	.73			20	VAV-105 - OPEN OFFICE 122	15/3	#12	-	#12	1/2"	H	1.83		
21	SPARE	20/1	-	-	-	-	-		-		22	VAV-105 - OPEN OFFICE 122	-	#12	-	-	-	H		1.83	
23	SPARE	20/1	-	-	-	-	-			-	24	VAV-105 - OPEN OFFICE 122	-	#12	-	-	-	H			1.83
25	SPARE	20/1	-	-	-	-	-	-			26	VAV-107 - MULTIPURPOSE 121A	15/3	#12	-	#12	1/2"	H	1.33		
27	SPARE	20/1	-	-	-	-	-		-		28	VAV-107 - MULTIPURPOSE 121A	-	#12	-	-	-	H		1.33	
29	SPARE	20/1	-	-	-	-	-			-	30	VAV-107 - MULTIPURPOSE 121A	-	#12	-	-	-	H			1.33
31	SPACE ONLY	-	-	-	-	-	-	-			32	VAV-108 - MULTIPURPOSE 121A	15/3	#12	-	#12	1/2"	H	1.33		
33	SPACE ONLY	-	-	-	-	-	-		-		34	VAV-108 - MULTIPURPOSE 121A	-	#12	-	-	-	H		1.33	
35	SPACE ONLY	-	-	-	-	-	-			-	36	VAV-108 - MULTIPURPOSE 121A	-	#12	-	-	-	H			1.33
37	SPACE ONLY	-	-	-	-	-	-	-			38	EUH-1 - MECH M102	15/3	#12	-	#12	1/2"	H	1.1		
39	SPACE ONLY	-	-	-	-	-	-		-		40	EUH-1 - MECH M102	-	#12	-	-	-	H		1.1	
41	SPACE ONLY	-	-	-	-	-	-			-	42	EUH-1 - MECH M102	-	#12	-	-	-	H			1.1
43	SPACE ONLY	-	-	-	-	-	-	-			44	ECH-1 - STAIR S102	15/3	#12	-	#12	1/2"	H	.67		
45	SPACE ONLY	-	-	-	-	-	-		-		46	ECH-1 - STAIR S102	-	#12	-	-	-	H		.67	
47	SPACE ONLY	-	-	-	-	-	-			-	48	ECH-1 - STAIR S102	-	#12	-	-	-	H			.67
49	SPACE ONLY	-	-	-	-	-	-	-			50	AHU-1 - MECH M102	15/3	#12	-	#12	1/2"	H	1.1		
51	SPACE ONLY	-	-	-	-	-	-		-		52	AHU-1 - MECH M102	-	#12	-	-	-	H		1.1	
53	SPACE ONLY	-	-	-	-	-	-			-	54	AHU-1 - MECH M102	-	#12	-	-	-	H			1.1
55	SPACE ONLY	-	-	-	-	-	-	-			56	SPACE ONLY	-	-	-	-	-	-	-		
57	SPACE ONLY	-	-	-	-	-	-		-		58	SPACE ONLY	-	-	-	-	-	-		-	
59	SPACE ONLY	-	-	-	-	-	-			-	60	SPACE ONLY	-	-	-	-	-	-			-
61	SPACE ONLY	-	-	-	-	-	-	-			62	SPACE ONLY	-	-	-	-	-	-	-		
63	SPACE ONLY	-	-	-	-	-	-		-		64	SPACE ONLY	-	-	-	-	-	-		-	
65	SPACE ONLY	-	-	-	-	-	-			-	66	SPACE ONLY	-	-	-	-	-	-			-
67	SPACE ONLY	-	-	-	-	-	-	-			68	SPACE ONLY	-	-	-	-	-	-	-		
69	SPACE ONLY	-	-	-	-	-	-		-		70	SPACE ONLY	-	-	-	-	-	-		-	
71	SPACE ONLY	-	-	-	-	-	-			-	72	SPACE ONLY	-	-	-	-	-	-			-
73	SPD	20/3	#12	#12	#12	3/4"	N	.03			74	SPD - SPACE	-/3	-	-	-	-	-	-		
75	SPD	-	#12	-	-	-	N		.03		76	SPD - SPACE	-	-	-	-	-	-		-	
77	SPD	-	#12	-	-	-	N			.03	78	SPD - SPACE	-	-	-	-	-	-			-

PHASE LOAD TOTALS 17.26 16.28 13.57

LOADS (KVA)	CONNECTED	DEMAND FACTOR	DEMAND
LIGHTING	3.96	1.25	4.95
REC TO 10 KVA	0	1.0	0
REC REMAINING	0	0.5	0
SPACE HEATING	43.06	1.0	43.06
AIR CONDITIONING	0	0.0	0
NON-SEASONAL MOTORS	0	1.0	0
LARGEST MOTOR	0	0.25	0
WATER HEATING	0	1.0	0

LOADS (KVA)	CONNECTED	DEMAND FACTOR	DEMAND	
KITCHEN EQUIPMENT	0	1.0	0	
CONTINUOUS	0	1.25	0	
NON-CONTINUOUS	.09	1.0	.09	
DEMAND	0	1.0	0	
TOTAL CONNECTED LOAD	47.1	KVA	56.7	AMPS
MIN. FEEDER / PANEL CAPACITY	48.1	KVA	57.9	AMPS
OVERALL DEMAND FACTOR	1.02			

NEW PANEL H2

VOLTAGE: 480Y/277V
SYSTEM: 3PH, 4W
SOLID NEUTRAL: YES

MAIN: 200A MLO
BUS RATING: 225A
GROUND BUS: YES

INTEGRAL SPD: YES
MOUNTING: FLUSH
INTERRUPT RATING: 25,000 AIC

CKT	LOAD SERVED	BKR	PHASE	NEUT	GND	COND	DMD	L1	L2	L3	CKT	LOAD SERVED	BKR	PHASE	NEUT	GND	COND	DMD	L1	L2	L3
1	VAV-201 - OPEN OFFICE 230	20/1	#12	#12	#12	1/2"	H	3.5			2	VAV-202 - OPEN OFFICE 230	15/3	#12	-	#12	1/2"	H	2.33		
3	VAV-206 - OPEN OFFICE 240	15/1	#12	#12	#12	1/2"	H		3		4	VAV-202 - OPEN OFFICE 230	-	#12	-	-	-	H		2.33	
5	VAV-207 - CORRIDOR C205	20/1	#12	#12	#12	1/2"	H			3.5	6	VAV-202 - OPEN OFFICE 230	-	#12	-	-	-	H			2.33
7	VAV-208 - CORRIDOR C205	15/1	#12	#12	#12	1/2"	H	2.5			8	VAV-203 - OPEN OFFICE 230	15/3	#12	-	#12	1/2"	H	1.33		
9	VAV-210 - OPEN OFFICE 230	20/1	#12	#12	#12	1/2"	H		3.5		10	VAV-203 - OPEN OFFICE 230	-	#12	-	-	-	H		1.33	
11	VAV-211 - OFFICE 235	15/1	#12	#12	#12	1/2"	H			2	12	VAV-203 - OPEN OFFICE 230	-	#12	-	-	-	H			1.33
13	VAV-212 - CORRIDOR C202	20/1	#12	#12	#12	1/2"	H	4			14	VAV-204 - OPEN OFFICE 240	15/3	#12	-	#12	1/2"	H	2.67		
15	EH-1 - SECURE VESTIBULE V202	15/1	#12	#12	#12	1/2"	H		2		16	VAV-204 - OPEN OFFICE 240	-	#12	-	-	-	H		2.67	
17	EWH-1 - PUBLIC TOILET T206	15/1	#12	#12	#12	1/2"	H			2	18	VAV-204 - OPEN OFFICE 240	-	#12	-	-	-	H			2.67
19	LTG RM 230, 231, 233	20/1	#12	#12	#12	1/2"	L	.83			20	VAV-205 - OPEN OFFICE 240	15/3	#12	-	#12	1/2"	H	1.33		
21	LTG OPEN OFFICE 240, OFFICE 243	20/1	#12	#12	#12	1/2"	L		.85		22	VAV-205 - OPEN OFFICE 240	-	#12	-	-	-	H		1.33	
23	LTG RM C205, C206, T206, 242, 245-248	20/1	#12	#12	#12	1/2"	L			.49	24	VAV-205 - OPEN OFFICE 240	-	#12	-	-	-	H			1.33
25	LTG RM C202, T204, T205, 234 - 238, 241, 244	20/1	#12	#12	#12	1/2"	L	.98			26	VAV-209 - OPEN OFFICE 230	15/3	#12	-	#12	1/2"	H	2.67		
27	LTG NEW STAIR S102, S202	20/1	#12	#12	#12	1/2"	L		.23		28	VAV-209 - OPEN OFFICE 230	-	#12	-	-	-	H		2.67	
29	LTG RM 205, 210, 212 - 217, 220, 223, C202-05	20/1	#12	#12	#12	1/2"	L			1.02	30	VAV-209 - OPEN OFFICE 230	-	#12	-	-	-	H			2.67
31	FLAG POLE LIGHTS EXTERIOR	20/1	#12	#12	#12	1/2"	L	.26			32	SPARE	20/1	-	-	-	-	-	-		
33	SPARE	20/1	-	-	-	-	-		-		34	SPARE	20/1	-	-	-	-	-		-	
35	SPARE	20/1	-	-	-	-	-			-	36	SPARE	20/1	-	-	-	-	-			-
37	SPARE	20/1	-	-	-	-	-	-			38	SPARE	20/1	-	-	-	-	-	-		
39	SPARE	20/1	-	-	-	-	-		-		40	SPARE	20/1	-	-	-	-	-		-	
41	SPARE	20/1	-	-	-	-	-			-	42	SPACE ONLY	-	-	-	-	-	-			-
43	SPACE ONLY	-	-	-	-	-	-	-			44	SPACE ONLY	-	-	-	-	-	-	-		
45	SPACE ONLY	-	-	-	-	-	-		-		46	SPACE ONLY	-	-	-	-	-	-		-	
47	SPACE ONLY	-	-	-	-	-	-			-	48	SPACE ONLY	-	-	-	-	-	-			-
49	SPACE ONLY	-	-	-	-	-	-	-			50	SPACE ONLY	-	-	-	-	-	-	-		
51	SPACE ONLY	-	-	-	-	-	-		-		52	SPACE ONLY	-	-	-	-	-	-		-	
53	SPACE ONLY	-	-	-	-	-	-			-	54	SPACE ONLY	-	-	-	-	-	-			-
55	SPD	20/3	#12	#12	#12	3/4"	N	.03			56	SPD - SPACE	-/3	-	-	-	-	-	-		
57	SPD	-	#12	-	-	-	N		.03		58	SPD - SPACE	-	-	-	-	-	-		-	
59	SPD	-	#12	-	-	-	N			.03	60	SPD - SPACE	-	-	-	-	-	-			-

PHASE LOAD TOTALS 22.43 19.94 19.37

LOADS (KVA)	CONNECTED	DEMAND FACTOR	DEMAND
LIGHTING	4.66	1.25	5.83
REC TO 10 KVA	0	1.0	0
REC REMAINING	0	0.5	0
SPACE HEATING	56.99	1.0	56.99
AIR CONDITIONING	0	0.0	0
NON-SEASONAL MOTORS	0	1.0	0
LARGEST MOTOR	0	0.25	0
WATER HEATING	0	1.0	0

LOADS (KVA)	CONNECTED	DEMAND FACTOR	DEMAND	
KITCHEN EQUIPMENT	0	1.0	0	
CONTINUOUS	0	1.25	0	
NON-CONTINUOUS	.09	1.0	.09	
DEMAND	0	1.0	0	
TOTAL CONNECTED LOAD	61.7	KVA	74.3	AMPS
MIN. FEEDER / PANEL CAPACITY	62.9	KVA	75.7	AMPS
OVERALL DEMAND FACTOR	1.02			

SPECTRUM DESIGN
architects | engineers

Plaza Suite 1
10 Church Avenue, SE
Roanoke, VA 24011

540.342.6001
spectrumpc.com

LPA
LAWRENCE PERRY & ASSOCIATES
Consulting Engineers

15 E Salem Avenue SE, Suite 101
Roanoke, Virginia 24011

Ph: (540).342-1816
Fax: (540).344-3410

Comm. No.: 25114

© Lawrence Perry and Associates, Inc.

BEDFORD COUNTY SHERIFF'S OFFICE EXPANSION

SPECTRUM DESIGN PROJECT NO.: **24112**

COMMONWEALTH OF VIRGINIA
05/04/2026
WINSTON A. MATTHEWS
Lic. No. 044469
PROFESSIONAL ENGINEER

PROJ. MGR.: **RCH**
CHECKED BY: **WAM**
DRAWN BY: **MAS**

SHEET ISSUE DATE:
05.04.2026

PROJECT PHASE:
BID DOCUMENTS

SHEET REVISIONS:

PLAN NORTH
SITE NORTH

SHEET NAME:
NEW ELECTRICAL PANELS

SHEET NUMBER:
E603

ORIGINAL SIZE: ARCH E1 (30X42) | 5/4/2026 3:39:03 PM
C:\Users\mcci\OneDrive - Lawrence Perry And Associates\Documents\25114 - Bedford Sheriff's Office - ELEC - R25_mcciritter2WKD.rvt

NEW PANEL HDP

VOLTAGE: 480Y/277V
SYSTEM: 3PH, 4W
SOLID NEUTRAL: YES

MAIN: 600A MLO
BUS RATING: 600A
GROUND BUS: YES

INTEGRAL SPD: YES
MOUNTING: SURFACE
INTERRUPT RATING: 35,000 AIC

CKT	LOAD SERVED	BKR	PHASE	NEUT	GND	COND	DMD	L1	L2	L3	CKT	LOAD SERVED	BKR	PHASE	NEUT	GND	COND	DMD	L1	L2	L3
1	RTU-1 - ON ROOF	80/3	#4	-	#8	1-1/4"	H	19.83			2	CU-1 - EXTERIOR	40/3	#8	-	#10	3/4"	A	7.81		
3	RTU-1 - ON ROOF	-	#4	-	-	-	H		19.83		4	CU-1 - EXTERIOR	-	#8	-	-	-	A		7.81	
5	RTU-1 - ON ROOF	-	#4	-	-	-	H			19.83	6	CU-1 - EXTERIOR	-	#8	-	-	-	A			7.81
7	SPACE ONLY	-	-	-	-	-	-	-			8	ELEVATOR	70/3	#4	-	#8	1-1/4"	M	11.02		
9	SPACE ONLY	-	-	-	-	-	-		-		10	ELEVATOR	-	#4	-	-	-	M		11.02	
11	SPACE ONLY	-	-	-	-	-	-			-	12	ELEVATOR	-	#4	-	-	-	M			11.02
13	PANEL H1	200/3	#3/0	#3/0	#6	2-1/2"	SF	17.26			14	SPACE ONLY (100A FRAME)	-/3	-	-	-	-	-	-		
15	PANEL H1	-	#3/0	-	-	-	SF		16.28		16	SPACE ONLY (100A FRAME)	-	-	-	-	-	-		-	
17	PANEL H1	-	#3/0	-	-	-	SF			13.57	18	SPACE ONLY (100A FRAME)	-	-	-	-	-	-			-
19	PANEL H2	200/3	#3/0	#3/0	#6	2-1/2"	SF	22.43			20	SPACE ONLY (100A FRAME)	-/3	-	-	-	-	-	-		
21	PANEL H2	-	#3/0	-	-	-	SF		19.94		22	SPACE ONLY (100A FRAME)	-	-	-	-	-	-		-	
23	PANEL H2	-	#3/0	-	-	-	SF			19.37	24	SPACE ONLY (100A FRAME)	-	-	-	-	-	-			-
25	SPACE ONLY (200A FRAME)	-/3	-	-	-	-	-	-			26	SPACE ONLY	-	-	-	-	-	-	-		
27	SPACE ONLY (200A FRAME)	-	-	-	-	-	-		-		28	SPACE ONLY	-	-	-	-	-	-		-	
29	SPACE ONLY (200A FRAME)	-	-	-	-	-	-			-	30	SPACE ONLY	-	-	-	-	-	-			-
31	SPACE ONLY (200A FRAME)	-/3	-	-	-	-	-	-			32	SPACE ONLY	-	-	-	-	-	-	-		
33	SPACE ONLY (200A FRAME)	-	-	-	-	-	-		-		34	SPACE ONLY	-	-	-	-	-	-		-	
35	SPACE ONLY (200A FRAME)	-	-	-	-	-	-			-	36	SPACE ONLY	-	-	-	-	-	-			-
37	SPACE ONLY	-	-	-	-	-	-	-			38	SPACE ONLY	-	-	-	-	-	-	-		
39	SPACE ONLY	-	-	-	-	-	-		-		40	SPACE ONLY	-	-	-	-	-	-		-	
41	SPACE ONLY	-	-	-	-	-	-			-	42	SPACE ONLY	-	-	-	-	-	-			-
43	SPD	20/3	#12	#12	#12	3/4"	N	.03			44	SPD - SPACE	-/3	-	-	-	-	-	-		
45	SPD	-	#12	-	-	-	N		.03		46	SPD - SPACE	-	-	-	-	-	-		-	
47	SPD	-	#12	-	-	-	N			.03	48	SPD - SPACE	-	-	-	-	-	-			-

NOTE 1. PROVIDE SHUNT TRIP BREAKER(S) FOR CIRCUIT(S) 8
NOTE 2. CIRCUITS 13,15,17,19,21,23 CAN BE SUBSTITUTED FOR THIS QUANTITY AND SIZE 200A ALUMINUM CONDUCTORS & CONDUIT: (4) #250 MCM AL + (1) #4 AWG AL GND IN 2-1/2" CONDUIT.

PHASE LOAD TOTALS			
	78.38	74.91	71.63

LOADS (KVA)	CONNECTED	DEMAND FACTOR	DEMAND
LIGHTING	8.62	1.25	10.78
REC TO 10 KVA	0	1.0	0
REC REMAINING	0	0.5	0
SPACE HEATING	159.54	1.0	159.54
AIR CONDITIONING	23.43	0.0	0
NON-SEASONAL MOTORS	33.06	1.0	33.06
LARGEST MOTOR	33.07	0.25	8.27
WATER HEATING	0	1.0	0

LOADS (KVA)	CONNECTED	DEMAND FACTOR	DEMAND		
KITCHEN EQUIPMENT	0	1.0	0		
CONTINUOUS	0	1.25	0		
NON-CONTINUOUS	.27	1.0	.27		
DEMAND	0	1.0	0		
TOTAL CONNECTED LOAD	224.9	KVA	270.7	AMPS	
MIN. FEEDER / PANEL CAPACITY	211.9	KVA	255	AMPS	
OVERALL DEMAND FACTOR	0.94				

NEW PANEL HS

VOLTAGE: 480Y/277V
SYSTEM: 3PH, 4W
SOLID NEUTRAL: YES

MAIN: 100A MLO
BUS RATING: 100A
GROUND BUS: YES

INTEGRAL SPD: YES
MOUNTING: SURFACE
INTERRUPT RATING: 35,000 AIC

CKT	LOAD SERVED	BKR	PHASE	NEUT	GND	COND	DMD	L1	L2	L3	CKT	LOAD SERVED	BKR	PHASE	NEUT	GND	COND	DMD	L1	L2	L3
1	EMER EGRESS LTG GROUND FLOOR ADDITION	20/1	#12	#12	#12	1/2"	L	.45			2	EMER EGRESS EXTERIOR CANOPY LTG	20/1	#12	#12	#12	1/2"	L	.08		
3	EMER EGRESS LTG FIRST FLOOR ADDITION	20/1	#12	#12	#12	1/2"	L		.49		4	EMER EGRESS BUILDING MOUNTED LTG	20/1	#12	#12	#12	1/2"	L		.47	
5	EMER EGRESS LTG NEW STAIR S102, S202	20/1	#12	#12	#12	1/2"	L			.23	6	EMER EGRESS EXTERIOR POLE LTG	20/1	#12	#12	#12	1/2"	L			.58
7	EMER EGRESS LTG FIRST FLOOR EXIST BUILD	20/1	#12	#12	#12	1/2"	L	.13			8	SPARE	20/1	-	-	-	-	-	-		
9	EMER EGRESS LTG RM C102, 110, 110A, 110B	20/1	#12	#12	#12	1/2"	L		.26		10	SPARE	20/1	-	-	-	-	-		-	
11	SPARE	20/1	-	-	-	-	-			-	12	SPARE	20/1	-	-	-	-	-			-
13	SPARE	20/1	-	-	-	-	-	-			14	SPARE	20/1	-	-	-	-	-	-		
15	SPARE	20/1	-	-	-	-	-		-		16	SPARE	20/1	-	-	-	-	-		-	
17	SPARE	20/1	-	-	-	-	-			-	18	SPACE ONLY	-	-	-	-	-	-			-
19	SPARE	20/1	-	-	-	-	-	-			20	SPACE ONLY	-	-	-	-	-	-	-		
21	SPACE ONLY	-	-	-	-	-	-		-		22	SPACE ONLY	-	-	-	-	-	-		-	
23	SPACE ONLY	-	-	-	-	-	-			-	24	SPACE ONLY	-	-	-	-	-	-			-
25	SPACE ONLY	-	-	-	-	-	-	-			26	PANEL-LS	25/3	#10	#10	#10	3/4"	SF	1.62		
27	SPACE ONLY	-	-	-	-	-	-		-		28	VIA 15KVA	-	#10	-	-	-	SF		1.63	
29	SPACE ONLY	-	-	-	-	-	-			-	30	XFMR-LS	-	#10	-	-	-	SF			2.05
31	SPD	20/3	#12	#12	#12	3/4"	N	.03			32	SPD - SPACE	-/3	-	-	-	-	-	-		
33	SPD	-	#12	-	-	-	N		.03		34	SPD - SPACE	-	-	-	-	-	-		-	
35	SPD	-	#12	-	-	-	N			.03	36	SPD - SPACE	-	-	-	-	-	-			-

NOTE 1. PROVIDE LOCKABLE BREAKER(S) FOR CIRCUIT(S) 1, 2, 3, 4, 5, 6, 7, 8, 9, 10, 11, 12, 13, 14, 15, 16, 17, 19

PHASE LOAD TOTALS			
	2.31	2.88	2.89

LOADS (KVA)	CONNECTED	DEMAND FACTOR	DEMAND
LIGHTING	2.89	1.25	3.61
REC TO 10 KVA	0	1.0	0
REC REMAINING	0	0.5	0
SPACE HEATING	0	0.0	0
AIR CONDITIONING	0	1.0	0
NON-SEASONAL MOTORS	3.27	1.0	3.27
LARGEST MOTOR	1.18	0.25	.3
WATER HEATING	0	1.0	0

LOADS (KVA)	CONNECTED	DEMAND FACTOR	DEMAND		
KITCHEN EQUIPMENT	0	1.0	0		
CONTINUOUS	1.74	1.25	2.18		
NON-CONTINUOUS	.18	1.0	.18		
DEMAND	0	1.0	0		
TOTAL CONNECTED LOAD	8.1	KVA	9.7	AMPS	
MIN. FEEDER / PANEL CAPACITY	9.5	KVA	11.5	AMPS	
OVERALL DEMAND FACTOR	1.18				

NEW PANEL J

VOLTAGE: 208Y/120V
SYSTEM: 3PH, 4W
SOLID NEUTRAL: YES

MAIN: 200A MLO
BUS RATING: 225A
GROUND BUS: YES

INTEGRAL SPD: YES
MOUNTING: FLUSH
INTERRUPT RATING: 10,000 AIC

CKT	LOAD SERVED	BKR	PHASE	NEUT	GND	COND	DMD	L1	L2	L3	CKT	LOAD SERVED	BKR	PHASE	NEUT	GND	COND	DMD	L1	L2	L3
1	REC CUBICLES OPEN OFFICE 230	20/1	#12	#12	#12	1/2"	R	.18			2	EF-1, EF-2, EF-3 - ON ROOF & ATTIC	20/1	#12	#12	#12	1/2"	M	1.15		
3	REC CUBICLES OPEN OFFICE 230	20/1	#12	#12	#12	1/2"	R		.18		4	WATER HEATER (WHR-1) - PUBLIC TOILET T206	20/1	#12	#12	#12	1/2"	W		1.44	
5	REC CUBICLES OPEN OFFICE 230	20/1	#12	#12	#12	1/2"	R			.18	6	WATER HEATER (WHR-1) - WOMEN TOILET T205	20/1	#12	#12	#12	1/2"	W			1.44
7	REC CUBICLES OPEN OFFICE 230	20/1	#12	#12	#12	1/2"	R	.18			8	WATER HEATER (WHR-1) - MEN TOILET T204	20/1	#12	#12	#12	1/2"	W	1.44		
9	REC CUBICLES OPEN OFFICE 230	20/1	#12	#12	#12	1/2"	R		.18		10	WATER HEATER (WHR-1) - TOILET 218A	20/1	#12	#12	#12	1/2"	W		1.44	
11	REC CUBICLES OPEN OFFICE 230	20/1	#12	#12	#12	1/2"	R			.18	12	REC - ROOF	20/1	#12	#12	#12	1/2"	R			.36
13	REC CUBICLES OPEN OFFICE 230	20/1	#12	#12	#12	1/2"	R	.18			14	HP-1 - ON ROOF, DSS-1 - IT M103	20/2	#12	-	#12	1/2"	A	1.35		
15	REC CUBICLES OPEN OFFICE 230	20/1	#12	#12	#12	1/2"	R		.18		16	HP-1 - ON ROOF, DSS-1 - IT M103	-	#12	-	-	-	A		1.35	
17	REC CUBICLES OPEN OFFICE 230	20/1	#12	#12	#12	1/2"	R			.18	18	REC OFFICE 243	20/1	#12	#12	#12	1/2"	R			.72
19	REC CUBICLES OPEN OFFICE 230	20/1	#12	#12	#12	1/2"	R	.18			20	REC OPEN OFFICE 240	20/1	#12	#12	#12	1/2"	R	.72		
21	REC CUBICLES OPEN OFFICE 240	20/1	#12	#12	#12	1/2"	R		.18		22	REC OPEN OFFICE 240, NEW STAIR S202	20/1	#12	#12	#12	1/2"	R		.54	
23	REC CUBICLES OPEN OFFICE 240	20/1	#12	#12	#12	1/2"	R			.18	24	REC OPEN OFFICE 240	20/1	#12	#12	#12	1/2"	R			.72
25	REC CUBICLES OPEN OFFICE 240	20/1	#12	#12	#12	1/2"	R	.18			26	REC OPEN OFFICE 230	20/1	#12	#12	#12	1/2"	R	.36		
27	REC CUBICLES OPEN OFFICE 240	20/1	#12	#12	#12	1/2"	R		.18		28	REC OPEN OFFICE 230	20/1	#12	#12	#12	1/2"	R		.72	
29	REC CUBICLES OPEN OFFICE 240	20/1	#12	#12	#12	1/2"	R			.18	30	REC OPEN OFFICE 230, STORAGE 233	20/1	#12	#12	#12	1/2"	R			.72
31	REC CUBICLES OPEN OFFICE 240	20/1	#12	#12	#12	1/2"	R	.18			32	REC CONFERENCE ROOM 231	20/1	#12	#12	#12	1/2"	R	.54		
33	REC CUBICLES OPEN OFFICE 240	20/1	#12	#12	#12	1/2"	R		.18		34	REC CONFERENCE ROOM 231	20/1	#12	#12	#12	1/2"	R		.54	
35	REC CUBICLES OPEN OFFICE 240	20/1	#12	#12	#12	1/2"	R			.18	36	REC SIMULATOR FLOOR BOX CONF ROOM 231	20/1	#12	#12	#12	1/2"	R			.18
37	REC CUBICLES OPEN OFFICE 240	20/1	#12	#12	#12	1/2"	R	.18			38	REC SIMULATOR FLOOR BOX CONF ROOM 231	20/1	#12	#12	#12	1/2"	R	.18		
39	REC CUBICLES OPEN OFFICE 240	20/1	#12	#12	#12	1/2"	R		.18		40	DOOR POWER SUPPLIES C204, 230, S202	20/1	#12	#12	#12	1/2"	C		.09	
41	REC CUBICLES OPEN OFFICE 240	20/1	#12	#12	#12	1/2"	R			.18	42	WC-1, WC-2, UR-1 TLT T204, T205	20/1	#12	#12	#12	1/2"	N			.2
43	REC CUBICLES OPEN OFFICE 240	20/1	#12	#12	#12	1/2"	R	.18			44	SPARE	20/1	-	-	-	-	-	-		
45	SPARE	20/1	-	-	-	-	-		-		46	SPARE	20/1	-	-	-	-	-		-	
47	SPARE	20/1	-	-	-	-	-			-	48	SPARE	20/1	-	-	-	-	-			-
49	SPARE	20/1	-	-	-	-	-	-			50	SPARE	20/1	-	-	-	-	-	-		
51	SPARE	20/1	-	-	-	-	-		-		52	SPARE	20/1	-	-	-	-	-		-	
53	SPARE	20/1	-	-	-	-	-			-	54	SPARE	20/1	-	-	-	-	-			-
55	SPD	30/3	#10	#10	#10	3/4"	N	.03			56	SPD - SPACE	-/3	-	-	-	-	-	-		
57	SPD	-	#10	-	-	-	N		.03		58	SPD - SPACE	-	-	-	-	-	-		-	
59	SPD	-	#10	-	-	-	N			.03	60	SPD - SPACE	-	-	-	-	-	-			-

NOTE 1. PROVIDE GFCI RATED BREAKER(S) FOR CIRCUIT(S) 4, 6, 8, 10, 42

PHASE LOAD TOTALS			
	7.21	7.41	5.63

LOADS (KVA)	CONNECTED	DEMAND FACTOR	DEMAND
LIGHTING	0	1.25	0
REC TO 10 KVA	10	1.0	10
REC REMAINING	.26	0.5	.13
SPACE HEATING	0	0.0	0
AIR CONDITIONING	2.7	1.0	2.7
NON-SEASONAL MOTORS	1.15	1.0	1.15
LARGEST MOTOR	2.29	0.25	.57
WATER HEATING	5.76	1.0	5.76

LOADS (KVA)	CONNECTED	DEMAND FACTOR	DEMAND		
KITCHEN EQUIPMENT	0	1.0	0		
CONTINUOUS	.09	1.25	.11		
NON-CONTINUOUS	.29	1.0	.29		
DEMAND	0	1.0	0		
TOTAL CONNECTED LOAD	20.3	KVA	56.3	AMPS	
MIN. FEEDER / PANEL CAPACITY	20.7	KVA	57.5	AMPS	
OVERALL DEMAND FACTOR	1.02				

NEW PANEL K

VOLTAGE: 208Y/120V
SYSTEM: 3PH, 4W
SOLID NEUTRAL: YES

MAIN: 200A MLO
BUS RATING: 225A
GROUND BUS: YES

INTEGRAL SPD: YES
MOUNTING: FLUSH
INTERRUPT RATING: 10,000 AIC

CKT	LOAD SERVED	BKR	PHASE	NEUT	GND	COND	DMD	L1	L2	L3	CKT	LOAD SERVED	BKR	PHASE	NEUT	GND	COND	DMD	L1	L2	L3
1	REC FINGERPRINT 248	20/1	#12	#12	#12	1/2"	R	.9			2	REC CONFERENCE ROOM 244	20/1	#12	#12	#12	1/2"	R	.36		
3	REC PUBLIC LOBBY / WAITING C206	20/1	#12	#12	#12	1/2"	R		.54		4	REC CONFERENCE ROOM 244	20/1	#12	#12	#12	1/2"	R		.36	
5	ELECTRIC WATER COOLER RM C206	20/1	#12	#12	#12	1/2"	N			1	6	REC CONFERENCE ROOM 244	20/1	#12	#12	#12	1/2"	R			.36
7	REC CORRIDOR C205	20/1	#12	#12	#12	1/2"	R	.54			8	REC CONFERENCE ROOM 244	20/1	#12	#12	#12	1/2"	R	.36		
9	REC PRINTER CORRIDOR C205	20/1	#12	#12	#12	1/2"	R		.18		10	REC CONFERENCE ROOM 244	20/1	#12	#12	#12	1/2"	R		.36	
11	REC CORRIDOR C205	20/1	#12	#12	#12	1/2"	R			.54	12	REC CONFERENCE ROOM 244	20/1	#12	#12	#12	1/2"	R			.36
13	REC OBSERVATION 247	20/1	#12	#12	#12	1/2"	R	.72			14	REC CONFERENCE ROOM 244	20/1	#12	#12	#12	1/2"	R	.36		
15	REC INTERVIEW 245	20/1	#12	#12	#12	1/2"	R		.72		16	REC CONFERENCE ROOM 244	20/1	#12	#12	#12	1/2"	R		.36	
17	REC INTERVIEW 246	20/1	#12	#12	#12	1/2"	R			.72	18	REC CONFERENCE ROOM 244	20/1	#12	#12	#12	1/2"	R			.36
19	REC RECEPTION 242	20/1	#12	#12	#12	1/2"	R	.72			20	REC CONFERENCE ROOM 244	20/1	#12	#12	#12	1/2"	R	.36		
21	REC RECEPTION 242	20/1	#12	#12	#12	1/2"	R		.54		22	REC CONFERENCE ROOM 244	20/1	#12	#12	#12	1/2"	R		.72	
23	REC PUBLIC TLT T206	20/1	#12	#12	#12	1/2"	R			.18	24	REC OFFICE 235	20/1	#12	#12	#12	1/2"	R			.72
25	REC OFFICE 241	20/1	#12	#12	#12	1/2"	R	.72			26	REC OFFICE 234	20/1	#12	#12	#12	1/2"	R	.54		
27	REC OFFICE 238	20/1	#12	#12	#12	1/2"	R		.72		28	REC OFFICE 234	20/1	#12	#12	#12	1/2"	R		.54	
29	REC OFFICE 237	20/1	#12	#12	#12	1/2"	R			.72	30	REC M TLT T204, W TLT T205	20/1	#12	#12	#12	1/2"	R			.36
31	REC OFFICE 236	20/1	#12	#12	#12	1/2"	R	.72			32	ELECTRIC WATER COOLER RM 230	20/1	#12	#12	#12	1/2"	N	1		
33	REC CORRIDOR C202	20/1	#12	#12	#12	1/2"	R		.72		34	REC NEW OFFICE 210	20/1	#12	#12	#12	1/2"	R		.72	
35	REC PRINTER CORRIDOR C202	20/1	#12	#12	#12	1/2"	R			.18	36	REC NEW OFFICE 212	20/1	#12	#12	#12	1/2"	R			.72
37	REC NEW OFFICE 223	20/1	#12	#12	#12	1/2"	R	.72			38	REC NEW OFFICE 214	20/1	#12	#12	#12	1/2"	R	.72		
39	REC NEW OFFICE 205	20/1	#12	#12	#12	1/2"	R		.72		40	REC NEW CORRIDOR C202	20/1	#12	#12	#12	1/2"	R		.54	
41	REC NEW CORRIDOR C204, C205	20/1	#12	#12	#12	1/2"	R			.36	42	REC PRINTER NEW CORRIDOR C202	20/1	#12	#12	#12	1/2"	R			.18
43	REC RM 218, 220	20/1	#12	#12	#12	1/2"	R	.36			44	REC NEW OFFICE 213	20/1	#12	#12	#12	1/2"	R	.72		
45	REC NEW TLT 218A	20/1	#12	#12	#12	1/2"	R		.18		46	REC NEW OFFICE 216	20/1	#12	#12	#12	1/2"	R		.72	
47	REC FLOOR BOX CONFERENCE ROOM 244	20/1	#12	#12	#12	1/2"	R			.18	48	REC NEW OFFICE 215	20/1	#12	#12	#12	1/2"	R			.72
49	REC FLOOR BOX CONFERENCE ROOM 244	20/1	#12	#12	#12	1/2"	R	.18			50	REC NEW OFFICE 217	20/1	#12	#12	#12	1/2"	R	.72		
51	SPARE	20/1	-	-	-	-	-		-		52	DOOR POWER SUPPLIES C205, C206, 247	20/1	#12	#12	#12	1/2"	C		.09	
53	SPARE	20/1	-	-	-	-	-			-	54	DOOR POWER SUPPLIES V202.1, V202.2	20/1	#12	#12	#12	1/2"	C			.06
55	SPD	30/3	#10	#10	#10	3/4"	N	.03			56	SPD - SPACE	-/3	-	-	-	-	-	-		
57	SPD	-	#10	-	-	-	N		.03		58	SPD - SPACE	-	-	-	-	-	-		-	
59	SPD	-	#10	-	-	-	N			.03	60	SPD - SPACE	-	-	-	-	-	-			-

NOTE 1. PROVIDE GFCI RATED BREAKER(S) FOR CIRCUIT(S) 5, 32

PHASE LOAD TOTALS			
	10.75	8.76	7.75

LOADS (KVA)	CONNECTED	DEMAND FACTOR	DEMAND
LIGHTING	0	1.25	0
REC TO 10 KVA	10	1.0	10
REC REMAINING	15.02	0.5	7.51
SPACE HEATING	0	0.0	0
AIR CONDITIONING	0	1.0	0
NON-SEASONAL MOTORS	0	1.0	0
LARGEST MOTOR	0	0.25	0
WATER HEATING	0	1.0	0

LOADS (KVA)	CONNECTED	DEMAND FACTOR	DEMAND		
KITCHEN EQUIPMENT	0	1.0	0		
CONTINUOUS	.15	1.25	.19		
NON-CONTINUOUS	2.09	1.0	2.09		
DEMAND	0	1.0	0		
TOTAL CONNECTED LOAD	27.3	KVA	75.7	AMPS	
MIN. FEEDER / PANEL CAPACITY	19.8	KVA	55	AMPS	
OVERALL DEMAND FACTOR	0.73				

SPECTRUM DESIGN
architects | engineers

Plaza Suite 1
10 Church Avenue, SE
Roanoke, VA 24011

540.342.6001
spectrumpc.com

LPA
LAWRENCE PERRY & ASSOCIATES
Consulting Engineers
15 E Salem Avenue SE, Suite 101
Roanoke, Virginia 24011
Ph: (540)-342-1816
Fax: (540)-344-3410
Comm. No.: 25114

© Lawrence Perry and Associates, Inc.

BEDFORD COUNTY SHERIFF'S OFFICE EXPANSION

SPECTRUM DESIGN PROJECT NO.: **24112**

COMMONWEALTH OF VIRGINIA
05/04/2026
WINSTON A. MATTHEWS
Lic. No. 044469
PROFESSIONAL ENGINEER

PROJ. MGR.: **RCH**
CHECKED BY: **WAM**
DRAWN BY: **MAS**

SHEET ISSUE DATE:
05.04.2026

PROJECT PHASE:
BID DOCUMENTS

SHEET REVISIONS:

PLAN NORTH
SITE NORTH

SHEET NAME:
NEW ELECTRICAL PANELS

SHEET NUMBER:
E604

ORIGINAL SIZE: ARCH E1 (30X42) | 5/4/2026 3:29:03 PM
C:\Users\rcch\OneDrive - Lawrence Perry And Associates\Documents\25114 - Bedford Sheriff's Office - ELEC - RCH_revwithQPANELS.rvt

NEW PANEL EHMDP

VOLTAGE: 480Y/277V
SYSTEM: 3PH, 4W
SOLID NEUTRAL: YES

MAIN: 800A MLO
BUS RATING: 800A
GROUND BUS: YES

INTEGRAL SPD: YES
MOUNTING: FLUSH
INTERRUPT RATING: 65,000 AIC

CKT	LOAD SERVED	BKR	PHASE	NEUT	GND	COND	DMD	L1	L2	L3	CKT	LOAD SERVED	BKR	PHASE	NEUT	GND	COND	DMD	L1	L2	L3
1	PANEL ELMDP VIA XFMR-300KVA	500/3	250	-	#1/0	(2) 3"	SF	43.74			2	PANEL HDP	600/3	350	350	#1	(2) 4"	SF	78.38		
3	PANEL ELMDP VIA XFMR-300KVA	-	250	-	-	-	SF		36.14		4	PANEL HDP	-	350	-	-	-	SF		74.91	
5	PANEL ELMDP VIA XFMR-300KVA	-	250	-	-	-	SF			31.72	6	PANEL HDP	-	350	-	-	-	SF			71.63
7	SPARE	20/1	-	-	-	-	-	-			8	SPARE	20/1	-	-	-	-	-	-		
9	SPARE	20/1	-	-	-	-	-		-		10	SPARE	20/1	-	-	-	-	-		-	
11	SPACE	-	-	-	-	-	-			-	12	SPACE	-	-	-	-	-	-			-
13	SPACE	-	-	-	-	-	-	-			14	SPACE	-	-	-	-	-	-	-		
15	SPACE	-	-	-	-	-	-		-		16	SPACE	-	-	-	-	-	-		-	
17	SPACE	-	-	-	-	-	-			-	18	SPACE	-	-	-	-	-	-			-
19	SPD	30/3	#10	#10	#10	3/4"	N	.03			20	SPD - SPACE	-/3	-	-	-	-	-	-		
21	SPD	-	#10	-	-	-	N		.03		22	SPD - SPACE	-	-	-	-	-	-		-	
23	SPD	-	#10	-	-	-	N			.03	24	SPD - SPACE	-	-	-	-	-	-			-

NOTE 1. CIRCUITS 1,3,5 CAN BE SUBSTITUTED FOR THIS QUANTITY AND SIZE 500A ALUMINUM CONDUCTORS & CONDUIT: 2 SETS OF [(4) #350 MCM AL] IN (2) 3" CONDUITS, (1) #3/0 AWG AL GEC IN 1" CONDUIT, AND (1) #3/0 AWG AL BONDING JUMPER IN 1" CONDUIT.
NOTE 2. CIRCUITS 2,4,6 CAN BE SUBSTITUTED FOR THIS QUANTITY AND SIZE 600A ALUMINUM CONDUCTORS & CONDUIT: 2 SETS OF [(4) #500 MCM AL + (1) #2/0 AWG AL GND] IN (2) 4" CONDUITS.

PHASE LOAD TOTALS	122.15	111.08	103.38

LOADS (KVA)	CONNECTED	DEMAND FACTOR	DEMAND
LIGHTING	8.62	1.25	10.78
REC TO 10 KVA	10	1.0	10
REC REMAINING	53.9	0.5	26.95
SPACE HEATING	159.54	1.0	159.54
AIR CONDITIONING	26.37	0.0	0
NON-SEASONAL MOTORS	34.21	1.0	34.21
LARGEST MOTOR	33.07	0.25	8.27
WATER HEATING	12.96	1.0	12.96

LOADS (KVA)	CONNECTED	DEMAND FACTOR	DEMAND	
KITCHEN EQUIPMENT	16.63	0.65	10.81	
CONTINUOUS	5.75	1.25	7.19	
NON-CONTINUOUS	8.63	1.0	8.63	
DEMAND	0	1.0	0	
TOTAL CONNECTED LOAD	336.6	KVA	405.1	AMPS
MIN. FEEDER / PANEL CAPACITY	289.3	KVA	348.2	AMPS
OVERALL DEMAND FACTOR	0.86			

PANEL EHMDP LOAD SUMMARY:

A. NEW PANEL LOADS:
   A. THE NEW BUILDING ADDITION LOAD FOR THIS EHMDP PANEL IS 348.2 AMPS / 289.3 KVA
   B. EXISTING BUILDING METERED LOAD OF EXISTING PANEL MDP THAT IS BEING ADDED TO NEW PANEL ELMDP IS 88.1 KVA @ 480V 3-PHASE = 106 AMPS.
   C. TOTAL LOAD OF NEW PANEL EHMDP IS 454.2 AMPS / 377.4 KVA.
B. NEW PANEL EHMDP IS FED FROM NEW ATS-EH VIA A 800A FEEDER AND 800A BREAKER IN THE ATS-EH, WHICH IS FED FROM NEW BEDFORD SERVICE TRANSFORMER. THE TOTAL LOAD ON THE NEW PANEL IS 454.2 AMPS, WHICH IS WITHIN THE 800 AMP BUS RATING OF PANEL EHMDP AND WITHIN THE RATING OF THE FEEDER AND BREAKER POWERING PANEL EHMDP.

NEW PANEL ELMDP

VOLTAGE: 208Y/120V
SYSTEM: 3PH, 4W
SOLID NEUTRAL: YES

MAIN: 1000A MCB
BUS RATING: 1000A
GROUND BUS: YES

INTEGRAL SPD: YES
MOUNTING: FLUSH
INTERRUPT RATING: 35,000 AIC

CKT	LOAD SERVED	BKR	PHASE	NEUT	GND	COND	DMD	L1	L2	L3	CKT	LOAD SERVED	BKR	PHASE	NEUT	GND	COND	DMD	L1	L2	L3
1	SPARE	20/1	-	-	-	-	-				2	PANEL MDP	800/3	600	600	#1/0	(2) 4"	SF	43.71		
3	SPARE	20/1	-	-	-	-	-		-		4	PANEL MDP	-	600	-	-	-	SF		36.11	
5	SPARE	20/1	-	-	-	-	-			-	6	PANEL MDP	-	600	-	-	-	SF			31.69
7	SPARE	20/1	-	-	-	-	-	-			8	SPARE	20/1	-	-	-	-	-	-		
9	SPARE	20/1	-	-	-	-	-		-		10	SPARE	20/1	-	-	-	-	-		-	
11	SPACE	-	-	-	-	-	-			-	12	SPACE	-	-	-	-	-	-			-
13	SPACE	-	-	-	-	-	-	-			14	SPACE	-	-	-	-	-	-	-		
15	SPACE	-	-	-	-	-	-		-		16	SPACE	-	-	-	-	-	-		-	
17	SPACE	-	-	-	-	-	-			-	18	SPACE	-	-	-	-	-	-			-
19	SPD	30/3	#10	#10	#10	3/4"	N	.03			20	SPD - SPACE	-/3	-	-	-	-	-	-		
21	SPD	-	#10	-	-	-	N		.03		22	SPD - SPACE	-	-	-	-	-	-		-	
23	SPD	-	#10	-	-	-	N			.03	24	SPD - SPACE	-	-	-	-	-	-			-

NOTE 1. CIRCUITS 2,4,6 CAN BE SUBSTITUTED FOR THIS QUANTITY AND SIZE 800A ALUMINUM CONDUCTORS & CONDUIT: 3 SETS OF [(4) #400 MCM CU + (1) #3/0 AWG CU GND] IN (3) 4" CONDUITS.

PHASE LOAD TOTALS	43.74	36.14	31.72

LOADS (KVA)	CONNECTED	DEMAND FACTOR	DEMAND
LIGHTING	0	1.25	0
REC TO 10 KVA	10	1.0	10
REC REMAINING	53.9	0.5	26.95
SPACE HEATING	0	0.0	0
AIR CONDITIONING	2.94	1.0	2.94
NON-SEASONAL MOTORS	1.15	1.0	1.15
LARGEST MOTOR	2.29	0.25	.57
WATER HEATING	12.96	1.0	12.96

LOADS (KVA)	CONNECTED	DEMAND FACTOR	DEMAND	
KITCHEN EQUIPMENT	16.63	0.65	10.81	
CONTINUOUS	5.75	1.25	7.19	
NON-CONTINUOUS	8.27	1.0	8.27	
DEMAND	0	1.0	0	
TOTAL CONNECTED LOAD	111.6	KVA	310	AMPS
MIN. FEEDER / PANEL CAPACITY	80.8	KVA	224.6	AMPS
OVERALL DEMAND FACTOR	0.72			

PANEL ELMDP LOAD SUMMARY:

1. NEW PANEL LOADS:
   A. THE NEW BUILDING ADDITION LOAD FOR THIS ELMDP PANEL IS 224.6 AMPS / 80.8 KVA
   B. EXISTING BUILDING METERED LOAD OF EXISTING PANEL MDP THAT IS BEING ADDED TO NEW PANEL ELMDP IS 244.8 AMPS / 88.1 KVA
   C. TOTAL LOAD OF NEW PANEL ELMDP IS 469.4 AMPS / 168.9 KVA.
2. NEW PANEL ELMDP IS FED FROM NEW 300K TRANSFORMER VIA A 1000A FEEDER ON THE PRIMARY SIDE OF THE TRANSFORMER. THIS 300 KVA TRANSFORMER IS FED FROM NEW PANEL EHMDP VIA A 500A BREAKER AND A 500A FEEDER. THE TOTAL LOAD ON THE NEW PANEL IS 469.4 AMPS, WHICH IS WITHIN THE 1000A MAIN CIRCUIT BREAKER IN PANEL ELMDP AND WITHIN THE RATING OF THE FEEDERS, 300 KVA TRANSFORMER, AND THE BREAKER IN PANEL EHMDP FEEDING THE TRANSFORMER AND THIS PANEL ELMDP.

NEW PANEL LS

VOLTAGE: 208Y/120V
SYSTEM: 3PH, 4W
SOLID NEUTRAL: YES

MAIN: 50A MCB
BUS RATING: 100A
GROUND BUS: YES

INTEGRAL SPD: YES
MOUNTING: SURFACE
INTERRUPT RATING: 10,000 AIC

CKT	LOAD SERVED	BKR	PHASE	NEUT	GND	COND	DMD	L1	L2	L3	CKT	LOAD SERVED	BKR	PHASE	NEUT	GND	COND	DMD	L1	L2	L3
1	NEW ELEVATOR CAB LIGHTS	15/1	#12	#12	#12	1/2"	L	.2			2	HANDICAP MOTORIZED DOORS 1ST FLOOR	20/1	#12	#12	#12	1/2"	M	1.39		
3	EXSITING FACP CORRIDOR C101	20/1	#12	#12	#12	1/2"	C		.9		4	HANDICAP MOTORIZED DOORS GND FLOOR	20/1	#12	#12	#12	1/2"	M		.7	
5	NEW FIRE ALARM NAC PANEL NEW MECH M102	20/1	#12	#12	#12	1/2"	C			.84	6	SUMP PUMP CONTROL PANEL MECH M102	20/1	#12	#12	#12	1/2"	M			1.18
7	SPARE	20/1	-	-	-	-	-	-			8	SPARE	20/1	-	-	-	-	-	-		
9	SPARE	20/1	-	-	-	-	-		-		10	SPARE	20/1	-	-	-	-	-		-	
11	SPARE	20/1	-	-	-	-	-			-	12	SPARE	20/1	-	-	-	-	-			-
13	SPACE ONLY	-	-	-	-	-	-	-			14	SPACE ONLY	-	-	-	-	-	-	-		
15	SPACE ONLY	-	-	-	-	-	-		-		16	SPACE ONLY	-	-	-	-	-	-		-	
17	SPACE ONLY	-	-	-	-	-	-			-	18	SPACE ONLY	-	-	-	-	-	-			-
19	SPD	20/3	#12	#12	#12	3/4"	N	.03			20	SPD - SPACE	-/3	-	-	-	-	-	-		
21	SPD	-	#12	-	-	-	N		.03		22	SPD - SPACE	-	-	-	-	-	-		-	
23	SPD	-	#12	-	-	-	N			.03	24	SPD - SPACE	-	-	-	-	-	-			-

NOTE 1. PROVIDE LOCKABLE BREAKER(S) FOR CIRCUIT(S) 1, 2, 3, 4, 5, 6, 7, 8, 9, 10, 11, 12

PHASE LOAD TOTALS	1.62	1.63	2.05

LOADS (KVA)	CONNECTED	DEMAND FACTOR	DEMAND
LIGHTING	.2	1.25	.25
REC TO 10 KVA	0	1.0	0
REC REMAINING	0	0.5	0
SPACE HEATING	0	0.0	0
AIR CONDITIONING	0	1.0	0
NON-SEASONAL MOTORS	3.27	1.0	3.27
LARGEST MOTOR	1.18	0.25	.29
WATER HEATING	0	1.0	0

LOADS (KVA)	CONNECTED	DEMAND FACTOR	DEMAND	
KITCHEN EQUIPMENT	0	1.0	0	
CONTINUOUS	1.74	1.25	2.18	
NON-CONTINUOUS	.09	1.0	.09	
DEMAND	0	1.0	0	
TOTAL CONNECTED LOAD	5.3	KVA	14.7	AMPS
MIN. FEEDER / PANEL CAPACITY	6.1	KVA	16.9	AMPS
OVERALL DEMAND FACTOR	1.15			

SPECTRUM DESIGN
architects | engineers

Plaza Suite 1
10 Church Avenue, SE
Roanoke, VA 24011

540.342.6001
spectrumpc.com

LPA
LAWRENCE PERRY & ASSOCIATES
Consulting Engineers

15 E Salem Avenue SE, Suite 101
Roanoke, Virginia 24011

Ph: (540) 342-1816
Fax: (540) 344-3410

Comm. No.: 25114

© Lawrence Perry and Associates, Inc.

BEDFORD COUNTY SHERIFF'S OFFICE EXPANSION

SPECTRUM DESIGN PROJECT NO.: **24112**

COMMONWEALTH OF VIRGINIA
05/04/2026
WINSTON A. MATTHEWS
Lic. No. 044469
PROFESSIONAL ENGINEER

PROJ. MGR.:	CHECKED BY:	DRAWN BY:
RCH	WAM	MAS

SHEET ISSUE DATE:
05.04.2026

PROJECT PHASE:
BID DOCUMENTS

SHEET REVISIONS:

PLAN NORTH SITE NORTH

SHEET NAME:
NEW ELECTRICAL PANELS

SHEET NUMBER:
E605

ORIGINAL SIZE: ARCH E1 [30X42] | 3/4/2026 3:39:03 PM
C:\Users\mcp\OneDrive - Lawrence Perry And Associates\Documents\25114 - Bedford Sheriff's Office - EEC - R24_mcphCPWn5.rvt